bürkert
FLUID CONTROL SYSTEMS

Direct-acting 2-way standard solenoid control valve

- Excellent range
- Very good response
- Compact valve design
- Orifice sizes 0.8 ... 6 mm
- Optional: Explosion-protected coil

Product variants described in the data sheet may differ from the product presentation and description.

Can be combined with

Type 8605
PWM control electronics for electromagnetic proportional valves

Type 2518
Cable plug, form A according to DIN EN 175301-803

Type 8611
eCONTROL – Universal controller

Type description

The direct-acting solenoid control valve Type 2873 is used as the regulating unit in control loops. Due to an elastomeric seat seal the valve closes tight (integrated shut-off function), up to the DN specific nominal pressure. The plunger of the valve is assembled frictionless, which leads to an extraordinary adjustment characteristic. This valve is particularly suitable for demanding control tasks (high control range, dry gases, etc.).

valvesgo.com

DTS 1000173854 EN Version: T Status: RL (released | freigegeben | valide) printed: 22.01.2026

© Christian Bürkert GmbH & Co. KG, Subject to alteration

valvesgo.com

Table of contents

1. General technical data 3

2. Circuit functions 3

3. Approvals and conformities 4

3.1. General notes 4
3.2. Conformity 4
3.3. Standards 4
3.4. Explosion protection 4
3.5. North America (USA/Canada) 4
3.6. Foods and beverages/Hygiene 4

4. Materials 5

4.1. Bürkert resistApp 5

5. Dimensions 5

5.1. Threaded version 5
5.2. Sub-base version 6
5.3. ATEX/IECEx version 7

6. Performance specifications 7

6.1. Flow characteristic 7
Determination of the K_V value 7
6.2. Exemplary characteristic curve of a proportional valve 8

7. Product operation 8

7.1. Control unit 8

8. Ordering information 9

8.1. Bürkert eShop 9
8.2. Recommendation regarding product selection 9
8.3. Bürkert product filter 9
8.4. Bürkert Product Enquiry Form 9
8.5. Ordering chart 10
Standard version 10
Version with approvals 11
Version for higher differential pressures 12
8.6. Ordering chart accessories 13
Cable plug Type 2518, form A according to DIN EN 175301 - 803 13
Control electronics Type 8605 for proportional valves 13

DTS 1000173854 EN Version: T Status: RL (released | freigegeben | valide) printed: 22.01.2026

valvesgo.com

valvesgo.com

1. General technical data

Product properties	
Dimensions	Further information can be found in chapter "5. Dimensions" on page 5.
Material	
Seal	FKM, EPDM
Body	Brass, stainless steel
Circuit function	A Further information can be found in chapter "2. Circuit functions" on page 3.
Performance data	
Typical values of positioning behaviour [1.)]	
Hysteresis	< 5 %
Repeat accuracy	< 0.5 % FS [2.)]
Response sensitivity	< 0.25 % FS [2.)]
Setting range	1:200
Actuating time (10...90 %)	< 20 ms
Pressure range [3.)]	0...16 bar
Duty cycle	100 % continuous operation
Electrical data	
Operating voltage	24 V DC (at 5 W and 24 V coil) (12 V on request)
Power consumption	Max. 9 W
Maximum coil current [4.)]	420 mA (at 9 W and 24 V coil)
PWM frequency [5.)]	1200 Hz
Medium data	
Operating medium	Neutral gases, liquids on request
Medium temperature	- 10 °C...+ 90 °C (with FKM) - 30 °C...+ 90 °C (with EPDM)
Viscosity	Max. 21 mm^2/s (21 cSt)
Product connections	
Electrical connection	Cable plug Type 2518, form A according to DIN EN 175301 - 803 Further information can be found in chapter "Cable plug Type 2518, form A according to DIN EN 175301 - 803" on page 13.
Port connection size	Sub-base, G ⅛, G ¼, NPT ⅛, NPT ¼, others on request
Approvals and conformities	
Degree of protection	IP65
Explosion protection	Further information can be found in chapter "3.4. Explosion protection" on page 4.
North America (USA/Canada)	Further information can be found in chapter "3.5. North America (USA/Canada)" on page 4.
Foods and beverages/Hygiene	Further information can be found in chapter "3.6. Foods and beverages/Hygiene" on page 4.
Environment and installation	
Installation position	As required, preferably with actuator upright
Ambient temperature	Max. + 55 °C

1.) Characteristic data of control behaviour depends on process conditions.
2.) With flow measurement
3.) Pressure data: overpressure to atmospheric pressure, depending on nominal diameter, tightness seal or nominal pressure
4.) Maximum value: value depends on operating pressure
5.) PWM: pulse-width modulation

2. Circuit functions

Symbol	Description
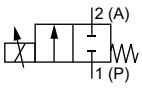	**Circuit function A (CF A)** 2/2-way solenoid proportional control valve Direct-acting Normally closed

DTS 1000173854 EN Version: T Status: RL (released | freigegeben | valide) printed: 22.01.2026

valvesgo.com

3. Approvals and conformities

3.1. General notes

- The approvals and conformities listed below must be stated when making enquiries. This is the only way to ensure that the product complies with all required specifications.
- Not all available variants can be supplied with the below mentioned approvals or conformities.

3.2. Conformity

In accordance with the Declaration of conformity, the product is compliant with the EU Directives.

3.3. Standards

The applied standards which are used to demonstrate compliance with the EU Directives are listed in the EU-Type Examination Certificate and/or the EU Declaration of Conformity.

3.4. Explosion protection

Approval	Description
	Optional: Explosion protection **ATEX:** II 2 G Ex mb IIC T4...T5 Gb II 2 D Ex mb IIIC T130 °C Db **IECEx:** Ex mb IIC T4...T5 Gb Ex mb IIIC T130 °C Db

3.5. North America (USA/Canada)

Approval	Description
	Optional: UL Recognized for the USA [1.)] The products are UL Recognized for the USA according to: • UL 429 (Electrically operated valves)

1.) This device is intended to be used with a NEC Class 2 power source or NEC Class 2 transformer in accordance with UL1310 or UL1585.

3.6. Foods and beverages/Hygiene

Conformity	Description
USP	**United States Pharmacopeial Convention (USP) (valid for the variable code PL04)** All wetted materials are biocompatible according to the manufacturer's declaration.
FDA	**FDA – Code of Federal Regulations (valid for the variable code PL02, PL03)** All wetted materials are compliant with the Code of Federal Regulations published by the FDA (Food and Drug Administration, USA) according to the manufacturer's declaration.
	EC Regulation 1935/2004 of the European Parliament and of the Council (valid for the variable code PL01, PL02) All wetted materials are compliant with EC Regulation 1935/2004/EC according to the manufacturer's declaration.

DTS 1000173854 EN Version: T Status: RL (released | freigegeben | valide) printed: 22.01.2026

valvesgo.com

4. Materials

4.1. Bürkert resistApp

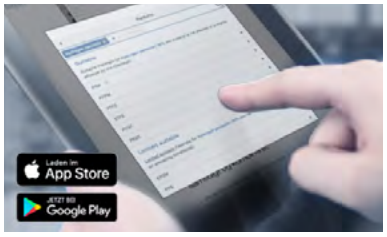

Bürkert resistApp – Chemical resistance chart

You want to ensure the reliability and durability of the materials in your individual application case? Verify your combination of media and materials on our website or in our resistApp.

Start chemical resistance check

5. Dimensions

5.1. Threaded version

Note:
Dimensions in mm

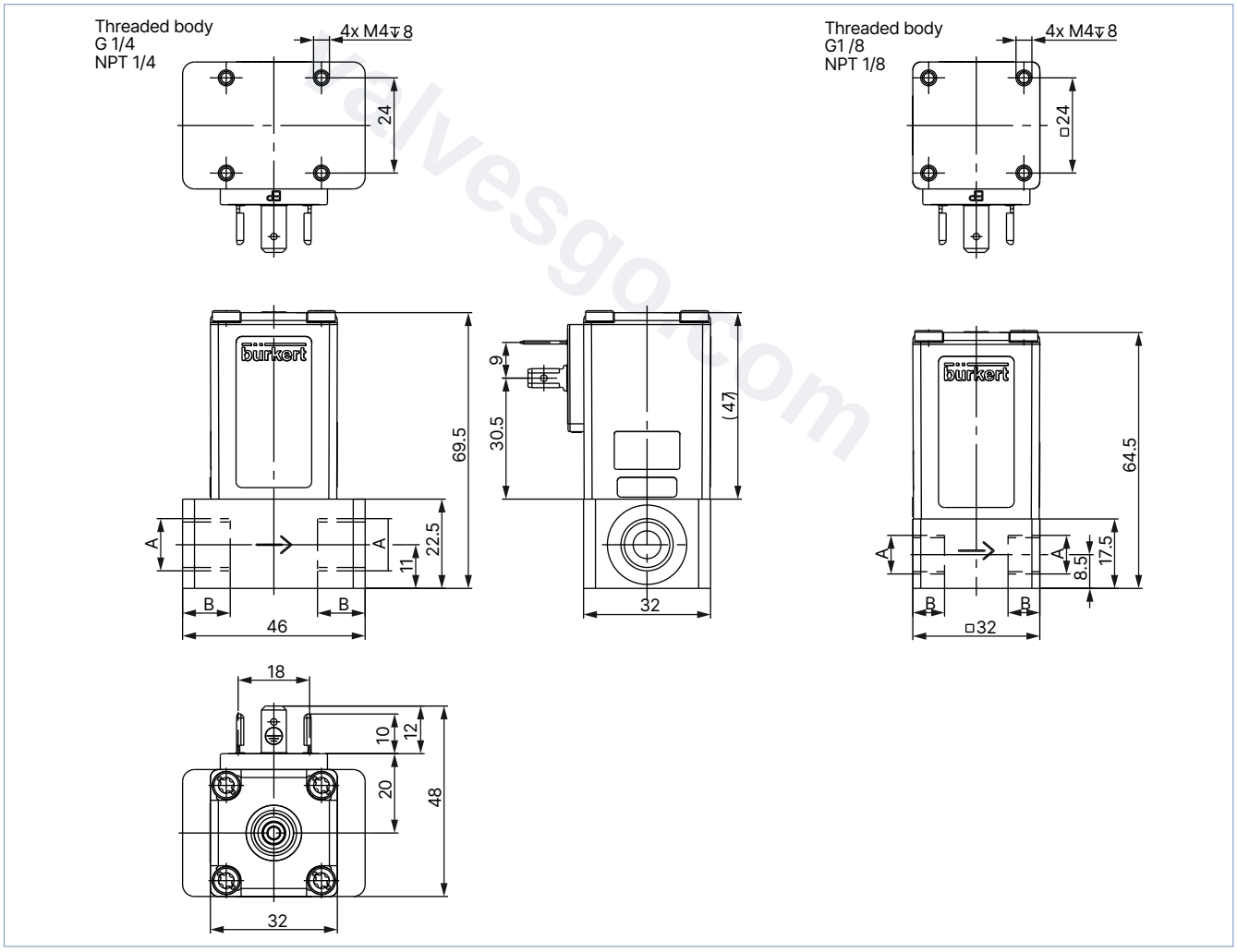

Port connection	A	B
Thread	G ¼	12
	G ⅛	8
	NPT ¼	10
	NPT ⅛	7

DTS 1000173854 EN Version: T Status: RL (released | freigegeben | valide) printed: 22.01.2026

valvesgo.com

5.2. Sub-base version

Note:
Dimensions in mm

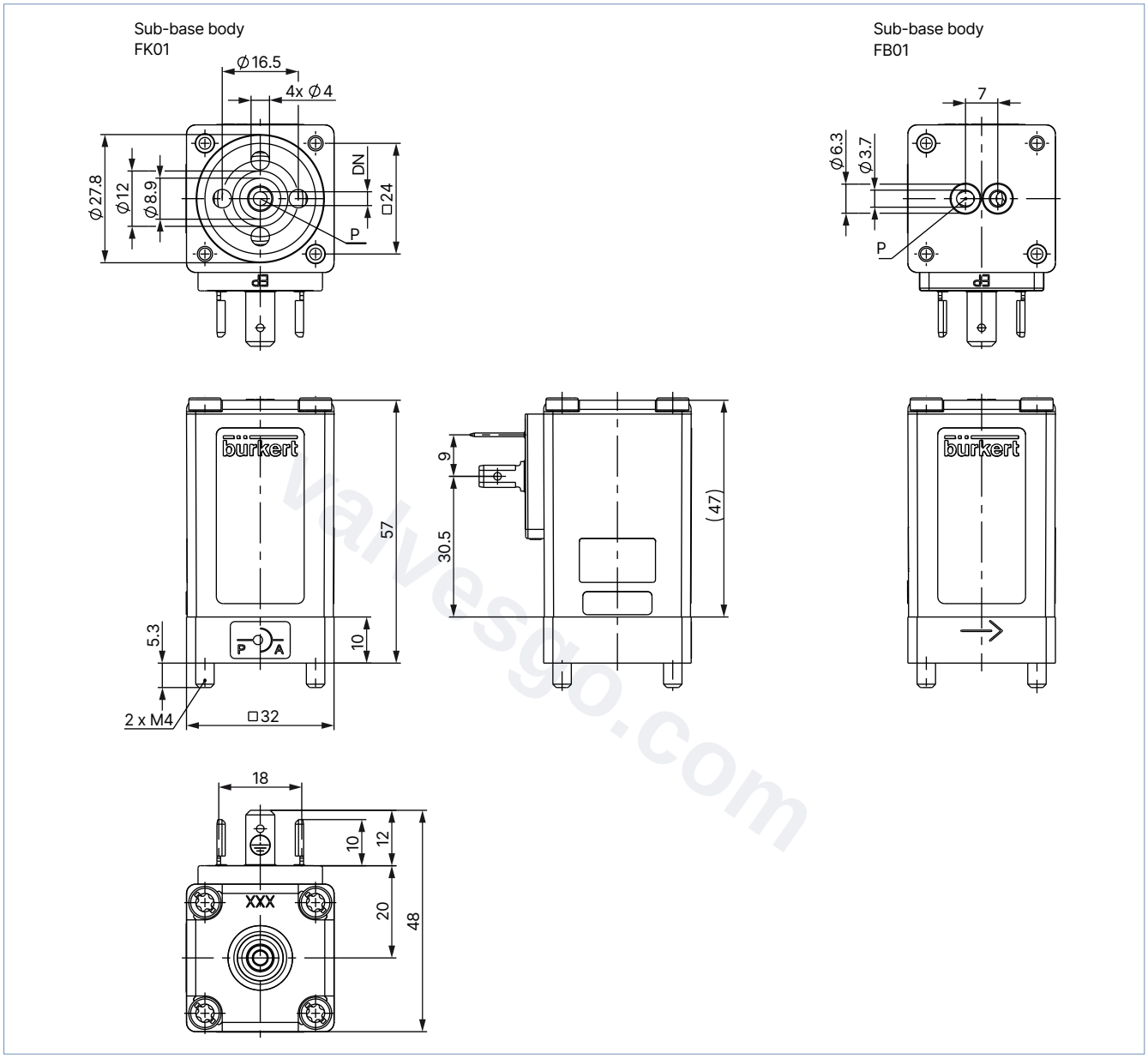

DTS 1000173854 EN Version: T Status: RL (released | freigegeben | valide) printed: 22.01.2026

valvesgo.com

5.3. ATEX/IECEx version

Note:
Dimensions in mm

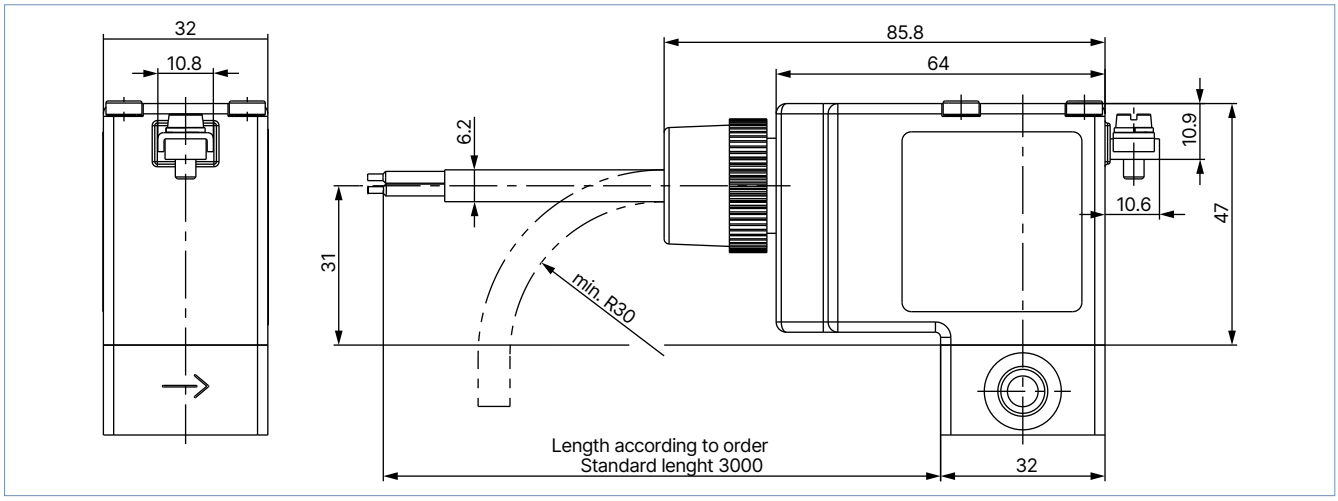

6. Performance specifications

6.1. Flow characteristic

Determination of the K_V value

Pressure drop	K_V value for liquids [m³/h]	K_V value for gases [m³/h]
Sub-critical $p_2 > \frac{p_1}{2}$	$= Q\sqrt{\frac{\rho}{1000\,\Delta p}}$	$= \frac{Q_N}{514}\sqrt{\frac{T_1\,\rho_N}{p_2\,\Delta p}}$
Supercritical $p_2 < \frac{p_1}{2}$	$= Q\sqrt{\frac{\rho}{1000\,\Delta p}}$	$= \frac{Q_N}{257\,p_1}\sqrt{T_1\,\rho_N}$

Value	Description	Unit
K_V	Flow coefficient	[m³/h] 1.)
Q_N	Standard flow rate	[m_N^3/h] 2.)
p_1	Inlet pressure	[bar] 3.)
p_2	Outlet pressure	[bar] 3.)
Δp	Differential pressure p_1...p_2	[bar]
ρ	Density	[kg/m³]
ρ_N	Standard density	[kg/m³]
T_1	Medium temperature	[(273+t)K]

1.) Measured for water, Δp = 1 bar, over the value
2.) At reference conditions 1.013 bar and 0 °C (273 K)
3.) Absolute pressure

DTS 1000173854 EN Version: T Status: RL (released | freigegeben | valide) printed: 22.01.2026

valvesgo.com

6.2. Exemplary characteristic curve of a proportional valve

Note:
The dimensioning of the nominal diameter is very important for proportional valves to function properly within the application. The nominal diameter must be selected so that, on the one hand, the desired flow range is achieved and, on the other hand, when the valve is fully open, a sufficient portion of the total pressure drop occurs across the valve.

Reference value: $\Delta p_{valve} > 25\,\%$ of the total pressure drop

Otherwise, an ideal, linear valve characteristic is deformed into a curved system characteristic.

If the differential pressure (difference between inlet and outlet pressure) exceeds half the value of the nominal pressure discontinuities may occur.

For that reason take advantage of Bürkert competent engineering services during the planning phase.

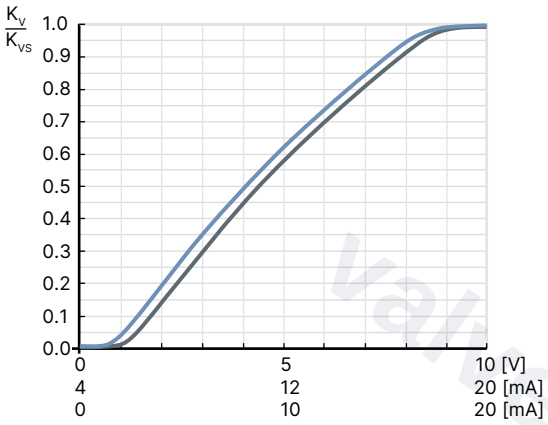

7. Product operation

7.1. Control unit

Valve control takes place through a PWM signal (pulse-width modulation). The duty cycle of the PWM signal determines the coil current and hence the position of the plunger.

The Bürkert control electronics Type 8605 (see data sheet **Type 8605** ▶) converts an analogue signal to a reference value corresponding to the valve type PWM signal and provides additional functions such as temperature compensation (coil heating), ramp function and the adjustment of minimum and maximum duty cycle/coil current for the control range.

Please note the sizing comments for such a control valve in chapter **"6.2. Exemplary characteristic curve of a proportional valve" on page 8**.

DTS 1000173854 EN Version: T Status: RL (released | freigegeben | valide) printed: 22.01.2026

valvesgo.com

8. Ordering information

8.1. Bürkert eShop

Bürkert eShop – Easy ordering and quick delivery

You want to find your desired Bürkert product or spare part quickly and order directly? Our online shop is available for you 24/7. Sign up and enjoy all the benefits.

Order online now

8.2. Recommendation regarding product selection

Note:

- Use the product enquiry form (see "8.4. Bürkert Product Enquiry Form" on page 9) for information about the device layout and send it to us after completion.
- Please note the chapter "6.2. Exemplary characteristic curve of a proportional valve" on page 8 on product selection.

8.3. Bürkert product filter

Bürkert product filter – Get quickly to the right product

You want to select products comfortably based on your technical requirements?
Use the Bürkert product filter and find suitable articles for your application quickly and easily.

Try out our product filter

8.4. Bürkert Product Enquiry Form

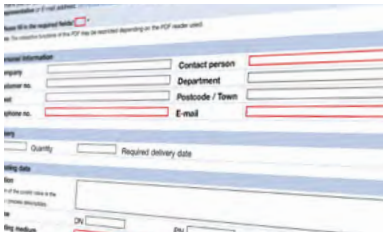

Bürkert Product Enquiry Form – Your enquiry quickly and compactly

Would you like to make a specific product enquiry based on your technical requirements? Use our Product Enquiry Form for this purpose. There you will find all the relevant information for your Bürkert contact. This will enable us to provide you with the best possible advice.

Fill out the form now

DTS 1000173854 EN Version: T Status: RL (released | freigegeben | valide) printed: 22.01.2026

valvesgo.com

8.5. Ordering chart

Standard version

Note:

- All valves with FKM seals
- Please note that the cable plug must be ordered separately, see "Cable plug Type 2518, form A according to DIN EN 175301 - 803" on page 13 or separate data sheet for **Type 2518** ▶.

Circuit function	Port connection	Orifice	K_{VS} value water 1.)	Nominal pressure 2.)	Maximum differential pressure	Article no. Brass body	Article no. Stainless steel body
		[mm]	[m³/h]	[bar]	[bar]		
CF A 2/2-way solenoid proportional control valve Direct-acting Normally closed 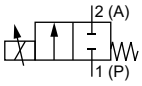 	Sub-base FK01	0.8	0.018	16	8	234291	234306
	G ⅛		0.018	16	8	234289	234305
	NPT ⅛		0.018	16	8	236229	236230
	Sub-base FK01	1.2	0.040	12	6	234293	234308
	G ⅛		0.040	12	6	234292	234307
	NPT ⅛		0.040	12	6	236231	236232
	Sub-base FK01	1.5	0.060	10	5	234295	234310
	G ⅛		0.060	10	5	234294	234309
	NPT ⅛		0.060	10	5	236233	236234
	Sub-base FK01	2.0	0.100	8	4	234298	234313
	G ⅛		0.100	8	4	234296	234311
	NPT ⅛		0.100	8	4	236235	236236
	G ¼		0.100	8	4	234297	234312
	NPT ¼		0.100	8	4	236237	236238
	Sub-base FK01	2.5	0.150	5	2.5	234300	234315
	G ¼		0.150	5	2.5	234299	234314
	NPT ¼		0.150	5	2.5	236239	236241
	Sub-base FK01	3.0	0.220	3.5	1.75	234302	234317
	G ¼		0.220	3.5	1.75	234301	234316
	NPT ¼		0.220	3.5	1.75	236242	236243
	Sub-base FK01	4.0	0.320	2	1	234304	234319
	G ¼		0.320	2	1	234303	234318
	NPT ¼		0.320	2	1	236244	236245

1.) Measurement at + 20 °C, 1 bar pressure differential over a fully opened valve.

2.) Pressure data: overpressure to atmospheric pressure. If the differential pressure between the inlet and outlet pressure of the valve is greater than half of the nominal pressure, discontinuities in the valve characteristic curve are possible.

DTS 1000173854 EN Version: T Status: RL (released | freigegeben | valide) printed: 22.01.2026

valvesgo.com

Version with approvals

Note:

- All valves with FKM seals and ATEX version with 3 m connection cable.
- Please note that the cable plug must be ordered separately, see "Cable plug Type 2518, form A according to DIN EN 175301-803" on page 13 or separate data sheet for **Type 2518** ▶.
- Refer to chapter "3. Approvals and conformities" on page 4 for more information about the approvals.

Circuit function	Port connection 1.)	Orifice	Approvals	K_{vs}-value water	Nominal pressure 2.)	Maximum differential pressure	Article no. Brass body	Article no. Stainless steel body
		[mm]		[m³/h]	[bar]	[bar]		
CF A 2/2-way solenoid proportional control valve Direct-acting Normally closed 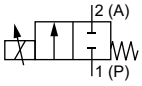	G ⅛	0.8	UR	0.018	16	8	274944	274960
	NPT ⅛			0.018	16	8	274945	274961
	G ⅛		ATEX/IECEx	0.018	8	4	304473	o. r.
	G ⅛	1.2	UR	0.040	12	6	274946	274962
	NPT ⅛			0.040	12	6	274947	274963
	G ⅛		ATEX/IECEx	0.040	6	3	304474	o. r.
	G ⅛	1.5	UR	0.060	10	5	274948	274964
	NPT ⅛			0.060	10	5	274949	274965
	G ⅛		ATEX/IECEx	0.060	6	3	304475	o. r.
	G ⅛	2.0	UR	0.100	8	4	274950	274966
	NPT ⅛			0.100	8	4	274951	274967
	G ⅛		ATEX/IECEx	0.100	6	3	304476	o. r.
	G ¼		UR	0.100	8	4	274952	274968
	NPT ¼			0.100	8	4	274953	274969
	G ¼	2.5	UR	0.150	5	2.5	274954	274970
	NPT ¼			0.150	5	2.5	274955	274971
	G ¼		ATEX/IECEx	0.150	3	1.5	304470	o. r.
	G ¼	3.0	UR	0.220	3.5	1.75	274956	274972
	NPT ¼			0.220	3.5	1.75	274957	274973
	G ¼		ATEX/IECEx	0.220	2	1	304477	o. r.
	G ¼	4.0	UR	0.320	2	1	274958	274974
	NPT ¼			0.320	2	1	274959	274975
	G ¼		ATEX/IECEx	0.320	1	0.5	304472	o. r.

o. r. = on request

1.) Port connection: others on request

DTS 1000173854 EN Version: T Status: RL (released | freigegeben | valide) printed: 22.01.2026

valvesgo.com

Version for higher differential pressures

Note:

- All valves with FKM seals
- Other connection variants (Sub-base, NPT) on request
- PWM frequency: 800 Hz
- Setting range: 1:100
- Please note that the cable plug must be ordered separately, see "Cable plug Type 2518, form A according to DIN EN 175301 - 803" on page 13 or separate data sheet for **Type 2518** ▶.
- Refer to chapter "3. Approvals and conformities" on page 4 for more information about the approvals.

Circuit function	Port connection	Orifice [mm]	Approvals	K_{vs}-value water [m³/h]	Nominal pressure [bar]	Article no. Brass body	Article no. Stainless steel body
CF A 2/2-way solenoid proportional control valve Direct-acting Normally closed 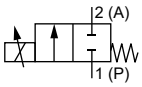 	G ⅛	0.8	–	0.018	16	239070	239072
	G ⅛		UR	0.018	16	275009	275016
	G ⅛		ATEX/IECEx	0.018	8	304465	o. r.
	G ⅛	1.2	–	0.040	12	239073	239074
	G ⅛		UR	0.040	12	275010	275018
	G ⅛		ATEX/IECEx	0.040	6	330865	o. r.
	G ⅛	1.5	–	0.060	10	239075	239076
	G ⅛		UR	0.060	10	275011	275019
	G ⅛		ATEX/IECEx	0.060	6	326019	o. r.
	G ⅛	2.0	–	0.100	8	239077	239078
	G ⅛		UR	0.100	8	275012	275020
	G ⅛		ATEX/IECEx	0.100	6	330866	o. r.
	G ¼	2.5	–	0.150	5	239079	239080
	G ¼		UR	0.150	5	275013	275022
	G ¼		ATEX/IECEx	0.150	3	330867	o. r.
	G ¼	3.0	–	0.220	3.5	239081	239082
	G ¼		UR	0.220	3.5	275014	275023
	G ¼		ATEX/IECEx	0.220	2	330868	o. r.
	G ¼	4.0	–	0.320	2	239083	239084
	G ¼		UR	0.320	2	275015	275024
	G ¼		ATEX/IECEx	0.320	1	330869	o. r.
	G ¼	5.0	–	0.430	0.8	280645	o. r.
	G ¼	6.0	–	0.580	0.5	254419	o. r.

o. r. = on request

Further variants on request			
	Material Seal material FFKM Seal material EPDM		**Analytical** Oxygen version, parts oil-, fat- and silicon free
	Approval Further information can be found in chapter "3. Approvals and conformities" on page 4.		**Coil** 12 V coil

DTS 1000173854 EN Version: T Status: RL (released | freigegeben | valide) printed: 22.01.2026

valvesgo.com

8.6. Ordering chart accessories

Cable plug Type 2518, form A according to DIN EN 175301 - 803

Note:
For further variants see data sheet **Type 2518** ▶.

Cable plug	Dimensions	Version	Voltage	Article no.
	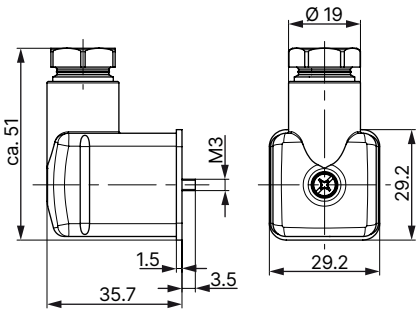	Without wiring (AC/DC)	0...250 V AC/DC	314802

Control electronics Type 8605 for proportional valves

Note:
Refer to data sheet **Type 8605** ▶ for more information about the control electronics.

Control electronics	Version	Max. coil current range [mA]	Voltage 24 V DC	Voltage 12 V DC	Article no.
	Cable plug with PG cable gland	200...1000	X	X	316530
	Cable plug with M12 connection	200...1000	X	X	316528
	Cable plug with PG cable gland	500...2000	–	X	316529
	Cable plug with M12 connection	500...2000	–	X	316526
	Cable plug with PG cable gland without operating unit	200...1000	X	X	316521
	Cable plug with M12 connection without operating unit	200...1000	X	X	316522
	Cable plug with PG cable gland without operating unit	500...2000	–	X	316523
	Cable plug with M12 connection without operating unit	500...2000	–	X	316525
	Standard rail	200...1000	X	X	316532
	Standard rail	500...2000	–	X	316533

X = available
– = not available

DTS 1000173854 EN Version: T Status: RL (released | freigegeben | valide) printed: 22.01.2026

valvesgo.com