bürkert
FLUID CONTROL SYSTEMS

# 2/2-way diaphragm valve with pneumatic plastic actuator

- Valve body and diaphragm are available in different materials and variants
- Media-wetted surfaces in Ra ≤ 0.38 µm...1.6 µm (optionally electropolished)
- Available in all common connection sizes and variants

Product variants described in the data sheet may differ from the product presentation and description.

## Can be combined with

**Type SV02**
Diaphragms

**Type 2034**
Multifunction block solutions

**Type 2933**
2/2-way diaphragm valve with manually operated actuator (basic)

**Type 2036**
Robolux multiway diaphragm valve, pneumatically operated

**Type 8690**
Pneumatic control unit for decentralised automation of process valves ELEMENT

**Type 8697**
Pneumatic control unit for decentralised automation of process valves ELEMENT

**Type 8098**
FLOWave SAW flowmeter

## Type description

The externally controlled diaphragm valve Type 2030/2031 consists of a pneumatically operated piston actuator, a diaphragm and a 2-way valve body. The proven and robust actuator with plastic valve body ensures reliable operation in hygienic or aggressive environments. The flow-optimised valve body with minimal dead space enables high volume flow rates and a wide range of possible applications. The valve body and the diaphragms are available in all common materials and versions. The actuator has a compact, autoclavable design (PPS variant). The integration of automation units 8690/8697 is possible at all levels of expansion (can be retrofitted). An explosion-proof ATEX/IECEx device variant is available.

The diaphragm bonnet is available in either plastic or stainless steel. The actuator is equipped with an integrated, optical position indicator as standard, optionally a min./max. stroke limiter can be installed.

DTS 1000450587 EN Version: S Status: RL (released | freigegeben | valide) printed: 24.06.2026


© Christian Bürkert GmbH & Co. KG, Subject to alteration



valvesgo.com

## Table of contents


**1. General technical data** 3

**2. Control functions** 5

**3. Approvals and conformities** 6

3.1. General notes 6
3.2. Conformity 6
3.3. Standards 6
3.4. Explosion protection 6
3.5. Foods and beverages/Hygiene 6
3.6. Others 7

**4. Materials** 7

4.1. Bürkert resistApp 7
4.2. Pressure temperature diagram for plastic valve body 7
4.3. Material specifications 8
4.4. Example of available diaphragm materials 9

**5. Dimensions** 10

5.1. Actuator 10
CLASSIC actuator 10
CLASSIC actuator with interface for block mounting (MT85) 11
CLASSIC actuator with control unit Type 8697 12
5.2. Forged steel valve body (VS) with welded connection 13
5.3. Forged steel valve body (VS) with clamp connection 15
5.4. Tube valve body (VP) with welded connection 17
5.5. Tube valve body (VP) with clamp connection 18
5.6. Tube valve body (VP) with threaded connection 19
5.7. Tube valve body (VP) with flange connection 20
5.8. Cast valve body (VG) with welded connection 21
5.9. Cast valve body (VG) with clamp connection 23
5.10. Plastic valve body (PV, PP, PD) with spigot connection 24
5.11. Plastic valve body (PW, PV, PP, PD) with true union 26
5.12. Plastic valve body (PV, PP, PD) with flange connection 29

**6. Performance specifications** 31

6.1. Flow rate characteristics 31
Forged steel valve body (VS), block body (VI) 31
Tube valve body (VP) 32
Cast valve body (VG) 32
Plastic valve body (PW, PV, PP, PD) 33
6.2. Medium pressure 34

**7. Product accessories** 35

**8. Networking and combination with other Bürkert products** 36

**9. Ordering information** 37

9.1. Bürkert eShop 37
9.2. Bürkert product filter 37
9.3. Bürkert Product Enquiry Form 37


DTS 1000450587 EN Version: S Status: RL (released | freigegeben | valide) printed: 24.06.2026

valvesgo.com



valvesgo.com

# 1. General technical data

| | |
|---|---|
| **Product properties** | |
| Dimensions | Further information can be found in chapter "5. Dimensions" on page 10. |
| **Material** [1.)] | |
| Forged steel valve body (VS) [1.)] | Forged stainless steel 1.4435 in accordance with BN2 DIN EN 1022 - 5, F316L in accordance with to ASTM, A182/A182M and 316L in accordance with to ASME BPE |
| Block body (VI) [1.)] | Stainless steel block material 1.4435 according to DIN EN 10088 and 316L according to ASME BPE (Table MM- 2.1.1, Ed. 2024)<br>BN2 available on request |
| Tube valve body (VP) [1.)] | Stainless steel tube 1.4435-BN2 / UNS S31603 (316L) according to DIN 11866, ASTM A269 / A270, DIN EN 10217 - 7 / 10216 - 5 |
| Cast valve body (VG) [1.)] | Stainless steel precision casting 1.4435 / 316L |
| Plastic valve body (PW, PV, PP, PD) [1.)] | PVC-C, PVC-U, PP, PVDF |
| Diaphragm | EPDM (AD) [1.)], PTFE/EPDM (EA) [1.)], Advanced PTFE/EPDM (EU) [1.)], laminate of GYLON® and EPDM (ER) [1.)] |
| Actuator | PPS, PA |
| Diaphragm size | 6...100, for tube valve body 8...80, for plastic body 15...100 |
| **Standard surface quality** | |
| Forged steel valve body (VS) [1.)] | Internally electrically polished: Ra ≤ 0.38 µm (NO17) [1.)] (ASME BPE SF4 / DIN HE4)<br>(externally forged surface, electrically polished)<br>Internally mechanically polished: Ra ≤ 0.5 µm (NO14) [1.)] (ASME BPE SF1)<br>(externally forged surface) |
| Block body (VI) [1.)] | Internally electrically polished: Ra ≤ 0.38 µm (NO17) [1.)] (ASME BPE SF4 / DIN HE4)<br>(externally Ra ≤ 1.6 µm)<br>Internally mechanically polished: Ra ≤ 0.5 µm (NO14) [1.)] (ASME BPE SF1)<br>(externally Ra ≤ 1.6 µm) |
| Tube valve body (VP) [1.)] | Internally electrically polished: Ra ≤ 0.38 µm (NO17) [1.)] (ASME BPE SF4 / DIN HE4)<br>(externally electrically polished)<br>Internally glass bead blasted: Ra ≤ 1.6 µm (NO05) [1.)]<br>(externally glass bead blasted (NO01) [1.)]) |
| Cast valve body (VG) [1.)] | Internally electrically polished: Ra ≤ 0.6 µm (NO16) [1.)] (ASME BPE SF6)<br>(externally cast surface, electrically polished)<br>Internally mechanically polished: Ra ≤ 0.76 µm (NO06) [1.)] (ASME BPE SF3 / DIN H2)<br>(externally cast surface) |
| **Performance data** | |
| Maximum pilot pressure (CF A) | 7 bar (for actuator size 40 [1.)]...125 [1.)]/PPS)<br>6 bar (for actuator size 175 [1.)] and 225 [1.)]/PA)<br>See "6.2. Medium pressure" on page 34 |
| Pilot air port | Thread G ¼, thread G ⅛ for actuator size 40 and 50 |
| **Medium data** | |
| Operating medium | Neutral gases and liquids, highly purified, sterile, aggressive or abrasive mediums<br>(see **resistance chart** ▶) |
| **Medium temperature** [6.)] | |
| Actuator made of PA | Max. 100 °C |
| EPDM (AD) [1.)] | - 10 °C...+ 143 °C (steam sterilisation + 150 °C for 60 min) |
| PTFE/EPDM (EA) [1.)] | - 10 °C...+ 130 °C (steam sterilisation + 140 °C for 60 min) |
| Advanced PTFE/EPDM (EU) [1.)] | - 5 °C...+ 143 °C (steam sterilisation + 150 °C for 60 min) |
| Laminate of GYLON® and EPDM (ER) [1.)] | - 5 °C...+ 130 °C (steam sterilisation + 140 °C for 60 min) |
| Plastic body | See "4.2. Pressure temperature diagram for plastic valve body" on page 7 |
| Control medium | Neutral gases, air |

DTS 1000450587 EN Version: S Status: RL (released | freigegeben | valide) printed: 24.06.2026



valvesgo.com

| Product connections | |
|---|---|
| **Port connection** [2.)] | |
| Nominal diameter | DN 06...DN 100 (⅛"...4") |
| **Stainless steel body** [3.)] | |
| Welded connection [2.)] | DIN EN ISO 1127 / ISO 4200 / DIN 11866 series B<br>DIN 11850 - 2 / DIN 11866 series A / DIN EN 10357 series A<br>ASME BPE / DIN 11866 series C |
| Clamp connection [2.)] | DIN 32676 series A (DIN pipe)<br>DIN 32676 series B (ISO pipe)<br>ASME BPE |
| **Plastic body** | |
| Spigot connection | DN 15...DN 50 |
| True union | DN 15...DN 50 |
| Loose flange | DN 15...DN 65 |
| Fixed flange | DN 80...DN 100 |
| **Environment and installation** | |
| Installation position | See **operating manual Type 2031** ▸ |
| **Ambient temperature** [4.)] | |
| PPS, actuator size ≤ 80 mm | + 5 °C...+ 140 °C [5.)] |
| PPS, actuator size 100 mm, 125 mm | + 5 °C...+ 90 °C (short-term up to + 140 °C) [5.)] |
| PA, actuator size ≤ 125 mm | - 10 °C...+ 60 °C [5.)] |
| PA, actuator size ≥ 175 mm | - 10 °C...+ 50 °C [5.)] |

1.) This information is part of the product key (see "9.3. Bürkert Product Enquiry Form" on page 37).
2.) Further variants are available on request.
3.) Tube valve body (VP) also available with flange and threaded connections
4.) With plastic housings, a temperature limitation due to housing material is possible.
5.) For standard variant
6.) The component (actuator, diaphragm or housing) with the lowest maximum permissible temperature defines the maximum permissible temperature for the medium and environment.

DTS 1000450587 EN Version: S Status: RL (released | freigegeben | valide) printed: 24.06.2026

valvesgo.com



valvesgo.com

## 2. Control functions

| Symbol | Description |
|---|---|
| 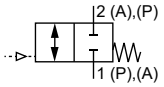 | **Control function A (CF A)**<br>Pneumatically operated 2/2-way on/off valve<br>Bidirectional<br>Normally closed by spring force |
| 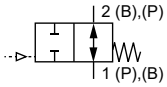 | **Control function B (CF B)**<br>Pneumatically operated 2/2-way on/off valve<br>Bidirectional<br>Normally opened by spring force |
| 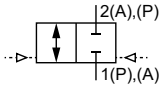 | **Control function I (CF I)**<br>Pneumatically operated 2/2-way on/off valve on either side<br>Bidirectional<br>Switching position dependent on external control |

DTS 1000450587 EN Version: S Status: RL (released | freigegeben | valide) printed: 24.06.2026

valvesgo.com



valvesgo.com

# 3. Approvals and conformities

## 3.1. General notes

- The approvals and conformities listed below must be stated when making enquiries. This is the only way to ensure that the product complies with all required specifications.
- Not all available variants can be supplied with the below mentioned approvals or conformities.

## 3.2. Conformity

In accordance with the Declaration of Conformity, the product is compliant with the EU Directives.

## 3.3. Standards

The applied standards which are used to demonstrate compliance with the EU Directives are listed in the EU-Type Examination Certificate and/or the EU Declaration of Conformity.

## 3.4. Explosion protection

| Approval | Description |
|---|---|
| | **Optional: Explosion protection (valid for the variable code PX51)**<br>As a category 2 device suitable for zone 1/21 and zone 2/22.<br><br>**ATEX:**<br>EPS 18 ATEX 2 008 X<br>II 2G Ex h IIC T4...T2 Gb<br>II 2D Ex h IIIC T135 °C...T300 °C Db<br><br>**IECEx:**<br>IECEx EPS 18.0007X<br>Ex h IIC T4...T2 Gb<br>Ex h IIIC T135 °C...T300 °C Db |

| Temperature class | T2 | T3 | T4 |
|---|---|---|---|
| Maximum surface temperature | + 300 °C | + 200 °C | + 135 °C |
| Ambient temperature | - 40...+ 130 °C | - 40...+ 130 °C | - 40...+ 100 °C |
| Maximum medium temperature | + 285 °C | + 185 °C | + 125 °C |

**Note:** The ambient and medium temperature range may be limited by non-ex-relevant specifications. Observe the Operating Instructions.

## 3.5. Foods and beverages/Hygiene

| Conformity | Description |
|---|---|
| | **3-A Sanitary Standards Inc. (valid for the variable code PE05)**<br>The products comply with 3-A Sanitary Standards Inc (3-A SSI) as per certificate. |
| **FDA** | **FDA – Code of Federal Regulations**<br>The diaphragms made of EPDM (AD), PTFE/EPDM (EA), Advanced PTFE/EPDM (EU) and laminate of GYLON® and EPDM (ER) comply with the Code of Federal Regulations published by the FDA (Food and Drug Administration, USA). |
| **USP** | **United States Pharmacopeial Convention (USP)**<br>The diaphragms made of EPDM (AD), PTFE/EPDM (EA), Advanced PTFE/EPDM (EU) and laminate of GYLON® and EPDM (ER) are tested according to USP Class VI. |
| | **EC Regulation 1935/2004 of the European Parliament and of the Council**<br>The diaphragms made of EPDM (AD), PTFE/EPDM (EA), Advanced PTFE/EPDM (EU) and laminate of GYLON® and EPDM (ER) are suitable for use with food and beverages (according to EC Regulation 1935/2004/EC). |

DTS 1000450587 EN Version: S Status: RL (released | freigegeben | valide) printed: 24.06.2026



valvesgo.com

### 3.6. Others

| Conformity | Description |
|---|---|
| TA Luft | Technical instruction on air quality control (valid for the variable code PM01) |

## 4. Materials

### 4.1. Bürkert resistApp

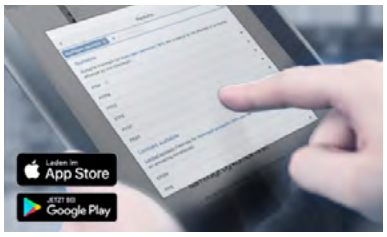


**Bürkert resistApp – Chemical resistance chart**

You want to ensure the reliability and durability of the materials in your individual application case? Verify your combination of media and materials on our website or in our resistApp.

Start chemical resistance check

### 4.2. Pressure temperature diagram for plastic valve body

**Note:**
This information is important for material selection. Observe the permissible operating pressure depending on the medium temperature.

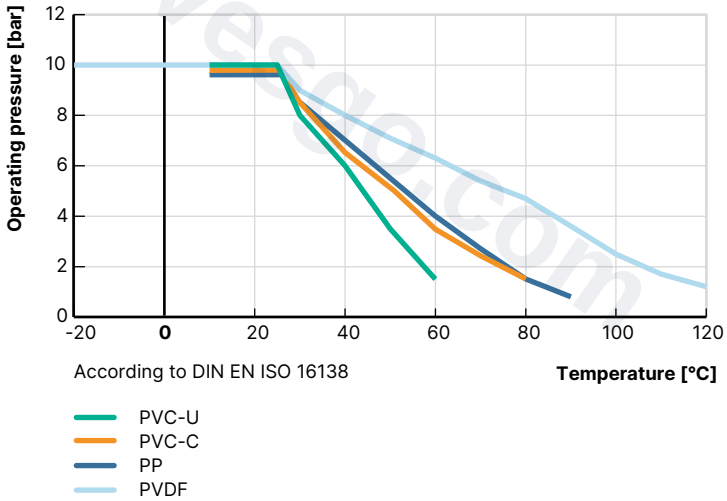


DTS 1000450587 EN Version: S Status: RL (released | freigegeben | valide) printed: 24.06.2026


valvesgo.com

## 4.3. Material specifications

**Actuator size 40...125**

**Note:**
The exemplary representation may differ from the actual product.

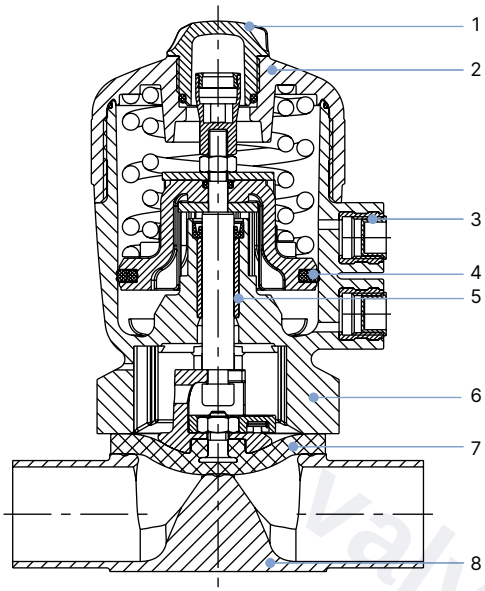


| No. | Element | Material |
|---|---|---|
| 1 | Transparent cap | Polysulfone PSU |
| 2 | Cover | Polyphenylene sulphide PPS (standard)<br>Polyamide PA (on request) |
| 3 | Pilot air ports | Stainless steel 1.4305 |
| 4 | Piston seal | FKM |
| 5 | Socket | Sinter metal |
| 6 | Interface | Polyphenylene sulphide PPS (Standard)<br>Polyamide PA (on request)<br>Stainless steel 1.4404 (on request) |
| 7 | Diaphragm | EPDM (AD), PTFE/EPDM (EA),<br>Advanced PTFE/EPDM (EU),<br>laminate of GYLON® and EPDM (ER) |
| 8 | Valve body | See "1. General technical data" on page 3 |

**Actuator size 175 and 225**

**Note:**
The exemplary representation may differ from the actual product.

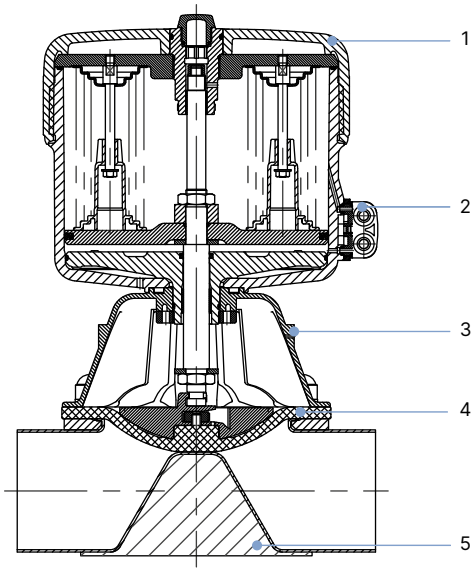


| No. | Element | Material |
|---|---|---|
| 1 | Cover | Polyamide PA |
| 2 | Pilot air ports | Stainless steel 1.4305 |
| 3 | Diaphragm bonnet | Stainless steel 1.4308 |
| 4 | Diaphragm | EPDM (AD), PTFE/EPDM (EA),<br>Advanced PTFE/EPDM (EU),<br>laminate of GYLON® and EPDM (ER) |
| 5 | Valve body | See "1. General technical data" on page 3 |

DTS 1000450587 EN Version: S Status: RL (released | freigegeben | valide) printed: 24.06.2026

valvesgo.com


valvesgo.com

## 4.4. Example of available diaphragm materials

The diaphragms have been developed to meet the unique challenges of hygienic and sterile requirements. Bürkert offers diaphragms with precise material composition and high accuracy. Bürkert diaphragms are available in a wide range of materials which have been tested and proven in applications in the food and beverage, biotechnology, pharmaceutical and cosmetics industries. The diaphragms are tested during development and production to ensure reliability under difficult process conditions.

- EPDM (AD)
- PTFE/EPDM (EA)
- Advanced PTFE/EPDM (EU)
- Laminate of GYLON® and EPDM (ER)

Further information can be found in our flyer “Diaphragm competence for hygienic applications” on our **website** ▶.

DTS 1000450587 EN Version: S Status: RL (released | freigegeben | valide) printed: 24.06.2026

valvesgo.com



valvesgo.com

# 5. Dimensions

## 5.1. Actuator

**CLASSIC actuator**

**Note:**
Dimensions in mm, unless otherwise stated

**Diaphragm size 6**

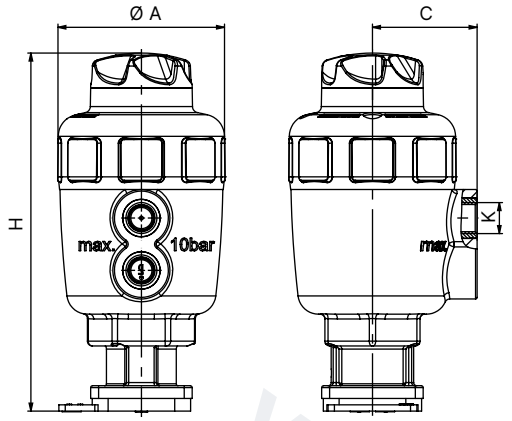


**Diaphragm size 8...50**

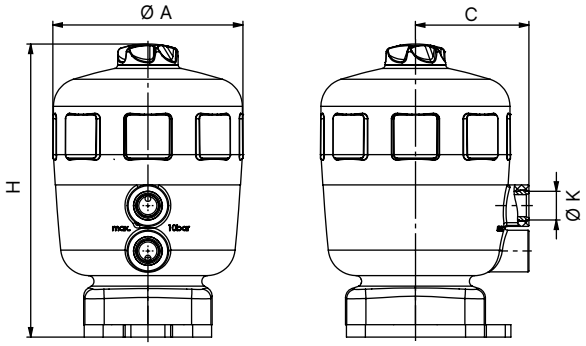


**Diaphragm size 65...100**

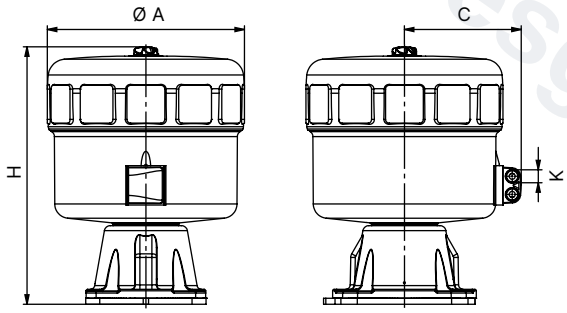


| Diaphragm size | Actuator size Ø | Ø A | C | K | H |
|---|---|---|---|---|---|
| 6 | 40 (C) | 53 | 34 | G ⅛" | 113 |
| 8 | 40 (C) | 53 | 34 | G ⅛" | 89 |
| 15 | 50 (D) | 64 | 39 | G ⅛" | 108 |
| | 63 (E) | 80 | 52 | G ¼" | 125 |
| 20 | 63 (E) | 80 | 52 | G ¼" | 131 |
| | 80 (F) | 101 | 60 | G ¼" | 152 |
| 25 | 63 (E) | 80 | 52 | G ¼" | 136 |
| | 80 (F) | 101 | 60 | G ¼" | 156 |
| 40 | 100 (G) | 127 | 73 | G ¼" | 205 |
| | 125 (H) | 158 | 86 | G ¼" | 243 |
| 50 | 100 (G) | 127 | 73 | G ¼" | 207 |
| | 125 (H) | 158 | 86 | G ¼" | 242 |
| 65 | 175 (K) | 211 | 130 | G ¼" | 350 |
| 80 | 175 (K) | 211 | 130 | G ¼" | 350 |
| | 225 (L) | 261 | 155 | G ¼" | 345 |
| 100 | 225 (L) | 261 | 155 | G ¼" | 345 |

DTS 1000450587 EN Version: S Status: RL (released | freigegeben | valide) printed: 24.06.2026

valvesgo.com


valvesgo.com

### CLASSIC actuator with interface for block mounting (MT85)

**Note:**
Dimensions in mm, unless otherwise stated

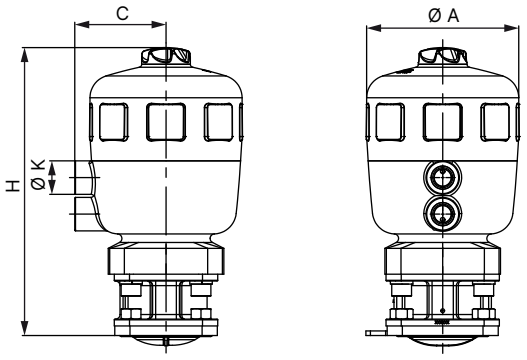


| Diaphragm size | Actuator size Ø | H | Ø A | C | K |
|---|---|---|---|---|---|
| 6 [1.)] | 40 (C) | 113 | 53 | 34 | G ⅛" |
| 8 | 40 (C) | 111 | 53 | 34 | G ⅛" |
| 15 | 50 (D) | 137 | 64 | 39 | G ⅛" |
| | 63 (E) | 154 | 80 | 52 | G ¼" |
| 20 | 63 (E) | 165 | 80 | 52 | G ¼" |
| | 80 (F) | 186 | 101 | 52 | G ¼" |
| 25 | 63 (E) | 170 | 80 | 52 | G ¼" |
| | 80 (F) | 190 | 101 | 60 | G ¼" |
| 40 | 100 (G) | 246 | 127 | 73 | G ¼" |
| | 125 (H) | 284 | 158 | 86 | G ¼" |
| 50 | 100 (G) | 254 | 127 | 73 | G ¼" |
| | 125 (H) | 288 | 158 | 86 | G ¼" |

1.) Always with a metal interface similar to the MT85 interface (see "CLASSIC actuator" on page 10)

DTS 1000450587 EN Version: S Status: RL (released | freigegeben | valide) printed: 24.06.2026


valvesgo.com

### CLASSIC actuator with control unit Type 8697

**Note:**
Dimensions in mm, unless otherwise stated

| CLASSIC actuator with control unit | CLASSIC actuator with control unit (MT85) |
|---|---|
| Diaphragm size 6...50 | Diaphragm size 6...50 |
| 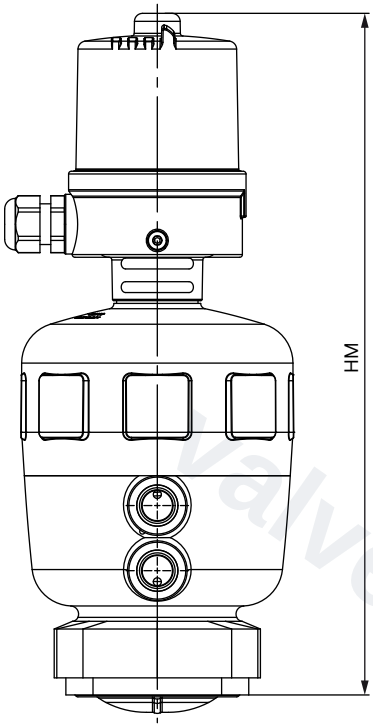  | 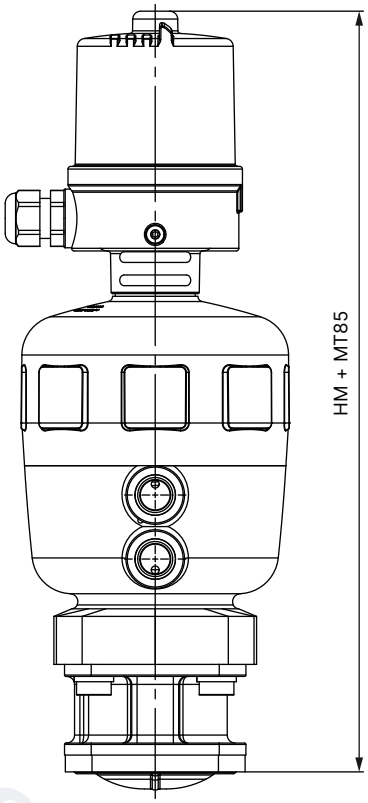  |

| Diaphragm size | Actuator size Ø | HM | HM + MT85 |
|---|---|---|---|
| 6 [1.)] | 40 (C) | 209 | 209 |
| 8 | 40 (C) | 185 | 207 |
| 15 | 50 (D) | 204 | 233 |
| | 63 (E) | 220 | 249 |
| 20 | 63 (E) | 227 | 261 |
| | 80 (F) | 247 | 281 |
| 25 | 63 (E) | 232 | 266 |
| | 80 (F) | 252 | 286 |
| 40 | 100 (G) | 298 | 339 |
| | 125 (H) | 336 | 377 |
| 50 | 100 (G) | 301 | 347 |
| | 125 (H) | 335 | 381 |
| 65 | 175 (K) | – | 437 |
| 80 | 175 (K) | – | 446 |
| | 225 (L) | – | 440 |
| 100 | 225 (L) | – | 440 |

1.) Always with a metal interface similar to the MT85 interface (see "CLASSIC actuator" on page 10)

DTS 1000450587 EN Version: S Status: RL (released | freigegeben | valide) printed: 24.06.2026



valvesgo.com

## 5.2. Forged steel valve body (VS) with welded connection

**Note:**

- Dimensions in mm, unless otherwise stated
- Further information on the draining angle can be found in the "Additional manual Type 2xxx 3xxx" on our website (see **operating instructions Type 2031** ▶).

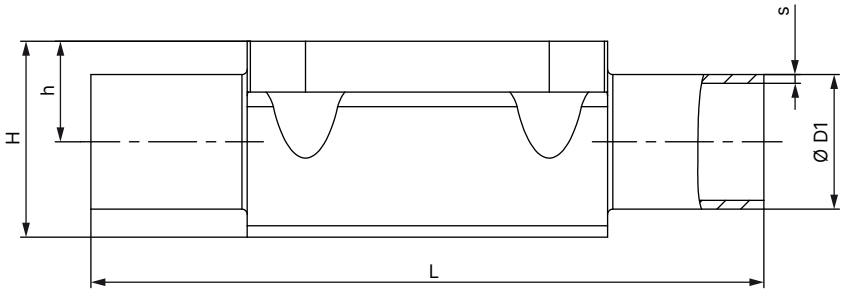


| Diaphragm size | Port connection DN | Ø D1 | s | L | h | H | Product key [1.)] |
|---|---|---|---|---|---|---|---|
| **DIN EN ISO 1127 / ISO 4200 / DIN 11866 series B** | | | | | | | |
| 6 [2.)] | 8 | 13.5 | 1.6 | 72 | 8.5 | 18.0 | SA40 |
| 8 | 8 | 13.5 | 1.6 | 90 | 9.3 | 18.8 | SA40 |
| 15 | 8 | 13.5 | 1.6 | 108 | 8.15 | 19.85 | SA40 |
| 8 | 10 | 17.2 | 1.6 | 90 | 9.3 | 18.8 | SA41 |
| 15 | 10 | 17.2 | 1.6 | 110 | 12.05 | 23.75 | SA41 |
| 15 | 15 | 21.3 | 1.6 | 110 | 12.05 | 23.75 | SA42 |
| 20 | 15 | 21.3 | 1.6 | 119 | 16 | 30.3 | SA42 |
| 20 | 20 | 26.9 | 1.6 | 119 | 16 | 30.3 | SA43 |
| 25 | 20 | 26.9 | 1.6 | 119 | 19 | 37.0 | SA43 |
| 25 | 25 | 33.7 | 2.0 | 129 | 19 | 37.0 | SA44 |
| 40 | 25 | 33.7 | 2.0 | 161 | 27.6 | 52.4 | SA44 |
| 40 | 32 | 42.4 | 2.0 | 161 | 27.6 | 52.4 | SA45 |
| 40 | 40 | 48.3 | 2.0 | 161 | 27.6 | 52.4 | SA46 |
| 50 | 50 | 60.3 | 2.0 | 192 | 35.5 | 68.3 | SA47 |
| 80 | 65 | 76.1 | 2.0 | 250 | 51 | 98.1 | SA48 |
| 80 | 80 | 88.9 | 2.3 | 250 | 51 | 98.1 | SA49 |
| 100 [2.)] | 100 | 114.3 | 2.3 | 295 | 63.5 | 127.0 | SA39 |
| **DIN 11850 - 2 / DIN 11866 series A / DIN EN 10357 series A** | | | | | | | |
| 6 [2.)] | 10 | 13 | 1.5 | 72 | 8.5 | 18.0 | SD40 |
| 8 | 10 | 13 | 1.5 | 90 | 9.3 | 18.8 | SD40 |
| 15 | 10 | 13 | 1.5 | 110 | 8.15 | 19.85 | SD40 |
| 15 | 15 | 19 | 1.5 | 110 | 12.05 | 23.75 | SD42 |
| 20 | 20 | 23 | 1.5 | 119 | 16.0 | 30.3 | SD43 |
| 25 | 25 | 29 | 1.5 | 129 | 19.0 | 37.0 | SD44 |
| 40 | 32 | 35 | 1.5 | 161 | 27.6 | 52.4 | SD45 |
| 40 | 40 | 41 | 1.5 | 161 | 27.6 | 52.4 | SD46 |
| 50 | 50 | 53 | 1.5 | 192 | 35.5 | 68.3 | SD47 |
| 80 | 65 | 70 | 2.0 | 250 | 51.0 | 98.1 | SD48 |
| 80 | 80 | 85 | 2.0 | 250 | 51.0 | 98.1 | SD49 |
| 100 [2.)] | 100 | 104 | 2.0 | 295 | 63.5 | 127.0 | SD50 |

DTS 1000450587 EN Version: S Status: RL (released | freigegeben | valide) printed: 24.06.2026


valvesgo.com

| Diaphragm size | Port connection DN | ØD1 | s | L | h | H | Product key [1.)] |
|---|---|---|---|---|---|---|---|
| **ASME BPE / DIN 11866 series C** | | | | | | | |
| 6 [2.)] | ¼" | 6.35 | 0.89 | 72 | 8.5 | 18.0 | SA90 |
| 6 [2.)] | ⅜" | 9.53 | 0.89 | 72 | 8.5 | 18.0 | SA91 |
| 6 [2.)] | ½" | 12.7 | 1.65 | 72 | 8.5 | 18.0 | SA92 |
| 8 | ¼" | 6.35 | 0.89 | 78 | 5.7 | 15.2 | SA90 |
| 8 | ⅜" | 9.53 | 0.89 | 89 | 5.7 | 15.2 | SA91 |
| 8 | ½" | 12.7 | 1.65 | 89 | 9.3 | 18.8 | SA92 |
| 15 | ½" | 12.7 | 1.65 | 108 | 8.15 | 19.85 | SA92 |
| 15 | ¾" | 19.05 | 1.65 | 108 | 12.05 | 23.75 | SA93 |
| 20 | ¾" | 19.05 | 1.65 | 117 | 16.0 | 30.3 | SA93 |
| 25 | 1" | 25.4 | 1.65 | 127 | 19.0 | 37.0 | SODF |
| 40 | 1½" | 38.1 | 1.65 | 159 | 27.6 | 52.4 | SODH |
| 50 | 2" | 50.8 | 1.65 | 190 | 35.5 | 68.3 | SODI |
| 50 | 2½" | 63.5 | 1.65 | 192 | 35.5 | 68.6 | SODJ |
| 80 | 2½" | 63.5 | 1.65 | 250 | 51.0 | 98.1 | SODJ |
| 80 | 3" | 76.2 | 1.65 | 250 | 51.0 | 98.1 | SODK |
| 100 [2.)] | 4" | 101.6 | 2.11 | 295 | 63.5 | 127.0 | SODL |
| **BS 4825** | | | | | | | |
| 8 | 8 | 6.35 | 1.20 | 78 | 5.7 | 15.2 | SODB |
| 8 | 10 | 9.53 | 1.20 | 89 | 5.7 | 15.2 | SODC |
| 15 | 15 | 12.7 | 1.20 | 108 | 8.15 | 19.85 | SODD |
| 20 | 20 | 19.05 | 1.20 | 117 | 16.0 | 30.3 | SODE |
| 25 | 25 | 25.4 | 1.65 | 127 | 19.0 | 37.0 | SODF |
| 40 | 40 | 38.1 | 1.65 | 159 | 27.6 | 52.4 | SODH |
| 50 | 50 | 50.8 | 1.65 | 190 | 35.5 | 68.3 | SODI |
| 50 | 65 | 63.5 | 1.65 | 192 | 35.5 | 68.6 | SODJ |
| 80 | 80 | 63.5 | 1.65 | 250 | 51.0 | 98.1 | SODJ |
| 80 | 80 | 76.2 | 1.65 | 250 | 51.0 | 98.1 | SODK |
| **SMS 3008** | | | | | | | |
| 25 | 25 | 25 | 1.2 | 129 | 19 | 37.0 | SA60 |
| 40 | 40 | 38 | 1.2 | 161 | 27.6 | 52.4 | SA62 |
| 50 | 50 | 51 | 1.2 | 192 | 35.5 | 68.3 | SA63 |
| 100 [2.)] | 100 | 101.6 | 2 | 295 | 63.5 | 127.0 | SA66 |
| **DIN 11850 series 0** | | | | | | | |
| 8 | 6 | 8 | 1.0 | 90 | 5.7 | 15.2 | SC41 |
| 8 | 8 | 10 | 1.0 | 90 | 5.7 | 15.2 | SC42 |

1.) This information is part of the product key (see "9.3. Bürkert Product Enquiry Form" on page 37).
2.) Only available as block material

DTS 1000450587 EN Version: S Status: RL (released | freigegeben | valide) printed: 24.06.2026

valvesgo.com



valvesgo.com

## 5.3. Forged steel valve body (VS) with clamp connection

**Note:**

- Dimensions in mm, unless otherwise stated
- Further information on the draining angle can be found in the "Additional manual Type 2xxx 3xxx" on our website (see **operating instructions Type 2031** ▶).

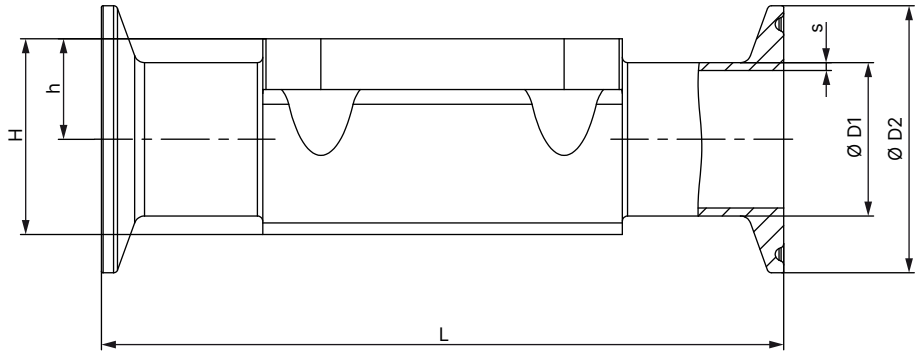


| Diaphragm size | Port connection DN | Ø D1 | s | Ø D2 | L | h | H | Product key [1.)] | Variable code [1.)] |
|---|---|---|---|---|---|---|---|---|---|
| **DIN 32676 series B (ISO pipe)** | | | | | | | | | |
| 6 [2.)] | 15 | 13.5 | 1.6 | 25.0 | 63.5 | 8.5 | 18.0 | TC40 | – |
| 15 | 15 | 21.3 | 1.6 | 50.5 | 167 | 12.05 | 23.75 | TC52 | – |
| 20 | 20 | 26.9 | 1.6 | 50.5 | 114 | 16.0 | 30.3 | TC43 | – |
| 25 | 25 | 33.7 | 2 | 50.5 | 129 | 19.0 | 37.0 | TC44 | – |
| 40 | 40 | 48.3 | 2 | 64.0 | 161 | 27.6 | 52.4 | TC46 | – |
| 50 | 50 | 60.3 | 2 | 77.5 | 190 | 35.5 | 68.3 | TC47 | – |
| 65 | 65 | 76.1 | 2 | 91.0 | 190 | 35.5 | 63.3 | TC48 | – |
| 80 | 80 | 88.9 | 2.3 | 106.0 | 222 | 51.0 | 98.1 | TC49 | – |
| 100 [2.)] | 100 | 114.3 | 2.3 | 130.0 | 350 | 63.5 | 127.0 | TC50 | – |
| **DIN 32676 series A (DIN pipe)** | | | | | | | | | |
| 6 [2.)] | 15 | 10 | 1 | 25.0 | 63.5 | 8.5 | 18.0 | TD40 | – |
| 8 | 10 | 13 | 1.5 | 34.0 | 126 | 9.3 | 18.8 | TD41 | – |
| 15 | 10 | 13 | 1.5 | 34.0 | 110 | 8.15 | 19.85 | TD41 | – |
| 15 | 15 | 19 | 1.5 | 34.0 | 110 | 12.05 | 23.75 | TD42 | – |
| 20 | 20 | 23 | 1.5 | 34.0 | 119 | 16.0 | 30.3 | TD43 | – |
| 25 | 25 | 29 | 1.5 | 50.5 | 129 | 19.0 | 37.0 | TD44 | – |
| 40 | 40 | 41 | 1.5 | 50.5 | 161 | 27.6 | 52.4 | TD46 | – |
| 50 | 50 | 53 | 1.5 | 64.0 | 192 | 35.5 | 68.3 | TD47 | – |
| 65 | 65 | 70 | 2 | 91.0 | 248 | 43.0 | 83.5 | TC48 | – |
| 80 | 80 | 70 | 2 | 91.0 | 222 | 51.0 | 98.1 | TC49 | – |

DTS 1000450587 EN Version: S Status: RL (released | freigegeben | valide) printed: 24.06.2026



valvesgo.com

| Diaphragm size | Port connection DN | Ø D1 | s | Ø D2 | L | h | H | Product key [1.)] | Variable code [1.)] |
|---|---|---|---|---|---|---|---|---|---|
| **ASME BPE** | | | | | | | | | |
| 6 [2.)] | ¼" | 6.35 | 0.89 | 25.0 | 63.5 | 8.5 | 18.0 | TG50 | – |
| 6 [2.)] | ⅜" | 9.53 | 0.89 | 25.0 | 63.5 | 8.5 | 18.0 | TG01 | – |
| 6 [2.)] | ½" | 12.7 | 1.65 | 25.0 | 63.5 | 8.5 | 18.0 | TG02 | – |
| 8 | ¼" | 6.35 | 0.89 | 25.0 | 64.5 | 5.7 | 15.2 | TG50 | – |
| 8 | ⅜" | 9.53 | 0.89 | 25.0 | 89 | 5.7 | 15.2 | TG01 | AF34 |
| 8 | ½" | 12.7 | 1.65 | 25.0 | 64 | 9.3 | 18.8 | TG02 | – |
| 8 | ½" | 12.7 | 1.65 | 25.0 | 89 | 9.3 | 18.8 | TG02 | AF34 |
| 15 | ½" | 12.7 | 1.65 | 25.0 | 89 | 8.15 | 19.85 | TG02 | – |
| 15 | ½" | 12.7 | 1.65 | 25.0 | 108 | 8.15 | 19.85 | TG02 | AF34 |
| 15 | ¾" | 19.05 | 1.65 | 25.0 | 89 | 12.05 | 23.75 | TG03 | – |
| 20 | ¾" | 19.05 | 1.65 | 25.0 | 102 | 16 | 30.3 | TG03 | – |
| 20 | ¾" | 19.05 | 1.65 | 25.0 | 117 | 16 | 30.3 | TG03 | AF34 |
| 25 | 1" | 25.4 | 1.65 | 50.5 | 114 | 19 | 37.0 | TG04 | – |
| 25 | 1" | 25.4 | 1.65 | 50.5 | 127 | 19 | 37.0 | TG04 | AF34 |
| 40 | 1½" | 38.1 | 1.65 | 50.5 | 140 | 27.6 | 52.4 | TG05 | – |
| 40 | 1½" | 38.1 | 1.65 | 50.5 | 159 | 27.6 | 52.4 | TG05 | AF34 |
| 50 | 2" | 50.8 | 1.65 | 64.0 | 159 | 35.5 | 68.3 | TG06 | – |
| 50 | 2" | 50.8 | 1.65 | 64.0 | 190 | 35.5 | 68.3 | TG06 | AF34 |
| 65 | 2½" | 63.5 | 1.65 | 77.5 | 249 | 43 | 83.5 | TG07 | – |
| 80 | 2½" | 63.5 | 1.65 | 77.5 | 216 | 51 | 98.1 | TG07 | – |
| 80 | 3" | 76.2 | 1.65 | 91.0 | 222 | 51 | 98.1 | TG08 | – |
| 100 [2.)] | 4" | 101.6 | 2.11 | 119.0 | 306 | 63.5 | 127.0 | TG09 | – |

1.) This information is part of the product key (see "9.3. Bürkert Product Enquiry Form" on page 37).
2.) Only available as block material

DTS 1000450587 EN Version: S Status: RL (released | freigegeben | valide) printed: 24.06.2026

valvesgo.com



valvesgo.com

## 5.4. Tube valve body (VP) with welded connection

**Note:**

- Dimensions in mm, unless otherwise stated
- Further information on the draining angle can be found in the "Additional manual Type 2xxx 3xxx" on our website (see **operating instructions Type 2031** ▶).

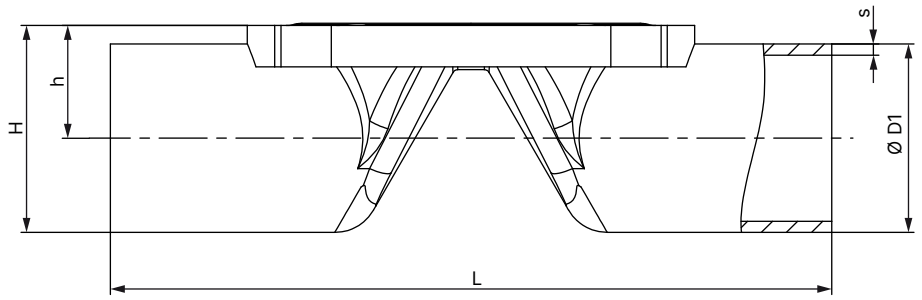


| Diaphragm size | Port connection DN | Ø D1 | s | L | h | H | Product key [1.)] |
|---|---|---|---|---|---|---|---|
| **DIN EN ISO 1127 / ISO 4200 / DIN 11866 series B** | | | | | | | |
| 8 | 8 | 13.5 | 1.6 | 90 | 9.85 | 16.60 | SA40 |
| 8 | 10 | 17.2 | 1.6 | 90 | 11.70 | 20.30 | SA41 |
| 15 | 15 | 21.3 | 1.6 | 110 | 14.35 | 25.00 | SA42 |
| 20 | 20 | 26.9 | 1.6 | 119 | 17.15 | 30.45 | SA43 |
| 25 | 25 | 33.7 | 2.0 | 129 | 20.55 | 37.40 | SA44 |
| 32 | 32 | 42.4 | 2.0 | 148 | 25.10 | 46.30 | SA45 |
| 40 | 40 | 48.3 | 2.0 | 161 | 29.35 | 53.50 | SA46 |
| 50 | 50 | 60.3 | 2.0 | 192 | 35.35 | 65.50 | SA47 |
| **DIN 11850 - 2 / DIN 11866 series A / DIN EN 10357 series A** | | | | | | | |
| 8 | 10 | 13 | 1.5 | 90 | 9.85 | 16.35 | SD40 |
| 15 | 15 | 19 | 1.5 | 110 | 13.20 | 22.70 | SD42 |
| 15 | 20 | 23 | 1.5 | 119 | 15.20 | 26.70 | SD43 |
| 20 | 25 | 29 | 1.5 | 129 | 18.20 | 32.70 | SD44 |
| 25 | 32 | 35 | 1.5 | 148 | 21.20 | 38.70 | SD45 |
| 32 | 40 | 41 | 1.5 | 161 | 24.40 | 44.90 | SD46 |
| 40 | 50 | 53 | 1.5 | 192 | 31.70 | 58.20 | SD47 |
| **ASME BPE / DIN 11866 series C** | | | | | | | |
| 8 | ½" | 12.7 | 1.65 | 90 | 9.45 | 21.95 | SA92 |
| 15 | ¾" | 19.05 | 1.65 | 117 | 13.23 | 25.73 | SA93 |
| 20 | 1" | 25.4 | 1.65 | 127 | 16.40 | 41.65 | SODF |
| 32 | 1½" | 38.1 | 1.65 | 159 | 22.95 | 48.20 | SODH |
| 40 | 2" | 50.8 | 1.65 | 190 | 30.60 | 62.60 | SODI |
| 50 | 2½" | 63.5 | 1.65 | 192 | 37.35 | 69.10 | SODJ |
| 65 | 3" | 76.2 | 1.65 | 250 | 46.30 | 84.40 | SODK |
| 80 | 4" | 101.6 | 2.11 | 295 | 60.0 | 110.80 | SODL |

1.) This information is part of the product key (see "9.3. Bürkert Product Enquiry Form" on page 37).

DTS 1000450587 EN Version: S Status: RL (released | freigegeben | valide) printed: 24.06.2026



valvesgo.com

## 5.5. Tube valve body (VP) with clamp connection

**Note:**

- Dimensions in mm, unless otherwise stated
- Further information on the draining angle can be found in the "Additional manual Type 2xxx 3xxx" on our website (see **operating instructions Type 2031** ▶).

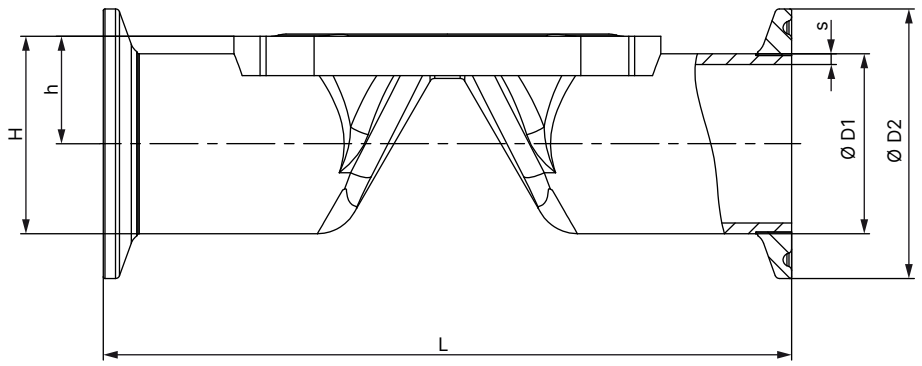


| Diaphragm size | Port connection DN | Ø D1 | s | Ø D2 | L | h | H | Product key [1.)] |
|---|---|---|---|---|---|---|---|---|
| **DIN 32676 series B (ISO pipe)** | | | | | | | | |
| 8 | 8 | 13.5 | 1.6 | 25.0 | 89 | 9.85 | 22.35 | TC40 |
| 8 | 10 | 17.2 | 1.6 | 25.0 | 89 | 11.70 | 24.20 | TC53 |
| 15 | 15 | 21.3 | 1.6 | 50.5 | 110 | 14.35 | 39.60 | TC52 |
| 20 | 20 | 26.9 | 1.6 | 50.5 | 119 | 17.15 | 42.40 | TC43 |
| 25 | 25 | 33.7 | 2.0 | 50.5 | 129 | 20.55 | 45.80 | TC44 |
| 32 | 32 | 42.4 | 2.0 | 64.0 | 148 | 25.10 | 57.10 | TC55 |
| 40 | 40 | 48.3 | 2.0 | 64.0 | 161 | 29.35 | 61.35 | TC46 |
| 50 | 50 | 60.3 | 2.0 | 77.5 | 192 | 35.35 | 74.10 | TC47 |
| **DIN 32676 series A (DIN pipe)** | | | | | | | | |
| 8 | 10 | 13.0 | 1.5 | 34.0 | 89 | 9.85 | 26.85 | TD41 |
| 15 | 15 | 19.0 | 1.5 | 34.0 | 110 | 13.20 | 30.20 | TD42 |
| 15 | 20 | 23.0 | 1.5 | 34.0 | 119 | 15.20 | 32.20 | TD43 |
| 20 | 25 | 29.0 | 1.5 | 50.5 | 129 | 18.20 | 43.45 | TD44 |
| 25 | 32 | 35.0 | 1.5 | 50.5 | 148 | 21.20 | 46.45 | TD45 |
| 32 | 40 | 41.0 | 1.5 | 50.5 | 161 | 24.40 | 49.65 | TD46 |
| 40 | 50 | 53.0 | 1.5 | 64.0 | 192 | 31.70 | 63.70 | TD47 |
| **ASME BPE** | | | | | | | | |
| 8 | ½" | 12.7 | 1.65 | 25.0 | 89 | 9.45 | 21.95 | TG02 |
| 15 | ¾" | 19.05 | 1.65 | 25.0 | 102 | 13.20 | 25.73 | TG03 |
| 20 | 1" | 25.4 | 1.65 | 50.5 | 114 | 16.40 | 41.65 | TG04 |
| 32 | 1½" | 38.10 | 1.65 | 50.5 | 140 | 22.95 | 48.20 | TG05 |
| 40 | 2" | 50.80 | 1.65 | 64.0 | 159 | 30.60 | 62.60 | TG06 |
| 50 | 2½" | 63.5 | 1.65 | 77.5 | 190 | 37.35 | 69.10 | TG07 |

1.) This information is part of the product key (see "9.3. Bürkert Product Enquiry Form" on page 37).

DTS 1000450587 EN Version: S Status: RL (released | freigegeben | valide) printed: 24.06.2026



valvesgo.com

## 5.6. Tube valve body (VP) with threaded connection

**Note:**

- Dimensions in mm, unless otherwise stated
- Further information on the draining angle can be found in the "Additional manual Type 2xxx 3xxx" on our website (see **operating instructions Type 2031** ▶).

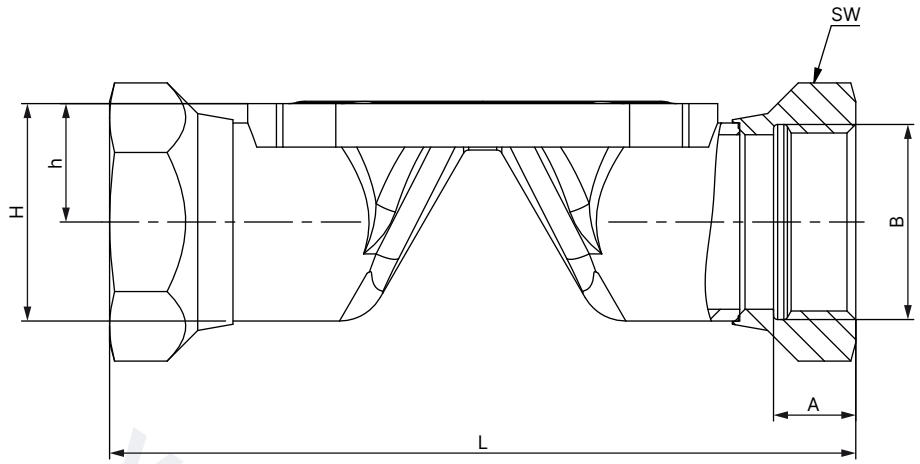


| Diaphragm size | L | A | B | h | H | Spanner width of threaded ports | Product key [1.)] |
|---|---|---|---|---|---|---|---|
| 8 | 85 | 9 | G ¼ | 11.70 | 20.3 | 17 | GM82 |
| 15 | 102 | 14 | G ½ | 14.35 | 25.0 | 27 | GM84 |
| 20 | 118 | 12 | G ¾ | 17.15 | 30.45 | 32 | GM85 |
| 25 | 127 | 14 | G 1 | 20.55 | 37.4 | 41 | GM86 |
| 32 | 146 | 16 | G 1¼ | 25.10 | 46.3 | 50 | GM87 |
| 40 | 159 | 18 | G 1½ | 29.35 | 53.5 | 60 | GM88 |
| 50 | 191 | 20 | G 2 | 35.35 | 65.5 | 70 | GM89 |
| **Diaphragm size** | **L** | **A** | B | **h** | **H** | **Spanner width of threaded ports** | **Product key [1.)]** |
| 8 | 85 | 9.7 | Rc ¼ | 11.70 | 20.3 | 17 | RC82 |
| 15 | 102 | 13.2 | Rc ½ | 14.35 | 25.0 | 27 | RC84 |
| 20 | 118 | 14.5 | Rc ¾ | 17.15 | 30.45 | 32 | RC85 |
| 25 | 127 | 16.8 | Rc 1 | 20.55 | 37.4 | 41 | RC86 |
| 32 | 146 | 19.1 | Rc 1¼ | 25.10 | 46.3 | 50 | RC87 |
| 40 | 159 | 19.1 | Rc 1½ | 29.35 | 53.5 | 60 | RC88 |
| 50 | 191 | 23.4 | Rc 2 | 35.35 | 65.5 | 70 | RC89 |
| **Diaphragm size** | **L** | **A** | B | **h** | **H** | **Spanner width of threaded ports** | **Product key [1.)]** |
| 8 | 85 | 10 | NPT ¼ | 11.70 | 20.3 | 17 | NM82 |
| 15 | 102 | 13.7 | NPT ½ | 14.35 | 25.0 | 27 | NM84 |
| 20 | 118 | 14 | NPT ¾ | 17.15 | 30.45 | 32 | NM85 |
| 25 | 127 | 16.8 | NPT 1 | 20.55 | 37.4 | 41 | NM86 |
| 32 | 146 | 17.3 | NPT 1¼ | 25.10 | 46.3 | 50 | NM87 |
| 40 | 159 | 17.3 | NPT 1½ | 29.35 | 53.5 | 60 | NM88 |
| 50 | 191 | 17.6 | NPT 2 | 35.35 | 65.5 | 70 | NM89 |

1.) This information is part of the product key (see "9.3. Bürkert Product Enquiry Form" on page 37).

DTS 1000450587 EN Version: S Status: RL (released | freigegeben | valide) printed: 24.06.2026



valvesgo.com

## 5.7. Tube valve body (VP) with flange connection

**Note:**

- Dimensions in mm, unless otherwise stated
- Further information on the draining angle can be found in the "Additional manual Type 2xxx 3xxx" on our website (see **operating instructions Type 2031** ▶).

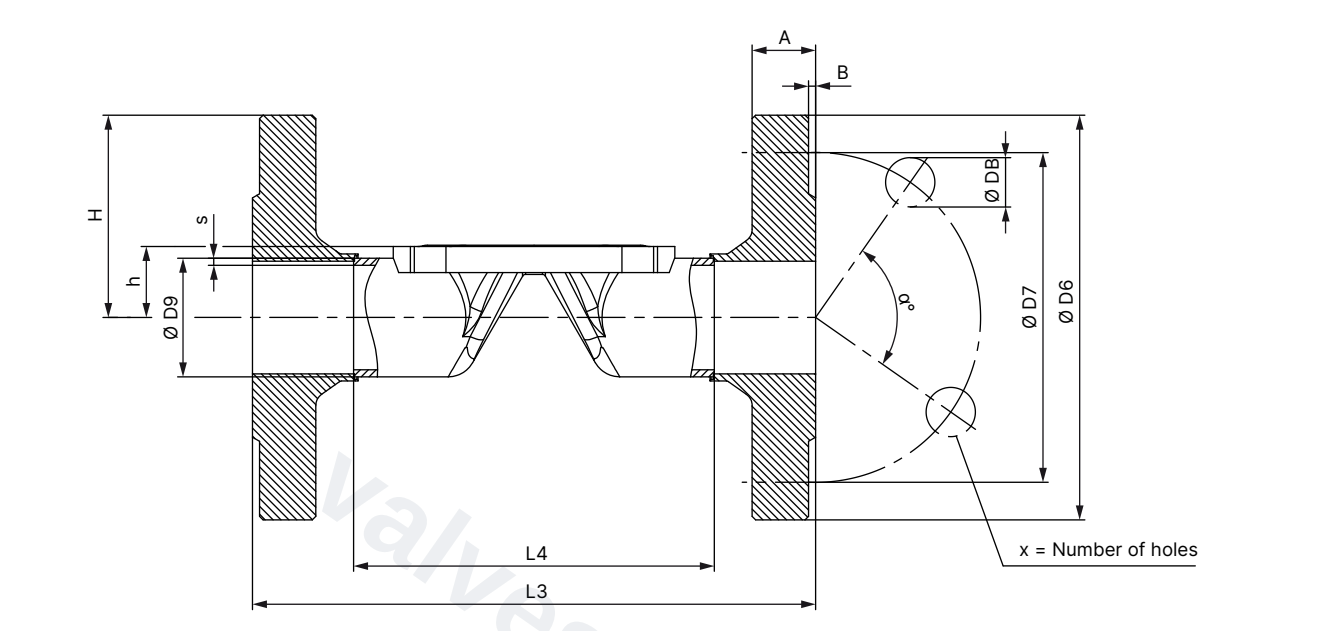


| Diaphragm size | L4 | L3 | s | ØD9 | ØD6 | ØD7 | a° | ØDB | A | B | X | Product key [1.)] |
|---|---|---|---|---|---|---|---|---|---|---|---|---|
| **DIN EN 1092 - 1** | | | | | | | | | | | | |
| 15 | 76.5 | 130 | 1.6 | 21.3 | 95 | 65 | 90 | 14 | 16 | 2 | 4 | FD22 |
| 20 | 92.5 | 150 | 1.6 | 26.9 | 105 | 75 | 90 | 14 | 18 | 2 | 4 | FD23 |
| 25 | 102.5 | 160 | 2.0 | 33.7 | 115 | 85 | 90 | 14 | 18 | 2 | 4 | FD24 |
| 32 | 122.5 | 180 | 2.0 | 42.4 | 140 | 100 | 90 | 18 | 18 | 2 | 4 | FD25 |
| 40 | 136.5 | 200 | 2.0 | 48.3 | 150 | 110 | 90 | 18 | 18 | 3 | 4 | FD26 |
| 50 | 160.5 | 230 | 2.0 | 60.3 | 165 | 125 | 90 | 18 | 20 | 3 | 4 | FD27 |
| **ANSI B16.5** | | | | | | | | | | | | |
| 15 | 67.0 | 130 | 1.6 | 21.3 | 89 | 60.5 | 90 | 15.7 | 11.2 | 1.6 | 4 | FA02 |
| 20 | 83.0 | 150 | 1.6 | 26.9 | 99 | 69.9 | 90 | 15.7 | 12.7 | 1.6 | 4 | FA03 |
| 25 | 106.0 | 160 | 2.0 | 33.7 | 108 | 79.2 | 90 | 15.7 | 14.2 | 1.6 | 4 | FA04 |
| 40 | 128.0 | 200 | 2.0 | 48.3 | 127 | 98.6 | 90 | 15.7 | 17.5 | 1.6 | 4 | FA06 |
| 50 | 151.0 | 230 | 2.0 | 60.3 | 152 | 120.7 | 90 | 19.1 | 19.1 | 1.6 | 4 | FA07 |
| **JIS 10K** | | | | | | | | | | | | |
| 15 | 89 | 130 | 1.6 | 21.3 | 95 | 70 | 90 | 15 | 12 | 1 | 4 | FJ01 |
| 20 | 103 | 150 | 1.6 | 26.9 | 100 | 75 | 90 | 15 | 14 | 1 | 4 | FJ02 |
| 25 | 116 | 160 | 2.0 | 33.7 | 125 | 90 | 90 | 19 | 14 | 1 | 4 | FJ03 |
| 40 | 147 | 200 | 2.0 | 48.3 | 140 | 105 | 90 | 19 | 16 | 2 | 4 | FJ05 |
| 50 | 175 | 230 | 2.0 | 60.3 | 155 | 120 | 90 | 19 | 16 | 2 | 4 | FJ06 |

1.) This information is part of the product key (see "9.3. Bürkert Product Enquiry Form" on page 37).

DTS 1000450587 EN Version: S Status: RL (released | freigegeben | valide) printed: 24.06.2026



valvesgo.com

## 5.8. Cast valve body (VG) with welded connection

**Note:**

- Dimensions in mm, unless otherwise stated
- Further information on the draining angle can be found in the "Additional manual Type 2xxx 3xxx" on our website (see **operating instructions Type 2031** ▶).

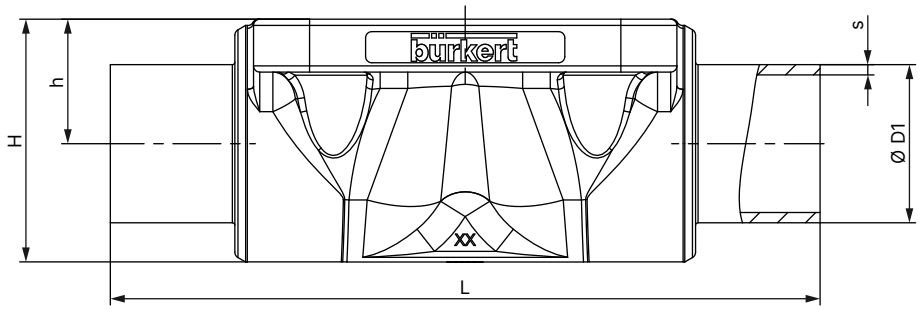


| Diaphragm size | Port connection DN | Ø D1 | s | L | h | H | Product key [1.)] |
|---|---|---|---|---|---|---|---|
| **DIN EN ISO 1127 / ISO 4200 / DIN 11866 series B** | | | | | | | |
| 6 | 8 | 13.5 | 1.6 | 72 | 8.5 | 18.0 | SA40 |
| 8 | 8 | 13.5 | 1.6 | 90 | 9.6 | 18.5 | SA40 |
| 8 | 10 | 17.2 | 1.6 | 90 | 9.6 | 18.6 | SA41 |
| 15 | 15 | 21.3 | 1.6 | 110 | 13.5 | 25.0 | SA42 |
| 20 | 15 | 21.3 | 1.6 | 119 | 18.0 | 32.9 | SA42 |
| 20 | 20 | 26.9 | 1.6 | 119 | 18.0 | 32.7 | SA43 |
| 25 | 25 | 33.7 | 2.0 | 129 | 20.0 | 39.0 | SA44 |
| 40 | 32 | 42.4 | 2.0 | 161 | 28.6 | 55.0 | SA45 |
| 40 | 40 | 48.3 | 2.0 | 161 | 28.6 | 55.0 | SA46 |
| 50 | 50 | 60.3 | 2.0 | 192 | 35.5 | 68.0 | SA47 |
| 65 | 65 | 76.1 | 2.0 | 192 | 43.0 | 82.0 | SA48 |
| 80 | 80 | 76.1 | 2.0 | 250 | 51.0 | 101.0 | SA48 |
| 80 | 80 | 88.9 | 2.3 | 250 | 51.0 | 101.0 | SA49 |
| 100 | 100 | 114.3 | 2.3 | 295 | 63.5 | 123.5 | SA39 |
| **DIN 11850 - 2 / DIN 11866 series A / DIN EN 10357 series A** | | | | | | | |
| 6 | 10 | 13 | 1.5 | 72 | 8.5 | 18.0 | SD40 |
| 8 | 10 | 13 | 1.5 | 90 | 9.6 | 18.6 | SD40 |
| 15 | 15 | 19 | 1.5 | 110 | 13.5 | 25.0 | SD42 |
| 20 | 20 | 23 | 1.5 | 119 | 18.0 | 32.8 | SD43 |
| 25 | 25 | 29 | 1.5 | 129 | 20.0 | 39.0 | SD44 |
| 40 | 40 | 41 | 1.5 | 161 | 28.6 | 55.0 | SD46 |
| 50 | 50 | 53 | 1.5 | 192 | 35.5 | 68.0 | SD47 |
| 65 | 65 | 70 | 2.0 | 192 | 43.0 | 82.0 | SD48 |
| 80 | 80 | 85 | 2.0 | 250 | 51.0 | 101.0 | SD49 |
| 100 | 100 | 104 | 2.0 | 295 | 63.5 | 123.5 | SD50 |
| **ASME BPE / DIN 11866 series C** | | | | | | | |
| 6 | ⅜" | 9.53 | 0.89 | 72 | 8.5 | 18.0 | SA91 |
| 6 | ½" | 12.7 | 1.65 | 72 | 8.5 | 18.0 | SA92 |
| 8 | ¼" | 6.35 | 0.89 | 64.5 | 9.6 | 18.6 | SA90 |
| 8 | ⅜" | 9.53 | 0.89 | 89 | 9.6 | 18.6 | SA91 |
| 8 | ½" | 12.7 | 1.65 | 89 | 9.6 | 18.6 | SA92 |
| 15 | ¾" | 19.05 | 1.65 | 102 | 13.5 | 25.0 | SA93 |
| 20 | ¾" | 19.05 | 1.65 | 119 | 18.0 | 32.8 | SA93 |
| 20 | 1" | 25.4 | 1.65 | 119 | 18.0 | 32.7 | SODF |
| 25 | 1" | 25.4 | 1.65 | 114 | 20.0 | 39.0 | SODF |
| 40 | 1½" | 38.1 | 1.65 | 140 | 28.6 | 55.0 | SODH |
| 50 | 2" | 50.8 | 1.65 | 159 | 35.5 | 68.0 | SODI |

DTS 1000450587 EN Version: S Status: RL (released | freigegeben | valide) printed: 24.06.2026



valvesgo.com

| Diaphragm size | Port connection DN | Ø D1 | s | L | h | H | Product key [1.)] |
|---|---|---|---|---|---|---|---|
| 50 | 2½" | 63.5 | 1.65 | 192 | 35.5 | 68.0 | SODJ |
| 65 | 2½" | 63.5 | 1.65 | 192 | 43.0 | 82.0 | SODJ |
| 80 | 3" | 76.2 | 1.65 | 250 | 51.0 | 101.0 | SODK |
| 100 | 4" | 101.6 | 2.11 | 295 | 63.5 | 123.5 | SODL |
| **BS 4825** | | | | | | | |
| 8 | 8 | 6.35 | 1.20 | 64.5 | 9.6 | 18.6 | SODB |
| 8 | 10 | 9.53 | 1.20 | 89 | 9.6 | 18.6 | SODC |
| 8 | 15 | 12.7 | 1.20 | 89 | 9.6 | 18.6 | SODD |
| 15 | 20 | 19.05 | 1.20 | 102 | 14.0 | 25.5 | SODE |
| 20 | 25 | 25.4 | 1.65 | 119 | 18.0 | 32.8 | SODF |
| 25 | 25 | 25.4 | 1.65 | 114 | 20.0 | 39.0 | SODF |
| 40 | 40 | 38.1 | 1.65 | 140 | 28.6 | 55.0 | SODH |
| 50 | 50 | 50.8 | 1.65 | 159 | 35.5 | 68.0 | SODI |
| 50 | 65 | 63.5 | 1.65 | 192 | 35.5 | 68.0 | SODJ |
| 65 | 65 | 63.5 | 1.65 | 192 | 43.0 | 82.0 | SODJ |
| 80 | 80 | 76.2 | 1.65 | 250 | 51.0 | 101.0 | SODK |
| 100 | 100 | 101.6 | 2.11 | 295 | 63.5 | 123.5 | SODL |
| **SMS 3008** | | | | | | | |
| 20 | 25 | 25 | 1.2 | 119 | 18.0 | 32.8 | SA60 |
| 25 | 25 | 25 | 1.2 | 129 | 20.0 | 39.0 | SA60 |
| 40 | 40 | 38 | 1.2 | 161 | 28.6 | 55.0 | SA62 |
| 50 | 50 | 51 | 1.2 | 192 | 35.5 | 68.0 | SA63 |
| **DIN 11850 series 0** | | | | | | | |
| 8 | 4 | 6 | 1.0 | 90 | 9.6 | 18.6 | SC40 |
| 8 | 6 | 8 | 1.0 | 90 | 9.6 | 18.6 | SC41 |
| 8 | 8 | 10 | 1.0 | 90 | 9.6 | 18.6 | SC42 |
| 15 | 15 | 18 | 1.5 | 110 | 13.5 | 25.0 | SC43 |
| 20 | 20 | 22 | 1.5 | 119 | 18.0 | 32.8 | SC44 |
| 25 | 25 | 28 | 1.5 | 129 | 20.0 | 39.0 | SC45 |
| 25 | 32 | 34 | 1.5 | 129 | 20.0 | 39.0 | SC46 |
| 40 | 40 | 40 | 1.5 | 161 | 28.6 | 56.0 | SC47 |
| 50 | 50 | 52 | 1.5 | 192 | 35.5 | 68.0 | SC48 |

1.) This information is part of the product key (see "9.3. Bürkert Product Enquiry Form" on page 37).

DTS 1000450587 EN Version: S Status: RL (released | freigegeben | valide) printed: 24.06.2026

valvesgo.com



valvesgo.com

## 5.9. Cast valve body (VG) with clamp connection

**Note:**

- Dimensions in mm, unless otherwise stated
- Further information on the draining angle can be found in the "Additional manual Type 2xxx 3xxx" on our website (see **operating instructions Type 2031** ▶).

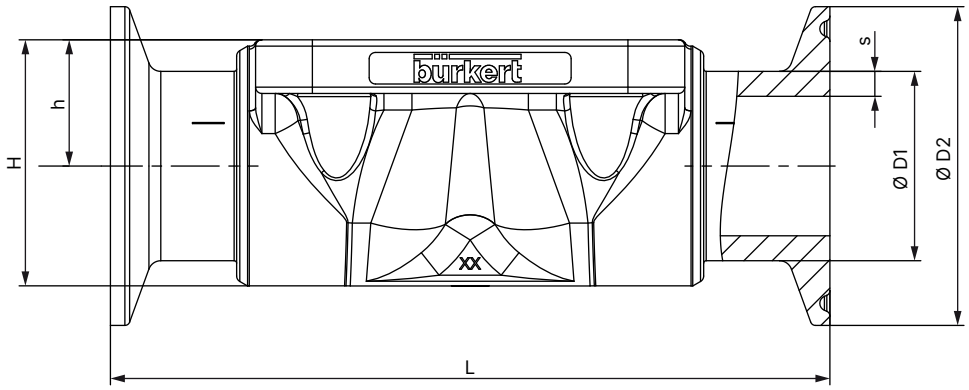


| Diaphragm size | Port connection DN | Ø D1 | s | Ø D2 | L | h | H | Product key [1.)] |
|---|---|---|---|---|---|---|---|---|
| **DIN 32676 series B (ISO pipe)** | | | | | | | | |
| 25 | 25 | 33.7 | 2 | 50.5 | 129 | 20.0 | 39.0 | TC44 |
| 40 | 40 | 48.3 | 2 | 64.0 | 161 | 28.6 | 55.0 | TC46 |
| 50 | 50 | 60.3 | 2 | 77.5 | 192 | 35.5 | 68.0 | TC47 |
| **DIN 32676 series A (DIN pipe)** | | | | | | | | |
| 15 | 15 | 19 | 1.5 | 34.0 | 110 | 13.5 | 25.0 | TD42 |
| 20 | 20 | 23 | 1.5 | 34.0 | 119 | 18.0 | 32.8 | TD43 |
| 25 | 25 | 29 | 1.5 | 50.5 | 129 | 20.0 | 39.0 | TD44 |
| 40 | 40 | 41 | 1.5 | 50.5 | 161 | 28.6 | 55.0 | TD46 |
| 50 | 50 | 53 | 1.5 | 64.0 | 192 | 35.5 | 68.0 | TD47 |
| **ASME BPE** | | | | | | | | |
| 6 | ¼" | 6.35 | 0.89 | 25.0 | 63.5 | 8.5 | 17.5 | TG50 |
| 6 | ⅜" | 9.53 | 0.89 | 25.0 | 63.5 | 8.5 | 17.5 | TG01 |
| 6 | ½" | 12.7 | 1.65 | 25.0 | 63.5 | 8.5 | 17.5 | TG02 |
| 8 | ⅜" | 9.53 | 0.89 | 25.0 | 89 | 9.6 | 18.6 | TG01 |
| 8 | ½" | 12.7 | 1.65 | 25.0 | 89 | 9.6 | 18.6 | TG02 |
| 15 | ¾" | 19.05 | 1.65 | 25.0 | 102 | 13.5 | 23.0 | TG03 |
| 20 | ¾" | 19.05 | 1.65 | 25.0 | 117 | 18.0 | 25.0 | TG03 |
| 25 | 1" | 25.4 | 1.65 | 50.5 | 114 | 18.0 | 40.0 | TG04 |
| 40 | 1½" | 38.1 | 1.65 | 50.5 | 140 | 28.6 | 55.0 | TG05 |
| 50 | 2" | 50.8 | 1.65 | 64.0 | 159 | 35.5 | 68.0 | TG06 |
| 50 | 2½" | 63.5 | 1.65 | 77.5 | 190 | 35.5 | 68.0 | TG07 |
| 65 | 2½" | 63.5 | 1.65 | 77.5 | 249.2 | 43.0 | 82.0 | TG07 |
| 80 | 3" | 76.2 | 1.65 | 91 | 306.2 | 51.0 | 101.0 | TG08 |
| 100 | 4" | 101.6 | 2.11 | 119 | 352.2 | 63.5 | 123.5 | TG09 |
| **BS 4825: Clamp BS 4825 - 3 / pipe BS 4825 - 1** | | | | | | | | |
| 8 | 15 | 12.7 | 1.2 | 25 | 89 | 9.6 | 18.9 | TH42 |
| 15 | 20 | 19.05 | 1.2 | 25 | 102 | 13.5 | 25.0 | TH43 |
| 25 | 25 | 25.4 | 1.65 | 50.5 | 114 | 20.0 | 39.0 | TG04 |
| 40 | 40 | 38.1 | 1.65 | 50.5 | 140 | 28.6 | 55.0 | TG05 |
| 50 | 50 | 50.8 | 1.65 | 64.0 | 159 | 35.5 | 68.0 | TG06 |
| 50 | 65 | 63.5 | 1.65 | 77.5 | 190 | 35.5 | 68.0 | TG07 |
| **Clamp 34.0 similar to DIN 32676 series B (ISO pipe)** | | | | | | | | |
| 15 | 15 | 21.3 | 1.6 | 34 | 110 | 13.5 | 25.0 | TC42 |

1.) This information is part of the product key (see "9.3. Bürkert Product Enquiry Form" on page 37).

DTS 1000450587 EN Version: S Status: RL (released | freigegeben | valide) printed: 24.06.2026



valvesgo.com

## 5.10. Plastic valve body (PV, PP, PD) with spigot connection

**Note:**

- Dimensions in mm. unless otherwise stated
- The specified values refer to the new plastic body. The previous bodies (REV1) may differ slightly from the new dimensions.

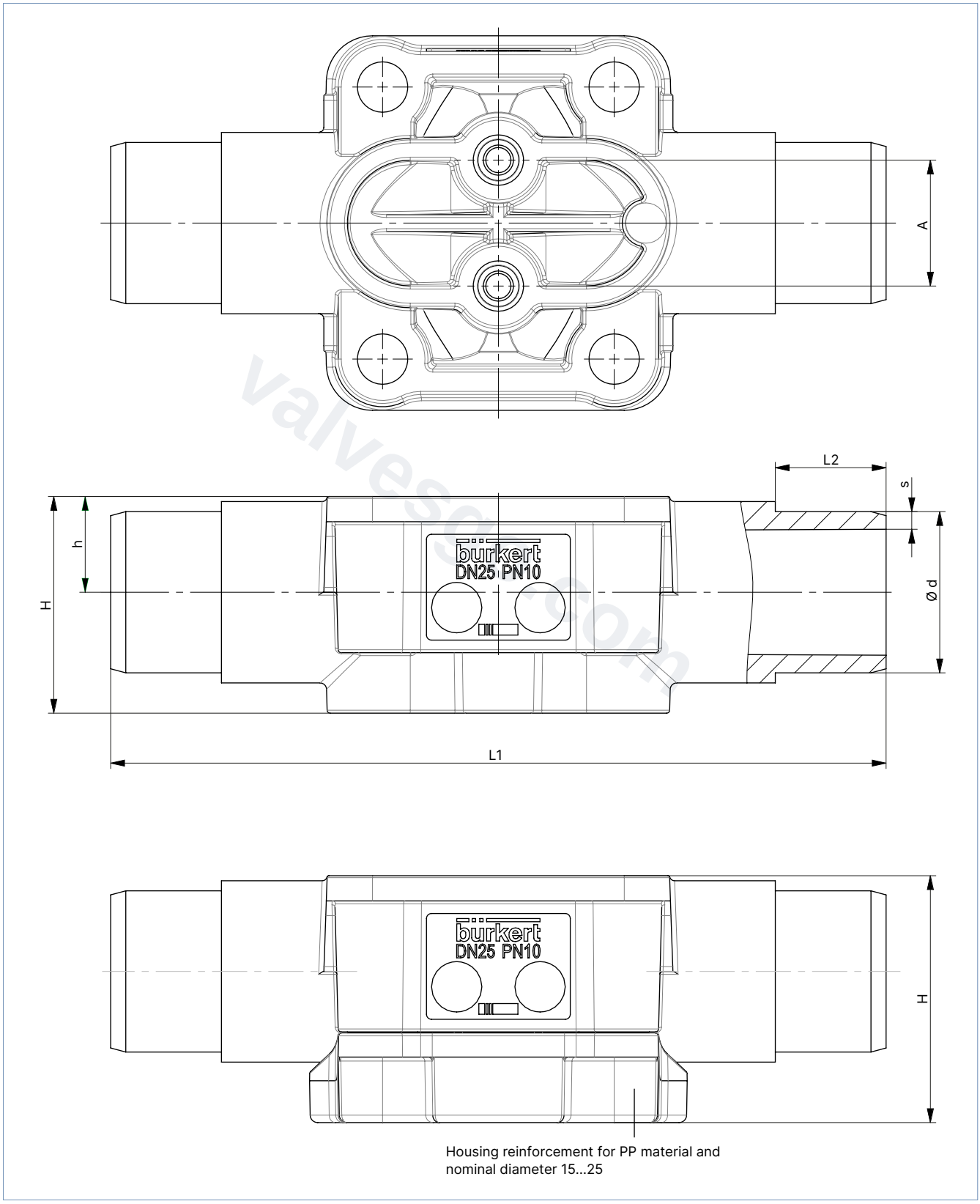


DTS 1000450587 EN Version: S Status: RL (released | freigegeben | valide) printed: 24.06.2026



valvesgo.com

| Diaphragm size | A | L1 | L2 | Ø d | s | h | H | Product key [1.)] |
|---|---|---|---|---|---|---|---|---|
| **PP (PP)** | | | | | | | | |
| 15 | 25 | 124 | 16 | 20 | 2.5 | 12 | 33 | SS25 |
| 20 | 25 | 144 | 19 | 25 | 2.5 | 17 | 42 | SS26 |
| 25 | 25 | 154 | 22 | 32 | 3.5 | 19 | 49 | SS27 |
| 32 | 45 | 174 | 26 | 40 | 4 | 25 | 52.5 | SS28 |
| 40 | 45 | 194 | 31 | 50 | 5 | 28.6 | 65.5 | SS29 |
| 50 | 45 | 224 | 44 | 63 | 6.5 | 35.5 | 79 | SS30 |
| **PVDF (PD)** | | | | | | | | |
| 15 | 25 | 124 | 16 | 20 | 2.5 | 12 | 29 | SS25 |
| 20 | 25 | 144 | 19 | 25 | 2.5 | 17 | 36 | SS26 |
| 25 | 25 | 154 | 22 | 32 | 3.5 | 19 | 43 | SS27 |
| 32 | 45 | 174 | 26 | 40 | 4 | 25 | 52.5 | SS28 |
| 40 | 45 | 194 | 31 | 50 | 5 | 28.6 | 65.5 | SS29 |
| 50 | 45 | 224 | 44 | 63 | 6.5 | 35.5 | 79 | SS30 |
| **PVC-U (PV)** | | | | | | | | |
| 15 | 25 | 124 | 16 | 20 | 2.5 | 12 | 29 | KS25 |
| 20 | 25 | 144 | 19 | 25 | 2.5 | 17 | 36 | KS26 |
| 25 | 25 | 154 | 22 | 32 | 3.5 | 19 | 43 | KS27 |
| 32 | 45 | 174 | 26 | 40 | 4 | 25 | 52.5 | KS28 |
| 40 | 45 | 194 | 31 | 50 | 5 | 28.6 | 65.5 | KS29 |
| 50 | 45 | 224 | 44 | 63 | 6.5 | 35.5 | 79 | KS30 |

1.) This information is part of the product key (see "9.3. Bürkert Product Enquiry Form" on page 37).

DTS 1000450587 EN Version: S Status: RL (released | freigegeben | valide) printed: 24.06.2026

valvesgo.com



valvesgo.com

## 5.11. Plastic valve body (PW, PV, PP, PD) with true union

**Note:**

- Dimensions in mm. unless otherwise stated
- The specified values refer to the new plastic body. The previous bodies (REV1) may differ slightly from the new dimensions.

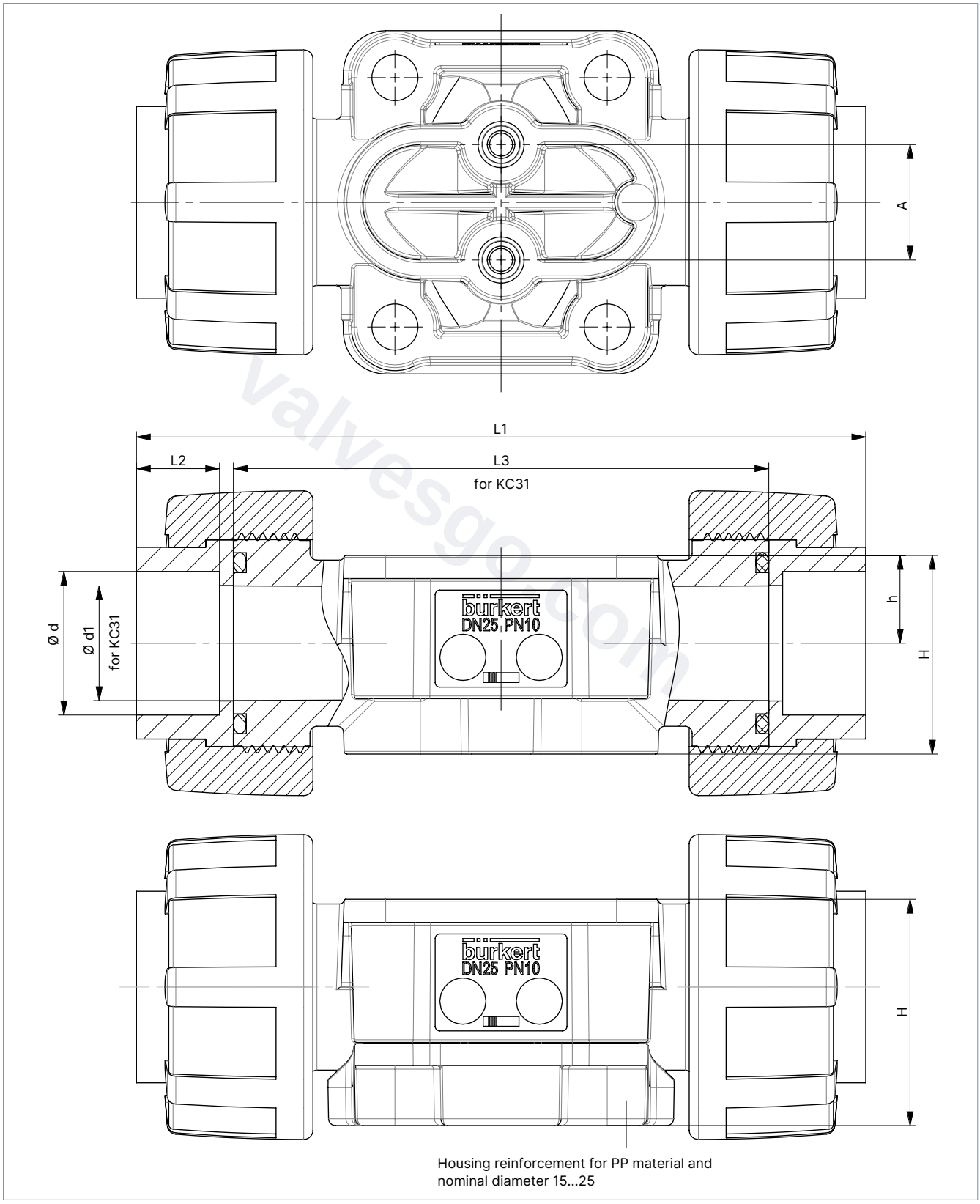


DTS 1000450587 EN Version: S Status: RL (released | freigegeben | valide) printed: 24.06.2026



valvesgo.com

| Diaphragm size | A | L1 | L2 | L3 | Ø d | Ø d1 | h | H | Product key [1)] | Variable code |
|---|---|---|---|---|---|---|---|---|---|---|
| **PP (PP)** | | | | | | | | | | |
| 15 | 25 | 125 | 14.5 | – | 19.2 | – | 12 | 33 | SM25 | – |
| 20 | 25 | 146 | 16 | – | 24.2 | – | 17 | 42 | SM26 | |
| 25 | 25 | 158 | 18 | – | 31.1 | – | 19 | 49 | SM27 | |
| 32 | 45 | 181 | 20.5 | – | 39 | – | 25 | 52.5 | SM28 | |
| 40 | 45 | 207 | 23.5 | – | 48.9 | – | 28.6 | 65.5 | SM29 | |
| 50 | 45 | 245 | 27.5 | – | 61.6 | – | 35.5 | 79 | SM30 | |
| 15 | 25 | – | – | 90 | – | 14.9 | 12 | 33 | SM25 | KC31 Port connection without insert, O-ring and union nut |
| 20 | 25 | – | – | 108 | – | 19.9 | 17 | 42 | SM26 | |
| 25 | 25 | – | – | 116 | – | 24.9 | 19 | 49 | SM27 | |
| 32 | 45 | – | – | 134 | – | 31.9 | 25 | 52.5 | SM28 | |
| 40 | 45 | – | – | 154 | – | 39.9 | 28.6 | 65.5 | SM29 | |
| 50 | 45 | – | – | 184 | – | 49.9 | 35.5 | 79 | SM30 | |
| 15 | 25 | 132 | 18 | – | 20 | – | 12 | 33 | KM25 | Optionally available with variable code KC93 insert made of PVC-C |
| 20 | 25 | 156 | 21 | – | 25 | – | 17 | 42 | KM26 | |
| 25 | 25 | 170 | 24 | – | 32 | – | 19 | 49 | KM27 | |
| 32 | 45 | 196 | 28 | – | 40 | – | 25 | 52.5 | KM28 | |
| 40 | 45 | 222 | 31 | – | 50 | – | 28.6 | 65.5 | KM29 | |
| 50 | 45 | 266 | 38 | – | 63 | – | 35.5 | 79 | KM30 | |
| **PVDF (PD)** | | | | | | | | | | |
| 15 | 25 | 125 | 14.5 | – | 19.2 | – | 12 | 29 | SM25 | – |
| 20 | 25 | 146 | 16 | – | 24.2 | – | 17 | 36 | SM26 | |
| 25 | 25 | 158 | 18 | – | 31.1 | – | 19 | 43 | SM27 | |
| 32 | 45 | 181 | 20.5 | – | 39 | – | 25 | 52.5 | SM28 | |
| 40 | 45 | 207 | 23.5 | – | 48.9 | – | 28.6 | 65.5 | SM29 | |
| 50 | 45 | 245 | 27.5 | – | 61.6 | – | 35.5 | 79 | SM30 | |
| 15 | 25 | – | – | 90 | – | 14.9 | 12 | 29 | SM25 | KC31 Port connection without insert, O-ring and union nut |
| 20 | 25 | – | – | 108 | – | 19.9 | 17 | 36 | SM26 | |
| 25 | 25 | – | – | 116 | – | 24.9 | 19 | 43 | SM27 | |
| 32 | 45 | – | – | 134 | – | 31.9 | 25 | 52.5 | SM28 | |
| 40 | 45 | – | – | 154 | – | 39.9 | 28.6 | 65.5 | SM29 | |
| 50 | 45 | – | – | 184 | – | 49.9 | 35.5 | 79 | SM30 | |
| 15 | 25 | 132 | 18 | – | 20 | – | 12 | 29 | KM25 | Optionally available with variable code KC93 insert made of PVC-C |
| 20 | 25 | 156 | 21 | – | 25 | – | 17 | 36 | KM26 | |
| 25 | 25 | 170 | 24 | – | 32 | – | 19 | 43 | KM27 | |
| 32 | 45 | 196 | 28 | – | 40 | – | 25 | 52.5 | KM28 | |
| 40 | 45 | 222 | 31 | – | 50 | – | 28.6 | 65.5 | KM29 | |
| 50 | 45 | 266 | 38 | – | 63 | – | 35.5 | 79 | KM30 | |

DTS 1000450587 EN Version: S Status: RL (released | freigegeben | valide) printed: 24.06.2026

valvesgo.com



valvesgo.com

| Diaphragm size | A | L1 | L2 | L3 | Ø d | Ø d1 | h | H | Product key [1.)] | Variable code |
|---|---|---|---|---|---|---|---|---|---|---|
| **PVC-U (PV)** | | | | | | | | | | |
| 15 | 25 | 128 | 16 | – | 20 | – | 12 | 29 | KM25 | – |
| 20 | 25 | 152 | 19 | – | 25 | – | 17 | 36 | KM26 | |
| 25 | 25 | 166 | 22 | – | 32 | – | 19 | 43 | KM27 | |
| 32 | 45 | 192 | 26 | – | 40 | – | 25 | 52.5 | KM28 | |
| 40 | 45 | 222 | 31 | – | 50 | – | 28.6 | 65.5 | KM29 | |
| 50 | 45 | 266 | 38 | – | 63 | – | 35.5 | 79 | KM30 | |
| 15 | 25 | – | – | 90 | – | 14.9 | 12 | 29 | KM25 | KC31 Port connection without insert, O-ring and union nut |
| 20 | 25 | – | – | 108 | – | 19.9 | 17 | 36 | KM26 | |
| 25 | 25 | – | – | 116 | – | 24.9 | 19 | 43 | KM27 | |
| 32 | 45 | – | – | 134 | – | 31.9 | 25 | 52.5 | KM28 | |
| 40 | 45 | – | – | 154 | – | 39.9 | 28.6 | 65.5 | KM29 | |
| 50 | 45 | – | – | 184 | – | 49.9 | 35.5 | 79 | KM30 | |
| 15 | 25 | 140.6 | 22.3 | – | 21.5 | – | 12 | 29 | KM41 | – |
| 20 | 25 | 164.8 | 25.4 | – | 26.7 | – | 17 | 36 | KM42 | |
| 25 | 25 | 179.2 | 28.6 | – | 33.5 | – | 19 | 43 | KM43 | |
| 32 | 45 | 203.6 | 31.8 | – | 42.3 | – | 25 | 52.5 | KM44 | |
| 40 | 45 | 230 | 35 | – | 48.6 | – | 28.6 | 65.5 | KM45 | |
| 50 | 45 | 266.2 | 38.1 | – | 60.6 | – | 35.5 | 79 | KM46 | |
| **PVC-C (PW)** | | | | | | | | | | |
| 15 | 25 | – | – | 90 | – | 14.9 | 12 | 29 | KM25 | KC31 Port connection without insert, O-ring and union nut |
| 20 | 25 | – | – | 108 | – | 19.9 | 17 | 36 | KM26 | |
| 25 | 25 | – | – | 116 | – | 24.9 | 19 | 43 | KM27 | |
| 32 [2.)] | 45 | – | – | 134 | – | 31.9 | 25 | 52.5 | KM28 | |
| 40 [2.)] | 45 | – | – | 154 | – | 39.9 | 28.6 | 65.5 | KM29 | |
| 50 [2.)] | 45 | – | – | 184 | – | 49.9 | 35.5 | 79 | KM30 | |
| 15 | 25 | 132 | 18 | – | 20 | – | 12 | 29 | KM25 | – |
| 20 | 25 | 156 | 21 | – | 25 | – | 17 | 36 | KM26 | |
| 25 | 25 | 170 | 24 | – | 32 | – | 19 | 43 | KM27 | |
| 32 [2.)] | 45 | 196 | 28 | – | 40 | – | 25 | 52.5 | KM28 | |
| 40 [2.)] | 45 | 222 | 31 | – | 50 | – | 28.6 | 65.5 | KM29 | |
| 50 [2.)] | 45 | 266 | 38 | – | 63 | – | 35.5 | 79 | KM30 | |

1.) This information is part of the product key (see "9.3. Bürkert Product Enquiry Form" on page 37).
2.) Available soon

DTS 1000450587 EN Version: S Status: RL (released | freigegeben | valide) printed: 24.06.2026



valvesgo.com

## 5.12. Plastic valve body (PV, PP, PD) with flange connection

**Note:**

- Dimensions in mm. unless otherwise stated
- The specified values refer to the new plastic body. The previous bodies (REV1) may differ slightly from the new dimensions.

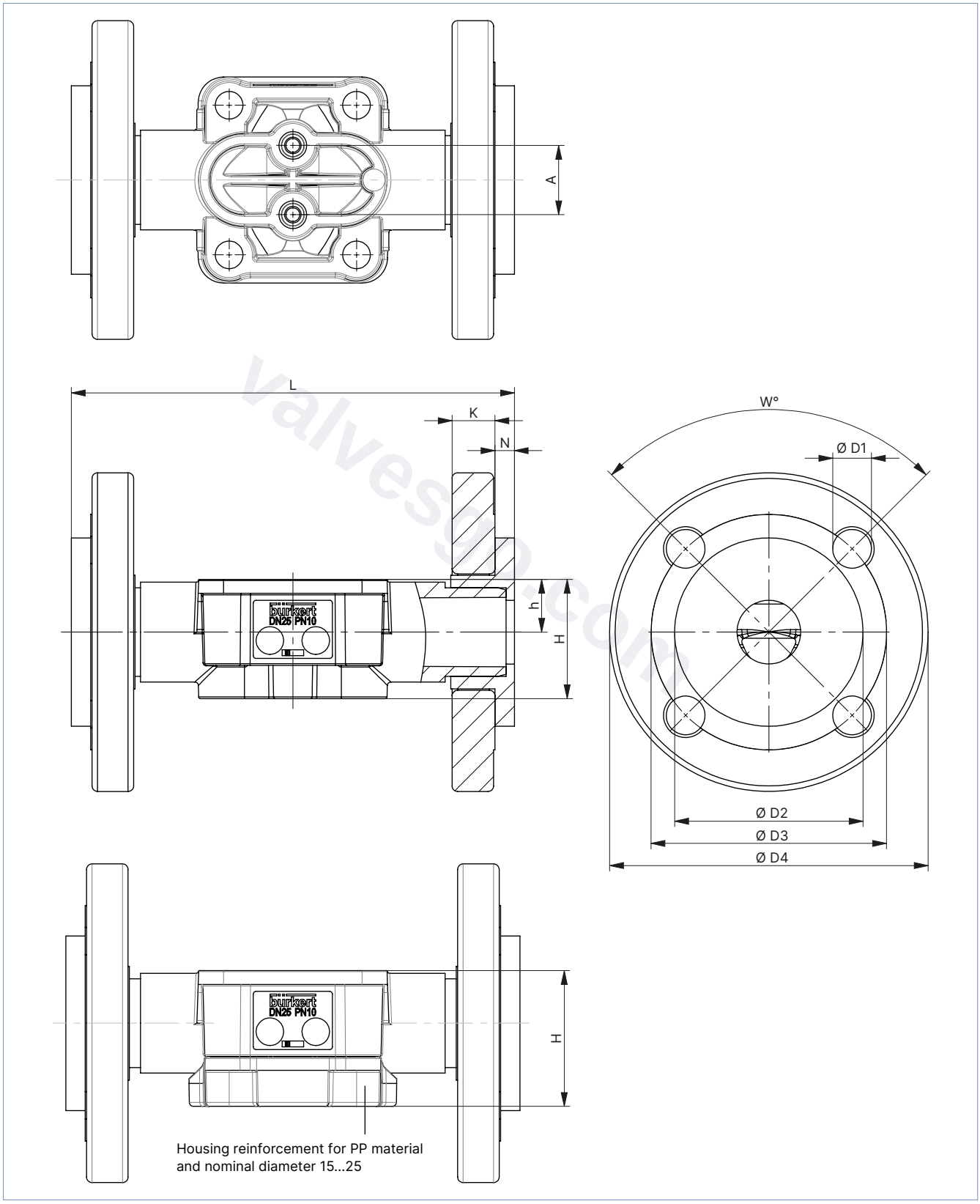


DTS 1000450587 EN Version: S Status: RL (released | freigegeben | valide) printed: 24.06.2026



valvesgo.com

| Diaphragm size | A | L | K | N | h | H | W° | Ø D1 | Ø D2 | Ø D3 | Ø D4 | Product key [1.)] |
|---|---|---|---|---|---|---|---|---|---|---|---|---|
| **PP (PP)** | | | | | | | | | | | | |
| 15 | 25 | 134 | 13.5 | 7 | 12 | 33 | 90 | 4×14 | 45 | 65 | 95 | FL24 |
| 20 | 25 | 154 | 14.5 | 7 | 17 | 42 | 90 | 4×14 | 54 | 75 | 105 | FL25 |
| 25 | 25 | 164 | 15.5 | 7 | 19 | 49 | 90 | 4×14 | 63 | 85 | 115 | FL26 |
| 32 | 45 | 184 | 17.5 | 8 | 25 | 52.5 | 90 | 4×18 | 73 | 100 | 140 | FL27 |
| 40 | 45 | 204 | 17.5 | 8 | 28.6 | 65.5 | 90 | 4×18 | 82 | 110 | 150 | FL28 |
| 50 | 45 | 234 | 19.5 | 14 | 35.5 | 79 | 90 | 4×18 | 102 | 125 | 166 | FL29 |
| 65 | 72 | 290 | 19 | – | 47 | 93 | 90 | 4×17.5 | 106 | 144 | 185 | FL30 |
| 80 | 120 | 310 | 36 | – | 50 | 107 | 45 | 8×18 | – | 160 | 200 | FF31 |
| 100 | 120 | 350 | 35 | – | 65.5 | 134.5 | 45 | 8×18 | – | 180 | 225 | FF32 |
| **PVDF (PD)** | | | | | | | | | | | | |
| 15 | 25 | 130 | 13.5 | 6 | 12 | 29 | 90 | 4×14 | 45 | 65 | 95 | FL24 |
| 20 | 25 | 150 | 14.5 | 7 | 17 | 36 | 90 | 4×14 | 58 | 75 | 105 | FL25 |
| 25 | 25 | 160 | 15.5 | 7 | 19 | 43 | 90 | 4×14 | 68 | 85 | 115 | FL26 |
| 32 | 45 | 180 | 17.5 | 8 | 25 | 52.5 | 90 | 4×18 | 78 | 100 | 140 | FL27 |
| 40 | 45 | 200 | 17.5 | 8 | 28.6 | 65.5 | 90 | 4×18 | 88 | 110 | 150 | FL28 |
| 50 | 45 | 230 | 19.5 | 9 | 35.5 | 79 | 90 | 4×18 | 102 | 125 | 166 | FL29 |
| 65 | 72 | 290 | 19 | – | 47 | 93 | 90 | 4×17.5 | 106 | 144 | 185 | FL30 |
| 80 | 120 | 310 | 36 | – | 50 | 107 | 45 | 8×18 | – | 160 | 200 | FF31 |
| 100 | 120 | 350 | 35 | – | 65.5 | 134.5 | 45 | 8×18 | – | 180 | 225 | FF32 |
| **PVC-U (PV)** | | | | | | | | | | | | |
| 15 | 25 | 130 | 13.5 | 6 | 12 | 29 | 90 | 4×14 | 34 | 65 | 95 | FL24 |
| 20 | 25 | 150 | 14.5 | 7 | 17 | 36 | 90 | 4×14 | 41 | 75 | 105 | FL25 |
| 25 | 25 | 160 | 15.5 | 7 | 19 | 43 | 90 | 4×14 | 50 | 85 | 115 | FL26 |
| 32 | 45 | 180 | 17.5 | 8 | 25 | 52.5 | 90 | 4×18 | 61 | 100 | 140 | FL27 |
| 40 | 45 | 200 | 17.5 | 8 | 28.6 | 65.5 | 90 | 4×18 | 73 | 110 | 150 | FL28 |
| 50 | 45 | 230 | 19.5 | 9 | 35.5 | 79 | 90 | 4×18 | 90 | 125 | 166 | FL29 |
| 65 | 72 | 290 | 19 | – | 47 | 93 | 90 | 4×17.5 | 106 | 144 | 185 | FL30 |
| 80 | 120 | 310 | 36 | – | 50 | 107 | 45 | 8×18 | – | 160 | 200 | FF31 |
| 100 | 120 | 350 | 35 | – | 65.5 | 134.5 | 45 | 8×18 | – | 180 | 225 | FF32 |

1.) This information is part of the product key (see "9.3. Bürkert Product Enquiry Form" on page 37).

DTS 1000450587 EN Version: S Status: RL (released | freigegeben | valide) printed: 24.06.2026



valvesgo.com

# 6. Performance specifications

## 6.1. Flow rate characteristics

**Note:**

- The $K_V$ values may vary slightly with different actuator sizes and diaphragm materials.
- More $K_V$ values are available on request.
- Flow rate: $K_V$ value water ($m^3/h$) for elastomer diaphragms
- Measurement at + 20 °C, 4 bar at valve inlet and 3 bar at valve outlet

**Forged steel valve body (VS), block body (VI)**

| Diaphragm size | Port connection | | $K_V$ value [$m^3/h$] | | | | | |
|---|---|---|---|---|---|---|---|---|
| | | | DIN EN ISO 1127 ISO 4200<br>DIN 11866 series B | DIN 11850 - 2<br>DIN 11866 series A<br>DIN EN 10357 series A | ASME BPE<br>DIN 11866 series C | DIN 11850 series 0 | BS4825 | SMS3008 |
| | [mm] | [inch] | [$m^3/h$] | [$m^3/h$] | [$m^3/h$] | [$m^3/h$] | [$m^3/h$] | [$m^3/h$] |
| 6 | 6 | ⅛ | – | – | – | 1.1 | – | – |
| 6 | 8 | ¼ | 2.2 | – | 0.7 | – | – | – |
| 6 | 10 | ⅜ | – | 2.0 | 1.6 | – | – | – |
| 6 | 15 | ½ | – | – | 2.0 | – | – | – |
| 8 | 6 | ⅛ | – | – | – | 1.1 | – | – |
| 8 | 8 | ¼ | 1.5 | – | 0.7 | 1.7 | 0.5 | – |
| 8 | 10 | ⅜ | 1.5 | 1.5 | 1.6 | – | 1.4 | – |
| 8 | 15 | ½ | – | – | 1.9 | – | – | – |
| 15 | 10 | ⅜ | 5.5 | 3.5 | – | – | – | – |
| 15 | 15 | ½ | 6.5 | 6.5 | 3.1 | – | 3.7 | – |
| 15 | 20 | ¾ | – | – | 6.5 | – | – | – |
| 20 | 20 | ¾ | 12.5 | 12.4 | 8.4 | – | 8.9 | – |
| 25 | 25 | 1 | 18 | 20 | 15.5 | – | 15.5 | 16 |
| 40 | 32 | 1¼ | – | 34 | – | – | – | – |
| 40 | 40 | 1½ | 41 | 40 | 37 | – | 37 | 38 |
| 50 | 50 | 2 | 66 | 66 | 66 | – | 66 | 66 |
| 50 | 65 | 2½ | – | – | 66 | – | 66 | 66 |
| 65 | 65 | 2½ | 110 | – | 110 | – | – | – |
| 80 | 80 | 3 | 160 | 160 | 160 | – | – | – |
| 100 | 100 | 4 | 235 | 235 | 235 | – | – | – |

DTS 1000450587 EN Version: S Status: RL (released | freigegeben | valide) printed: 24.06.2026

valvesgo.com



valvesgo.com

### Tube valve body (VP)

| Diaphragm size | Port connection | | $K_V$ value [m³/h] | | |
|---|---|---|---|---|---|
| | | | DIN EN ISO 1127<br>ISO 4200<br>DIN 11866 series B | DIN 11850 - 2<br>DIN 11866 series A<br>DIN EN 10357 series A | ASME BPE<br>DIN 11866 series C |
| | [mm] | [inch] | [m³/h] | [m³/h] | [m³/h] |
| 8 | 8 | ¼ | 1.9 | – | – |
| 8 | 10 | ⅜ | 1.7 | 1.9 | – |
| 8 | 15 | ½ | – | – | 1.8 |
| 15 | 15 | ½ | 7.2 | 7.4 | – |
| 15 | 20 | ¾ | – | 7.4 | 7.1 |
| 20 | 20 | ¾ | 13.5 | – | – |
| 20 | 25 | 1 | – | 14.9 | 12.8 |
| 25 | 32 | 1¼ | – | 22.3 | – |
| 25 | 25 | 1 | 20.8 | – | – |
| 32 | 32 | 1¼ | 36 | – | – |
| 32 | 40 | 1½ | – | 34.8 | 31 |
| 40 | 40 | 1½ | 47.9 | – | – |
| 40 | 50 | 2 | – | 46.2 | 43 |
| 50 | 50 | 2 | 69.7 | – | – |
| 50 | 65 | 2½ | – | – | 60 |
| 65 | 80 | 3 | – | – | 75 |
| 80 | 100 | 4 | – | – | 145 |

### Cast valve body (VG)

| Diaphragm size | Port connection | | $K_V$ value |
|---|---|---|---|
| | [mm] | [inch] | [m³/h] |
| 6 | 8 | ¼ | 1 |
| 8 | 8 | ¼ | 1 |
| 15 | 15 | ½ | 5.6 |
| 20 | 20 | ¾ | 10.7 |
| 25 | 25 | 1 | 14.6 |
| 40 | 40 | 1½ | 35 |
| 50 | 50 | 2 | 47 |
| 65 | 65 | 2½ | 110 |
| 80 | 80 | 3 | 130 |
| 100 | 100 | 4 | 150 |

DTS 1000450587 EN Version: S Status: RL (released | freigegeben | valide) printed: 24.06.2026

valvesgo.com



valvesgo.com

**Plastic valve body (PW, PV, PP, PD)**

| Diaphragm size | Seal material | Port connection | | $K_V$ value | |
|---|---|---|---|---|---|
| | | | | Previous plastic valve body Product key REV1 | New plastic valve body |
| | | [mm] | [inch] | [m³/h] | |
| 15 | EPDM | 15 | ½ | 3 | 8.1 |
| | PTFE/EPDM | | | | 7.5 |
| 20 | EPDM | 20 | ¾ | 7 | 14.1 |
| | PTFE/EPDM | | | | 13.1 |
| 25 | EPDM | 25 | 1 | 11.4 | 25.5 |
| | PTFE/EPDM | | | | 21.5 |
| 32 | EPDM | 32 | 1¼ | 17 | 38.5 |
| | PTFE/EPDM | | | | 37.5 |
| 40 | EPDM | 40 | 1½ | 24.5 | 57 |
| | PTFE/EPDM | | | | 56 |
| 50 | EPDM | 50 | 2 | 41.5 | 92 |
| | PTFE/EPDM | | | | 92 |
| 65 | EPDM | 65 | 2½ | 60 | – |
| | PTFE/EPDM | | | | |
| 80 | EPDM | 80 | 3 | 105 | – |
| | PTFE/EPDM | | | | |
| 100 | EPDM | 100 | 4 | 154 | – |
| | PTFE/EPDM | | | | |

DTS 1000450587 EN Version: S Status: RL (released | freigegeben | valide) printed: 24.06.2026

valvesgo.com



valvesgo.com

## 6.2. Medium pressure

**Specifications for control function A**

**Note:**

- For low operating pressures, optional variants with reduced spring force (EC04) are recommended.
- Pressure data [bar]: Overpressure to atmospheric pressure. Static: When closed, the valve is pressurised on one side with the maximum operating pressure.
- Specifications for control functions B and I are available on request.

| Diaphragm size | Actuator size Ø | Pilot pressure | Maximum static operating pressure for seal materials | |
|---|---|---|---|---|
| | | | EPDM, FKM | PTFE/EPDM, advanced PTFE/EPDM, laminate of GYLON® and EPDM |
| | [mm] | [bar] | [bar] | [bar] |
| 6 | 40 (C) | 5.0...7 | 10 1.) | 10 2.) |
| 8 | 40 (C) | 5.0...7 | 10 | 10 |
| 15 | 50 (D) | 5.0...7 | 10 | – |
| | 63 (E) | 5.0...7 | 10 | 10 |
| 20 | 63 (E) | 5.5...7 | 10 | 10 |
| | 80 (F) | 5.0...7 | 10 | 10 |
| 25 | 80 (F) | 5.5...7 | 10 | 10 |
| 32 | 100 (G) | 5.5...7 | 10 | 10 |
| 40 | 100 (G) | 5.5...7 | 10 | 9 3.) |
| | 125 (H) | 5.5...7 | 10 | 10 |
| 50 | 125 (H) | 5.5...7 | 10 | 10 |
| 65 | 175 (K) | 5.0...6 | 10 | 6 |
| 80 | 175 (K) | 5.0...6 | 7 | 4 4.) |
| | 225 (L) | 5.0...6 | 10 | 10 |
| 100 | 225 (L) | 5.0...6 | 10 | 7 |

1.) EPDM (AD diaphragm) only available
2.) Laminate of GYLON® and EPDM (ER diaphragm) only available
3.) The maximum operating pressure for laminate of GYLON® and EPDM (ER diaphragm) is 6 bar.
4.) The tightness value only applies to laminate of GYLON® and EPDM (ER diaphragm), otherwise 0 bar for PTFE/EPDM and advanced PTFE/EPDM (EA and EU diaphragms).

DTS 1000450587 EN Version: S Status: RL (released | freigegeben | valide) printed: 24.06.2026

valvesgo.com



valvesgo.com

## 7. Product accessories

| Electric position feedback indicator | |
|---|---|
| **Type 8697 ▸ Actuator size Ø 40...225 mm** | |
| | The position feedback Type 8697 is designed for integrated mounting on CLASSIC series 20XX process valves, suiting the requirements of hygienic process environments. Mechanical or inductive limit switches register the position of the valve.<br><br>**Features**<br>• Compact design<br>• LED position indicator<br>• Mechanical or inductive limit switches for end position registering<br>• Easy-to-clean clean chemically resistant housing featuring IP65/IP67, 4X Rating<br>• Optionally intrinsically safe variant according to IECEx<br><br>**Customer benefits**<br>• Easy and quick installation<br>• High level of signal reliability thanks to self-adjusting limit switches<br>• Minimised space requirement in the plant piping for more flexibility in plant design |

valvesgo.com

DTS 1000450587 EN Version: S Status: RL (released | freigegeben | valide) printed: 24.06.2026



valvesgo.com

## 8. Networking and combination with other Bürkert products

**Note:**
The **on/off CLASSIC valve system Type 8801-DA (alternatively 8801-DB)** consists of a **diaphragm valve Type 2030 (alternatively Type 2031)** and a **position feedback Type 8697.**

You order two components and receive a completely assembled and tested valve.

**Example:**

**Diaphragm valve**

**Type 2030**
**Type 2031**

**Position feedback**

**Type 8697** ▸
Pneumatic control for decentralised automation of ELEMENT process valves

**Ventilsystem on/off CLASSIC**

**Valve system**
**Type 8801-DA-U**
**Type 8801-DB-U**

DTS 1000450587 EN Version: S Status: RL (released | freigegeben | valide) printed: 24.06.2026

valvesgo.com



valvesgo.com

# 9. Ordering information

## 9.1. Bürkert eShop

**Bürkert eShop – Easy ordering and quick delivery**

You want to find your desired Bürkert product or spare part quickly and order directly? Our online shop is available for you 24/7. Sign up and enjoy all the benefits.

Order online now

## 9.2. Bürkert product filter

**Bürkert product filter – Get quickly to the right product**

You want to select products comfortably based on your technical requirements?
Use the Bürkert product filter and find suitable articles for your application quickly and easily.

Try out our product filter

## 9.3. Bürkert Product Enquiry Form

**Note:**
Please see our Product Enquiry Form for a full explanation of our specification key.

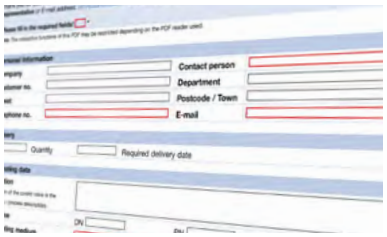


**Bürkert Product Enquiry Form – Your enquiry quickly and compactly**

Would you like to make a specific product enquiry based on your technical requirements? Use our Product Enquiry Form for this purpose. There you will find all the relevant information for your Bürkert contact. This will enable us to provide you with the best possible advice.

Fill out the form now

DTS 1000450587 EN Version: S Status: RL (released | freigegeben | valide) printed: 24.06.2026


valvesgo.com