bürkert
FLUID CONTROL SYSTEMS

T-diaphragm valve with pneumatic plastic actuator (Type CLASSIC)

- Valve body and diaphragm are available in various materials and variants
- Wetted surfaces from Ra ≤ 0.38 µm...≤ 1.6 µm (optionally electropolished)
- Available in all common connection sizes and variants

Product variants described in the data sheet may differ from the product presentation and description.

Can be combined with

Type SV02
Diaphragms

Type 2034
Multifunction block solutions

Type 2933
2/2-way diaphragm valve with manually operated actuator (basic)

Type 2036
Robolux multiway diaphragm valve, pneumatically operated

Type 8690
Pneumatic control unit for decentralised automation of process valves ELEMENT

Type 8697
Pneumatic control unit for decentralised automation of process valves ELEMENT

Type 8098
FLOWave SAW flowmeter

Type description

The externally controlled diaphragm valve Type 2032 consists of a pneumatically operated piston actuator, a diaphragm and a T-valve body. The proven and robust actuator with a plastic housing ensures use in hygienic or aggressive ambient conditions. The flow-efficient valve bodies with little dead space enable high flow rates and a wide range of possible uses. The valve body and the diaphragm are available in all common materials and variants. The actuator has a compact, autoclavable design (PPS variant). The integration of the automation units Type 8690/8697 is possible in all configuration levels (can be retrofitted). An explosion-proof ATEX/IECEx device variant is available.

The add-on body is optionally available in plastic or stainless steel. The actuator is equipped with an integrated, optical position indicator as standard, optionally a minimum/maximum stroke limiter can be installed.

DTS 1000450589 EN Version: M Status: RL (released | freigegeben | valide) printed: 08.07.2026

© Christian Bürkert GmbH & Co. KG, Subject to alteration

Visit product website

valvesgo.com

Table of contents

1. General technical data 3

2. Control functions 4

3. Approvals and conformities 5

3.1. General notes 5
3.2. Conformity 5
3.3. Standards 5
3.4. Explosion protection 5
3.5. Foods and beverages/Hygiene 5
3.6. Others 6

4. Materials 6

4.1. Bürkert resistApp 6
4.2. Material specifications 7
4.3. Example of available diaphragm materials 8

5. Dimensions 9

5.1. Actuator 9
CLASSIC actuator with interface for block mounting (MT85) 9
CLASSIC actuator with control unit Type 8697 10
5.2. T-Body with welded connection 11
5.3. T-Body with clamp connection 15

6. Performance specifications 16

6.1. Medium pressure 16

7. Product accessories 17

8. Networking and combination with other Bürkert products 18

9. Ordering information 19

9.1. Bürkert eShop 19
9.2. Bürkert product filter 19
9.3. Bürkert Product Enquiry Form 19

DTS 1000450589 EN Version: M Status: RL (released | freigegeben | valide) printed: 08.07.2026

valvesgo.com

valvesgo.com

1. General technical data

Product properties	
Dimensions	Further information can be found in chapter "5. Dimensions" on page 9.
Material	
Block body (VH) [1.]	Stainless steel block material 1.4435 according to DIN EN 10088 and 316L according to ASTM A479 / A479M
Block body (VI) [1.]	Stainless steel block material 1.4435 according to DIN EN 10088 and 316L according to ASME BPE (Table MM- 2.1.1, Ed. 2024) BN2 available on request
Diaphragm	EPDM (AD) [1.], PTFE/EPDM (EA) [1.], Advanced PTFE/EPDM (EU) [1.], laminate of GYLON® and EPDM (ER) [1.]
Actuator	PPS, PA
Diaphragm size	8...100
Standard surface quality	
Block body (VH/VI) [1.]	Internally electrically polished: Ra ≤ 0.38 µm (NO17) [1.] (ASME BPE SF4 / DIN HE4) (externally Ra ≤ 1.6 µm) Internally mechanically polished: Ra ≤ 0.5 µm (NO14) [1.] (ASME BPE SF1) (externally Ra ≤ 1.6 µm)
Performance data	
Maximum pilot pressure (CF A)	7 bar (for actuator size 40 [1.]...125 [1.]/PPS) 6 bar (for actuator size 175 [1.] and 225 [1.]/PA) See "6.1. Medium pressure" on page 16
Pilot air port	Thread G ¼, thread G ⅛ for actuator size 40 and 50
Medium data	
Operating medium	Neutral gases and liquids, highly purified, sterile, aggressive or abrasive mediums (see **resistance chart** ▶)
Medium temperature	
EPDM (AD) [1.]	- 10 °C...+ 143 °C (steam sterilisation [3.] max.+ 150 °C for 60 min)
PTFE/EPDM (EA) [1.]	- 10 °C...+ 130 °C (steam sterilisation [3.] max.+ 140 °C for 60 min)
Advanced PTFE/EPDM (EU) [1.]	- 5 °C...+ 143 °C (steam sterilisation [3.] max.+ 150 °C for 60 min)
Laminate of GYLON® and EPDM (ER) [1.]	- 5 °C...+ 130 °C (steam sterilisation [3.] max.+ 140 °C for 60 min)
Control medium	Neutral gases, air
Product connections	
Port connection [2.]	
Nominal diameter	DN 06...DN 100 (⅛"...4")
Stainless steel body [2.]	
Welded connection [2.]	DIN EN ISO 1127 / ISO 4200 / DIN 11866 series B DIN 11850 - 2 / DIN 11866 series A / DIN EN 10357 series A ASME BPE / DIN 11866 series C
Clamp connection [2.]	DIN 32676 series A (DIN pipe) DIN 32676 series B (ISO pipe) ASME BPE
Environment and installation	
Installation position	See **operating manual Type 2032** ▶
Ambient temperature	
PPS, actuator size ≤ 80 mm	+ 5 °C...+ 140 °C
PPS, actuator size 100 mm, 125 mm	+ 5 °C...+ 90 °C (short-term up to + 140 °C)
PA, actuator size ≤ 125 mm	- 10 °C...+ 60 °C
PA, actuator size ≥ 175 mm	- 10 °C...+ 50 °C

1.) This information is part of the product key (see "9.3. Bürkert Product Enquiry Form" on page 19).
2.) Other variants are available on request.
3.) Extending the sterilisation time is permitted, but may affect the service life and maintenance intervals.

DTS 1000450589 EN Version: M Status: RL (released | freigegeben | valide) printed: 08.07.2026

valvesgo.com

2. Control functions

Symbol	Description
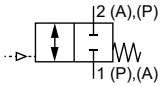	**Control function A (CF A)** Pneumatically operated T-valve Normally closed by spring force
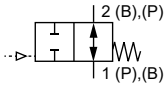	**Control function B (CF B)** Pneumatically operated T-valve Normally opened by spring force
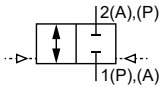	**Control function I (CF I)** Pneumatically operated T-valve on either side Switching position dependent on external control

DTS 1000450589 EN Version: M Status: RL (released | freigegeben | valide) printed: 08.07.2026

valvesgo.com

valvesgo.com

3. Approvals and conformities

3.1. General notes

- The approvals and conformities listed below must be stated when making enquiries. This is the only way to ensure that the product complies with all required specifications.
- Not all available variants can be supplied with the below mentioned approvals or conformities.

3.2. Conformity

In accordance with the Declaration of Conformity, the product is compliant with the EU Directives.

3.3. Standards

The applied standards which are used to demonstrate compliance with the EU Directives are listed in the EU-Type Examination Certificate and/or the EU Declaration of Conformity.

3.4. Explosion protection

<table>
<tr><th>Approval</th><th>Description</th></tr>
<tr><td></td><td>
Optional: Explosion protection (valid for the variable code PX51)
As a category 2 device suitable for zone 1/21 and zone 2/22.

ATEX:
EPS 18 ATEX 2 008 X
II 2G Ex h IIC T4...T2 Gb
II 2D Ex h IIIC T135 °C...T300 °C Db

IECEx:
IECEx EPS 18.0007X
Ex h IIC T4...T2 Gb
Ex h IIIC T135 °C...T300 °C Db
<table>
<tr><td>Temperature class</td><td>T2</td><td>T3</td><td>T4</td></tr>
<tr><td>Maximum surface temperature</td><td>+ 300 °C</td><td>+ 200 °C</td><td>+ 135 °C</td></tr>
<tr><td>Ambient temperature</td><td>- 40 °C...+ 130 °C</td><td>- 40 °C...+ 130 °C</td><td>- 40 °C...+ 100 °C</td></tr>
<tr><td>Maximum medium temperature</td><td>+ 285 °C</td><td>+ 185 °C</td><td>+ 125 °C</td></tr>
</table>
Note: The ambient and medium temperature range may be limited by non-ex-relevant specifications. Observe the Operating Instructions.
</td></tr>
</table>

3.5. Foods and beverages/Hygiene

Conformity	Description
	3-A Sanitary Standards Inc. (valid for the variable code PE05) The products comply with 3-A Sanitary Standards Inc (3-A SSI) as per certificate.
FDA	**FDA – Code of Federal Regulations** The diaphragms made of EPDM (AD), PTFE/EPDM (EA), Advanced PTFE/EPDM (EU) and laminate of GYLON® and EPDM (ER) comply with the Code of Federal Regulations published by the FDA (Food and Drug Administration, USA).
USP	**United States Pharmacopeial Convention (USP)** The diaphragms made of EPDM (AD), PTFE/EPDM (EA), Advanced PTFE/EPDM (EU) and laminate of GYLON® and EPDM (ER) are tested according to USP Class VI.
	EC Regulation 1935/2004 of the European Parliament and of the Council The diaphragms made of EPDM (AD), PTFE/EPDM (EA), Advanced PTFE/EPDM (EU) and laminate of GYLON® and EPDM (ER) are suitable for use with food and beverages (according to EC Regulation 1935/2004/EC).

DTS 1000450589 EN Version: M Status: RL (released | freigegeben | valide) printed: 08.07.2026

valvesgo.com

3.6. Others

Conformity	Description
TA Luft	Technical instruction on air quality control (valid for the variable code PM01)

4. Materials

4.1. Bürkert resistApp

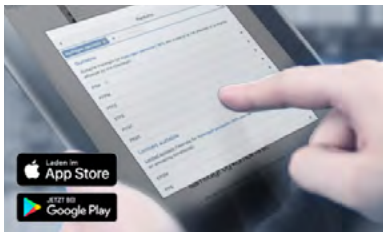

Bürkert resistApp – Chemical resistance chart

You want to ensure the reliability and durability of the materials in your individual application case? Verify your combination of media and materials on our website or in our resistApp.

Start chemical resistance check

DTS 1000450589 EN Version: M Status: RL (released | freigegeben | valide) printed: 08.07.2026

valvesgo.com

valvesgo.com

4.2. Material specifications

Actuator size 40...125

Note:
The exemplary representation may differ from the actual product.

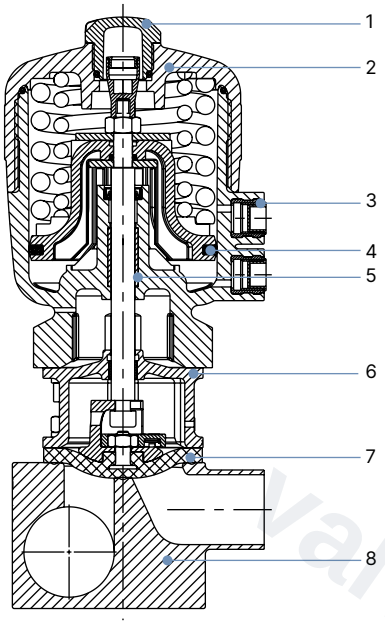

No.	Element	Material
1	Transparent cap	Polysulfone PSU
2	Cover	Polyphenylene sulphide PPS (standard) Polyamide PA (on request)
3	Pilot air ports	Stainless steel 1.4305
4	Piston seal	FKM
5	Socket	Sinter metal
6	Interface	Stainless steel 1.4404
7	Diaphragm	EPDM (AD), PTFE/EPDM (EA), Advanced PTFE/EPDM (EU), laminate of GYLON® and EPDM (ER)
8	Valve body	See **"1. General technical data" on page 3**

Actuator size 175 and 225

Note:
The exemplary representation may differ from the actual product.

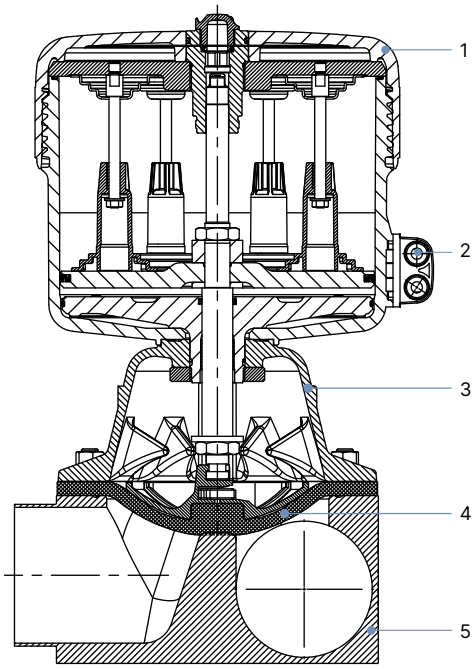

No.	Element	Material
1	Cover	Polyamide PA
2	Pilot air ports	Stainless steel 1.4305
3	Diaphragm bonnet	Stainless steel 1.4308
4	Diaphragm	EPDM (AD), PTFE/EPDM (EA), Advanced PTFE/EPDM (EU), laminate of GYLON® and EPDM (ER)
5	Valve body	See **"1. General technical data" on page 3**

DTS 1000450589 EN Version: M Status: RL (released | freigegeben | valide) printed: 08.07.2026

valvesgo.com

4.3. Example of available diaphragm materials

The diaphragms have been developed to meet the unique challenges of hygienic and sterile requirements. Bürkert offers diaphragms with precise material composition and high accuracy. Bürkert diaphragms are available in a wide range of materials which have been tested and proven in applications in the food and beverage, biotechnology, pharmaceutical and cosmetics industries. The diaphragms are tested during development and production to ensure reliability under difficult process conditions.

- EPDM (AD)
- PTFE/EPDM (EA)
- Advanced PTFE/EPDM (EU)
- Laminate of GYLON® and EPDM (ER)

Further information can be found in our flyer “Diaphragm competence for hygienic applications” on our **website** ▶.

DTS 1000450589 EN Version: M Status: RL (released | freigegeben | valide) printed: 08.07.2026

valvesgo.com

valvesgo.com

5. Dimensions

5.1. Actuator

CLASSIC actuator with interface for block mounting (MT85)

Note:
Dimensions in mm, unless otherwise stated

Diaphragm size 8...50	Diaphragm size 65...100
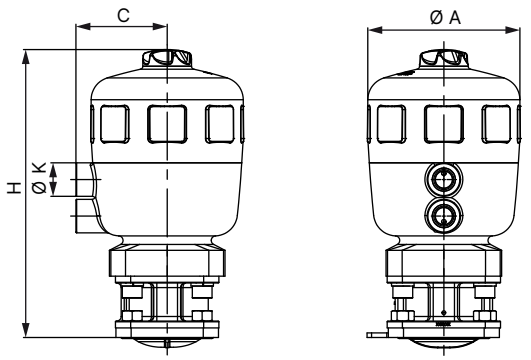	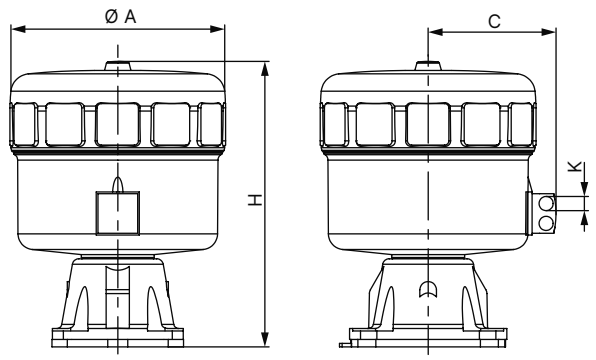

Diaphragm size	Actuator size Ø	Ø A	C	K	H
8	40 (C)	53	34	G ⅛"	111
15	50 (D)	64	39	G ⅛"	137
	63 (E)	80	52	G ¼"	154
20	63 (E)	80	52	G ¼"	165
	80 (F)	101	52	G ¼"	186
25	63 (E)	80	52	G ¼"	170
	80 (F)	101	60	G ¼"	190
40	100 (G)	127	73	G ¼"	246
	125 (H)	158	86	G ¼"	284
50	100 (G)	127	73	G ¼"	254
	125 (H)	158	86	G ¼"	288
65	175 (K)	211	130	G ¼"	350
80	175 (K)	211	130	G ¼"	350
	225 (L)	261	155	G ¼"	345
100	225 (L)	261	155	G ¼"	345

valvesgo.com

DTS 1000450589 EN Version: M Status: RL (released | freigegeben | valide) printed: 08.07.2026

valvesgo.com

CLASSIC actuator with control unit Type 8697

Note:
Dimensions in mm, unless otherwise stated

Control unit MT85

Diaphragm size 8...50

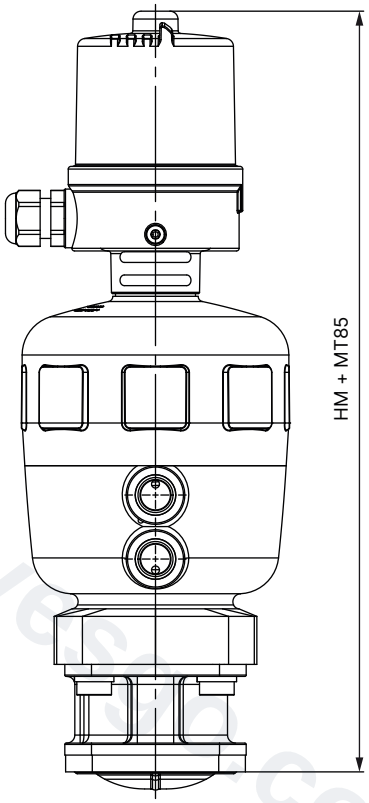

Diaphragm size	Actuator size Ø	HM + MT85
8	40 (C)	207
15	50 (D)	233
	63 (E)	249
20	63 (E)	261
	80 (F)	281
25	63 (E)	266
	80 (F)	286
40	100 (G)	339
	125 (H)	377
50	100 (G)	347
	125 (H)	381
65	175 (K)	437
80	175 (K)	446
	225 (L)	440
100	225 (L)	440

DTS 1000450589 EN Version: M Status: RL (released | freigegeben | valide) printed: 08.07.2026

valvesgo.com

5.2. T-Body with welded connection

Note:
Dimensions in mm, unless otherwise stated

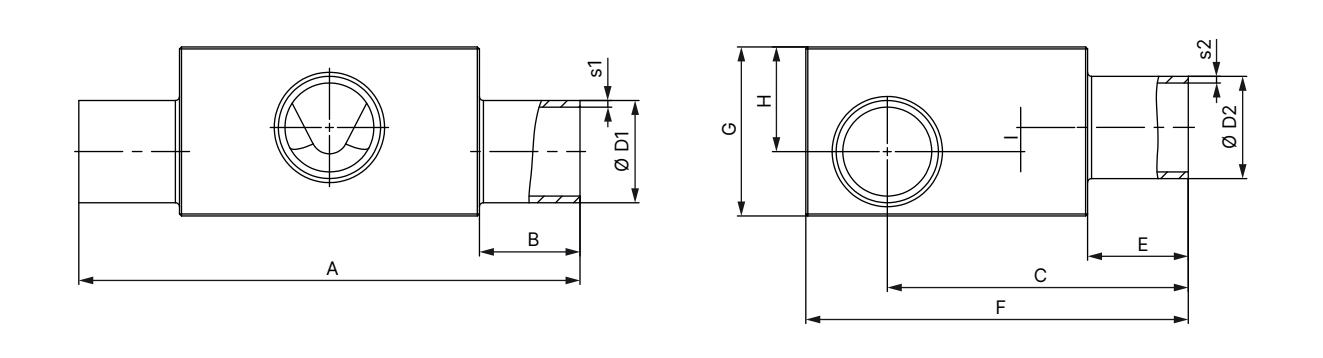

Diaphragm size	Port 1 – Port 2 DN	Ø D1	s1	Ø D2	s2	A	B	C	E	F	G	H	I	Product key [1.)] (Port 1 – Port 2)
DIN EN ISO 1127 / ISO 4200 / DIN 11866 series B														
8	8...8	13.5	1.6	13.5	1.6	78.0	20	47.2	20	60	24	15	5.0	SA40-SA40
	10...8	17.2		13.5		78.0		49.0		60	29	18	8.0	SA41-SA40
	10...10	17.2		17.2		78.0		49.0		60	29	18	8.0	SA41-SA41
	15...8	21.3		13.5		78.0		51.1		64	34	21	11.0	SA42-SA40
	15...10	21.3		17.2		78.0		51.1		64	34	21	11.0	SA42-SA41
	20...8	26.9		13.5		88.0	25	53.9		70	38	23	13.0	SA43-SA40
	20...10	26.9		17.2		88.0		53.9		70	38	23	13.0	SA43-SA41
	25...8	33.7	2.0	13.5		88.0		53.9		76	45	26	16.0	SA44-SA40
	25...10	33.7		17.2		88.0		53.9		76	45	26	16.0	SA44-SA41
	32...8	42.4		13.5		88.0		60.5		84	52	29	19.0	SA45-SA40
	32...10	42.4		17.2		88.0		61.2		84	52	29	19.0	SA45-SA41
	40...8	48.3		13.5		88.0		64.2		90	57	31	21.0	SA46-SA40
	40...10	48.3		17.2		88.0		64.2		90	57	31	20.0	SA46-SA41
	50...8	60.3		13.5		98.0	30	70.2		102	66	34	24.0	SA47-SA40
	50...10	60.3		17.2		98.0		70.2		102	66	34	24.0	SA47-SA41
	65...8	76.1		13.5		98.0		78.1		118	80	40	30.0	SA48-SA40
	80...8	88.9	2.3	13.5		98.0		84.2		131	92	46	36.0	SA49-SA40
	80...10	88.9		17.2		98.0		84.2		131	92	46	35.0	SA49-SA41

DTS 1000450589 EN Version: M Status: RL (released | freigegeben | valide) printed: 08.07.2026

valvesgo.com

Diaphragm size	Port 1 – Port 2 DN	ØD1	s1	ØD2	s2	A	B	C	E	F	G	H	I	Product key [1.)] (Port 1 – Port 2)
15	8...8	13.5	1.6	13.5	1.6	93.0	20	52.05	20	70	27	17	4.5	SA40-SA40
	10...8	17.2		13.5		93.0		53.9		70	31	18	4.5	SA41-SA40
	10...10	17.2		17.2		93.0		54.9		70	28	16	2.5	SA41-SA41
	15...8	21.3		13.5		93.0		57		71	34.5	21	7.5	SA42-SA40
	15...15	21.3		21.3		93.0		56		71	35	21	6.5	SA42-SA42
	20...8	26.9		13.5		103.0	25	59.8		76	41	25	11.5	SA43-SA40
	20...10	26.9		17.2		103.0		59.8		78	42	25	11.5	SA43-SA41
	20...15	26.9		21.3		103.0		59.8		78	42	25	11.5	SA43-SA42
	25...10	33.7	2.0	17.2		103.0		63		83	48	28	14.5	SA44-SA41
	25...15	33.7		21.3		103.0		62.8		83	47	28	14.5	SA44-SA42
	32...8	42.4		13.5		103.0		67.1		91	56	32	18.5	SA45-SA40
	32...10	42.4		17.2		103.0		67.1		91	56	32	18.5	SA45-SA41
	32...15	42.4		21.3		103.0		67.1		91	56	32	18.5	SA45-SA42
	40...8	48.3		13.5		103.0		70.1		97	63	35	21.5	SA46-SA40
	40...10	48.3		17.2		103.0		70.1		97	63	35	21.5	SA46-SA41
	40...15	48.3		21.3		103.0		70.1		97	63	35	21.5	SA46-SA42
	50...8	60.3		13.5		113.0	30	76.1		109	72	38	24.5	SA47-SA40
	50...10	60.3		17.2		113.0		76.1		109	72	38	24.5	SA47-SA41
	50...15	60.3		21.3		113.0		76.1		109	72	38	24.5	SA47-SA42
	65...8	76.1		13.5		113.0		84		125	85	44	30.5	SA48-SA40
	65...15	76.1		21.3		113.0		84		125	85	44	30.5	SA48-SA42
	80...8	88.9	2.3	13.5		113.0		90.1		140	99	52	38.5	SA49-SA40
	80...10	88.9		17.2		113.0		90.1		137	94	47	33.5	SA49-SA41
	80...15	88.9		21.3		113.0		90.1		137	94	47	33.5	SA49-SA42
	100...15	114.3		21.3		113.0		102.8		163	120	60	46.5	SA39-SA42
20	20...20	26.9	1.6	26.9	1.6	114.0	25	70.3	25	87	40	24	6.0	SA43-SA43
	25...20	33.7	2.0	26.9		114.0		73.3		94	48	28	10.0	SA44-SA43
	32...20	42.4		26.9		114.0		78.6		102	57	33	15.0	SA45-SA43
	40...20	48.3		26.9		114.0		80.6		108	63	35	17.0	SA46-SA43
	50...20	60.3		26.9		124.0	30	87		120.8	72	39	21.0	SA47-SA43
	65...20	76.1		26.9		124.0		94.5		136	86	45	27.0	SA48-SA43
	80...20	88.9	2.3	26.9		124.0		100.6		148	94	47	29.0	SA49-SA43
	100...20	114.3		26.9		124.0		113.3		173	120	60	42.0	SA39-SA43
25	25...25	33.7	2.0	33.7	2.0	124.5	25	78.6	25	98	53	33	13.0	SA44-SA44
	32...25	42.4		33.7		124.5		82.9		107	62	38	18.0	SA45-SA44
	40...25	48.3		33.7		124.5		85.9		114	69	41	21.0	SA46-SA44
	50...25	60.3		33.7		134.5	30	81.9		125	78	45	25.0	SA47-SA44
	65...25	76.1		33.7		134.5		99.8		142	94	52	32.0	SA48-SA44
	80...25	88.9	2.3	33.7		134.5		105.9		153	101	54	34.0	SA49-SA44
	150...25	168.3	2.6	33.7		134.5		145.3		232	174	87	67.0	SA69-SA44
40	32...32	42.4	2.0	42.4	2.0	152.0	25	98.00	25	122	62	38	9.4	SA45-SA45
	40...32	48.3		42.4		152.0		100		128	68	41	12.4	SA46-SA45
	40...40	48.3		48.3		152.0		100		128	68	41	12.4	SA46-SA46
	50...32	60.3		42.4		162.0	30	106		140	82	48	19.4	SA47-SA45
	50...40	60.3		48.3		162.0		106		140	82	48	19.4	SA47-SA46
	65...40	76.1		48.3		162.0		113.9		155	97	55	26.4	SA48-SA46
	80...32	88.9	2.3	42.4		162.0		120		168	108	60	31.4	SA49-SA45
	80...40	88.9		48.3		162.0		120		168	108	60	31.4	SA49-SA46
	100...32	114.3		42.4		162.0		132.7		193	129	68	39.4	SA39-SA45
	100...40	114.3		48.3		162.0		132.7		193	129	68	39.4	SA39-SA46
50	50...50	60.3	2.0	60.3	2.0	188.0	30	120.2	30	154	82	48	12.5	SA47-SA47
	65...50	76.1		60.3		188.0		128.1		170	100	56	20.5	SA48-SA47
	80...50	88.9	2.3	60.3		188.0		134.2		183	110	61	25.5	SA49-SA47
	100...50	114.3		60.3		188.0		146.9		208	131	70	34.5	SA39-SA47
	150...50	168.3	2.6	60.3		188.0		173.6		261	176	88	52.5	SA69-SA47

DTS 1000450589 EN Version: M Status: RL (released | freigegeben | valide) printed: 08.07.2026

valvesgo.com

Diaphragm size	Port 1 – Port 2 DN	ØD1	s1	ØD2	s2	A	B	C	E	F	G	H	I	Product key [1.)] (Port 1 – Port 2)
65	65 - 65	76.1	2.0	76.1	2.0	210	30	144.4	30	186	97	55	12.9	SA48-SA48
	80 - 65	88.9	2.3	76.1		210		148.7		197	111	63	20.5	SA49-SA48
	100 - 65	114.3		76.1		210		161.4		222	135	74	31.5	SA39-SA48
80	80 - 80	88.9	2.3	88.9	2.3	255	30	163.1	30	212	119	71	20	SA49-SA49
	100 - 80	114.3		88.9		255		177.8		239	144	83	32	SA39-SA49
100	100	114.3	2.3	114.3	2.3	290	30	209.1	30	270	133	72	8.5	SA39-SA39
DIN 11850 - 2 / DIN 11866 series A / DIN EN 10357 series A														
8	10...10	13.0	1.5	13.0	1.5	78.0	20	47.0	20	60	24	15	5.0	SD40-SD40
	20...10	23.0		13.0		88.0	25	52.0		66	36	22	12.0	SD43-SD40
15	15...15	19.0	1.5	19.0	1.5	93.0	20	55.9	20	70	33	20	6.5	SD42-SD42
	20...15	23.0		19.0		103.0		57.9		72	37	22.5	9.0	SD43-SD42
	25...15	29.0		19.0		103.0	25	60.9		78	43	26	12.5	SD44-SD42
	32...15	35.0		19.0		103.0		63.9		84	49	29	15.5	SD45-SD42
	40...15	41.0		19.0		103.0		66.9		91	56	31	17.5	SD46-SD42
	50...15	53.0		19.0		113.0	30	72.9		102	65	36	22.5	SD47-SD42
20	20...20	23.0	1.5	23.0	1.5	114.0	25	68.7	25	85	36	21	–	SD43-SD43
	32...20	35.0		23.0		114.0		74.4		95	50	29	11.0	SD45-SD43
	40...20	41.0		23.0		114.0		77.4		101	56	32	14.0	SD46-SD43
25	25...25	29.0	1.5	29.0	1.5	124.5	25	76.7	25	98	48	30	10.0	SD44-SD44
	40...25	41.0		29.0		124.5		82.7		106	61	38	18.0	SD46-SD44
	50...25	53.0		29.0		134.5	30	88.7		120	73	44	24.0	SD47-SD44
40	32...32	35.0	1.5	35.0	1.5	152.0	25	95.0	25	119	52	32	9.0	SD45-SD45
	40...40	41.0		41.0		152.0		97.3		121	62	37	8.4	SD46-SD46
	50...40	53.0		41.0		162.0	30	102.8		133	75	45	16.4	SD47-SD46
50	50...50	53.0	1.5	53.0	1.5	188.0	30	117.0	30	147	74	44	8.5	SD47-SD47
65	65...65	70.0	2.0	70.0	2.0	210.0	30	142.0	30	179	89	52	14	SD48-SD48
	80...65	85.0		70.0		210.0		149.5		194	104	59.5	21.5	SD49-SD48
	100...65	104.0		70.0		210.0		–		–	–	–	–	SD50-SD48
80	80...80	85.0	2.0	85.0	2.0	255.0	30	45.0	30	208	112	67	22	SD49-SD49
	100...80	104.0		85.0		250.0		172.1		227	132	77	32	SD50-SD49
100	100	104.0	2.0	104.0	2.0	293.0	30	211.5	30	267	125	70	11	SD50-SD50
ASME BPE / DIN 11866 series C														
8	20...8	19.05	1.65	6.35	0.89	88.0	25	49.90	20	61	32	20	10.0	SA93-SA90
	25...10	25.40		9.53		88.0	25	53.00		68	38	23	13.0	SODF-SA91
	40...8	38.10		6.35		88.0	25	59.40		80	49	28	18.0	SODH-SA90
	50...8	50.80		6.35		98.0	30	65.80		93	59	32	22.0	SODI-SA90
	65...8	63.50		6.35		98.0		72.10		106	70	36	26.0	SODJ-SA90
15	15...15	12.70	1.65	12.70	1.65	93.0	20	53.20	20	70	27	13.5	–	SA92-SA92
	20...15	19.05		12.70		103.0		55.80		70	31	18.5	5.0	SA93-SA92
	25...15	25.40		12.70		103.0		59.00		75	40	24	10.5	SODF-SA92
	40...15	38.10		12.70		103.0	25	65.30		88	54	31	17.5	SODH-SA92
	50...15	50.80		12.70		113.0	30	71.70		100	64	35	21.5	SODI-SA92
	65...15	63.50		12.70		113.0		78.00		113	73	38	24.5	SODJ-SA92
	80...15	76.20		12.70		113.0		84.40		125	84	43	29.5	SODK-SA92
20	20...20	19.05	1.65	19.05	1.65	114.0	25	66.30	25	85	36	18	–	SA93-SA93
	25...20	25.40		19.05		114.0		69.20		88	40	24	6.0	SODF-SA93
	40...20	38.10		19.05		114.0		75.80		98	53	31	13.0	SODH-SA93
	50...20	50.80		19.05		124.0	30	82.20		111	66	37	19.0	SODI-SA93
	65...20	63.50		19.05		124.0		88.50		123	75	40	22.0	SODJ-SA93
	80...20	76.20		19.05		124.0		94.90		136	85	44	26.0	SODK-SA93
	100...20	101.60	2.11	19.05		124.0		107.10		161	108	54	36.0	SODL-SA93

DTS 1000450589 EN Version: M Status: RL (released | freigegeben | valide) printed: 08.07.2026

valvesgo.com

valvesgo.com

Diaphragm size	Port 1 – Port 2 DN	ØD1	s1	ØD2	s2	A	B	C	E	F	G	H	I	Product key [1.)] (Port 1 – Port 2)
25	25...25	25.40	1.65	25.40	1.65	124.5	25	74.8	25	95	42	26	6.0	SODF-SODF
	40...25	38.10		25.40		124.5		81.1		103	58	36	16.0	SODH-SODF
	50...25	50.80		25.40		134.5	30	87.5		120	75	44	24.0	SODI-SODF
	65...25	63.50		25.40		134.5		93.8		129	82	47	27.0	SODJ-SODF
	80...25	76.20		25.40		134.5		100.15		142	94	52	32.0	SODK-SODF
40	40...40	38.10	1.65	38.10	1.65	152.0	25	99.60	25	121	58	35	6.4	SODH-SODH
	50...40	50.80		38.10		162.0	30	101.6		131	72	43	14.4	SODI-SODH
	65...40	63.50		38.10		162.0		107.90		143	85	50	21.4	SODJ-SODH
	80...40	76.20		38.10		162.0		114.3		156	98	56	27.4	SODK-SODH
50	50...50	50.80	1.65	50.80	1.65	188.0	30	115.8	30	145	71	42	6.5	SODI-SODI
	65...50	63.50		50.80		188.0		122.10		157	85	50	14.5	SODJ-SODI
	65...65	63.50		63.50		188.0		122.10		158	86	50	14.5	SODJ-SODJ
	80...50	76.20		50.80		188.0		128.5		169	98	56	20.5	SODK-SODI
	100...65	101.60	2.11	63.50		188.0		140.7		195	120	66	30.5	SODL-SODJ
65	65...65	63.50	1.65	63.50	1.65	210.0	30	136.6	30	172	84	49	6.5	SODJ-SODJ
	80...65	76.2		63.50		210.0		145		187	99	57	14.5	SODK-SODJ
	100...65	101.6	2.11	63.50		210.0		155.2		210	120	66	23.5	SODL-SODJ
80	80...80	76.2	1.65	76.2	1.65	255.0	30	157.35	30	199	106	64	6.0	SODK-SODK
	100...80	101.6	2.11	76.2	1.65	255.0		169.6		224	131	77	26.0	SODL-SODK
100	100	101.6	2.11	101.6	2.11	290.0	30	207	30	260	120	67	10.0	SODL-SODL
SMS 3008														
25	25...25	25.0	1.2	25.0	1.2	124.5	25	75.0	25	95	43	27	7.0	SA60-SA60
	40...25	38.0		25.0		124.5		81.5		103	58	36	16.0	SA62-SA60
	50...25	51.0		25.0		134.5	30	88.0		118	72	42	22.0	SA63-SA60
40	40...40	38.0	1.2	38.0	1.2	152.0	25	95.6	25	121	58	35	6.4	SA62-SA62
	50...40	51.0		38.0		162.0	30	102.1		131	73	44	15.4	SA63-SA62
50	50...50	51.0	1.2	51.0	1.2	188.0	30	120.2	30	154	82	48	2.5	SA63-SA63
DIN 11850 series 0														
8	04...04	6.0	1.0	6.0	1.0	78.0	20	44.0	20	60	15	6.5	0.0	SC40-SC40
	06...06	8.0		8.0		75.0	17.5	46.5		60	13	7	0.0	SC41-SC41
	40...04	40.0	1.5	6.0		88.0	25	60.5		83	51	29	19.0	SC47-SC40
	40...8	40.0		10.0		88.0		60.5		83	51	29	19.0	SC47-SC42
	50...04	52.0		6.0		98.0	30	66.5		95	60	32	22.0	SC48-SC40
15	50...15	52.0	1.5	18.0	1.5	113.0	30	72.4	20	101	65	36	22.5	SC48-SC43
25	25...25	28.0	1.5	28.0	1.5	124.5	25	76.2	25	95	46	29	9.0	SC45-SC45
	50...25	52.0		28.0		134.5	30	91.2		120	71	42	22.0	SC48-SC45
40	25...32	28.0	1.5	34.0	1.5	152.0	25	90.3	25	122	58	32	3.4	SC45-SC46
	50...32	52.0		34.0		162.0	30	102.3		132	75	45	16.4	SC48-SC46
50	50...50	52.0	1.5	52.0	1.5	188.0	30	116.5	30	147	73	43	7.5	SC48-SC48
65	65...65	70.0	2.0	70.0	2.0	210.0	30	142.0	30	179	89	52	14.0	SD48-SD48
	80...65	85.0		70.0		210.0		149.5		194	104	59.5	21.5	SD49-SD48
	100...65	104.0		70.0		210.0		–		–	–	–	–	SD50-SD48
80	80...80	85.0	2.0	85.0	2.0	255.0	30	45.0	30	208	112	67	22.0	SD49-SD49
	100...80	104.0		85.0		250.0		172.1		227	132	77	32.0	SD50-SD49
100	100	104.0	2.0	104.0	2.0	293.0	30	211.5	30	267	125	70	11.0	SD50-SD50

1.) This information is part of the product key (see "9.3. Bürkert Product Enquiry Form" on page 19).

DTS 1000450589 EN Version: M Status: RL (released | freigegeben | valide) printed: 08.07.2026

valvesgo.com

5.3. T-Body with clamp connection

Note:

- Dimensions in mm, unless otherwise stated
- The clamp dimensions must be added to the welded connection dimensions.

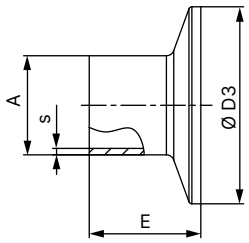

Port connection [mm]	[inch]	A	s	D3	E	Product key [1.)]
DIN 32676 series A (DIN pipe)						
10	–	13	1.5	34	18	TD41
15	–	19	1.5	34	18	TD42
20	–	23	1.5	34	18	TD43
25	–	29	1.5	50.5	21.5	TD44
32	–	35	1.5	50.5	21.5	TD45
40	–	41	1.5	50.5	21.5	TD46
50	–	53	1.5	64	21.5	TD47
65	–	70	2	91	28	TD48
80	–	85	2	106	28	TD49
100	–	104	2	119	28	TD50
DIN 32676 series B (ISO pipe)						
8	–	13.5	1.6	25	28.6	TC40
8	–	13.5	1.6	34 [2.)]	28.6	TC51 [2.)]
10	–	17.2	1.6	34 [2.)]	28.6	TC41 [2.)]
15	–	21.3	1.6	34 [2.)]	28.6	TC42 [2.)]
15	–	21.3	1.6	50.5	28.6	TC52
20	–	26.9	1.6	50.5	28.6	TC43
25	–	33.7	2	50.5	28.6	TC44
32	–	42.4	2	50.5 [2.)]	28.6	TC45 [2.)]
40	–	48.3	2	64	28.6	TC46
50	–	60.3	2	77.5	28.6	TC47
65	–	76.1	2	91	28.6	TC48
80	–	88.9	2.3	106	28.6	TC49
100	–	114.3	2.3	130	28.6	TC50
ASME BPE						
8	¼	6.35	0.89	25	28.6	TG50
10	⅜	9.53	0.89	25	28.6	TG01
15	½	12.7	1.65	25	28.6	TG02
20	¾	19.05	1.65	25	28.6	TG03
25	1	25.4	1.65	50.5	28.6	TG04
40	1½	38.1	1.65	50.5	28.6	TG05
50	2	50.8	1.65	64	28.6	TG06
65	2½	63.5	1.65	77.5	28.6	TG07
80	3	76.2	1.65	91	28.6	TG08
100	4	101.6	2.11	119	28.6	TG09

1.) This information is part of the product key (see "9.3. Bürkert Product Enquiry Form" on page 19).
2.) Deviating from standard because of a different outer clamp diameter

DTS 1000450589 EN Version: M Status: RL (released | freigegeben | valide) printed: 08.07.2026

valvesgo.com

6. Performance specifications

6.1. Medium pressure

Information for control function A

Note:

- For low operating pressures, optional variants with reduced spring force (EC04) are recommended.
- Pressure data [bar]: Overpressure to atmospheric pressure. Static: When closed, the valve is pressurised on one side with the maximum operating pressure.
- Information for control function B and I is available on request.

Diaphragm size	Actuator size Ø	Pilot pressure	Maximum static operating pressure for seal materials	
			EPDM, FKM	PTFE/EPDM, advanced PTFE/EPDM, laminate of GYLON® and EPDM
	[mm]	[bar]	[bar]	[bar]
8	40 (C)	5.0...7	10	10
15	50 (D)	5.0...7	10	–
	63 (E)	5.0...7	10	10
20	63 (E)	5.5...7	10	10
	80 (F)	5.0...7	10	10
25	80 (F)	5.5...7	10	10
40	100 (G)	5.5...7	10	9 1.)
	125 (H)	5.5...7	10	10
50	125 (H)	5.5...7	10	10
65	175 (K)	5.0...6	10	6
80	175 (K)	5.0...6	7	4 2.)
	225 (L)	5.0...6	10	10
100	225 (L)	5.0...6	10	7

1.) The maximum operating pressure for laminate of GYLON® and EPDM (ER diaphragm) is 6 bar.
2.) The tightness value only applies to laminate of GYLON® and EPDM (ER diaphragm), otherwise 0 bar for PTFE/EPDM and advanced PTFE/EPDM (EA and EU diaphragms).

DTS 1000450589 EN Version: M Status: RL (released | freigegeben | valide) printed: 08.07.2026

valvesgo.com

valvesgo.com

7. Product accessories

Electric position feedback indicator	
Type 8697 ▸ Actuator size Ø 40...225 mm	
	The position feedback Type 8697 is designed for integrated mounting on CLASSIC series 20XX process valves, suiting the requirements of hygienic process environments. Mechanical or inductive limit switches register the position of the valve. **Features** • Compact design • LED position indicator • Mechanical or inductive limit switches for end position registering • Easy-to-clean clean chemically resistant housing featuring IP65/IP67, 4X Rating • Optionally intrinsically safe variant according to IECEx **Customer benefits** • Easy and quick installation • High level of signal reliability thanks to self-adjusting limit switches • Minimised space requirement in the plant piping for more flexibility in plant design

valvesgo.com

DTS 1000450589 EN Version: M Status: RL (released | freigegeben | valide) printed: 08.07.2026

valvesgo.com

8. Networking and combination with other Bürkert products

Note:
The **on/off CLASSIC valve system Type 8801-TA** consists of **diaphragm valve Type 2032** and a **position feedback, Type 8697**.

You order two components and receive a completely assembled and tested valve.

Example:

Diaphragm valve

Typ 2032

Position feedback

Type 8697
Pneumatic control for decentralised automation of ELEMENT process valves

Valve system on/off CLASSIC

Valve system
Type 8801-TA-U

valvesgo.com

DTS 1000450589 EN Version: M Status: RL (released | freigegeben | valide) printed: 08.07.2026

valvesgo.com

9. Ordering information

9.1. Bürkert eShop

Bürkert eShop – Easy ordering and quick delivery

You want to find your desired Bürkert product or spare part quickly and order directly? Our online shop is available for you 24/7. Sign up and enjoy all the benefits.

Order online now

9.2. Bürkert product filter

Bürkert product filter – Get quickly to the right product

You want to select products comfortably based on your technical requirements?
Use the Bürkert product filter and find suitable articles for your application quickly and easily.

Try out our product filter

9.3. Bürkert Product Enquiry Form

Note:
Please see our Product Enquiry Form for a full explanation of our specification key.

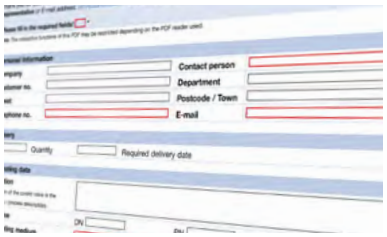

Bürkert Product Enquiry Form – Your enquiry quickly and compactly

Would you like to make a specific product enquiry based on your technical requirements? Use our Product Enquiry Form for this purpose. There you will find all the relevant information for your Bürkert contact. This will enable us to provide you with the best possible advice.

Fill out the form now

DTS 1000450589 EN Version: M Status: RL (released | freigegeben | valide) printed: 08.07.2026

valvesgo.com