bürkert
FLUID CONTROL SYSTEMS

2/2-way diaphragm valve with pneumatic plastic actuator

- Valve body and diaphragm are available in different materials and variants
- Media-wetted surfaces in Ra ≤ 0.38 µm...1.6 µm (optionally electropolished)
- Available in all common connection sizes and variants

Product variants described in the data sheet may differ from the product presentation and description.

Can be combined with

Type SV02
Diaphragms

Type 2034
Multifunction block solutions

Type 2933
2/2-way diaphragm valve with manually operated actuator (basic)

Type 2036
Robolux multiway diaphragm valve, pneumatically operated

Type 8690
Pneumatic control unit for decentralised automation of process valves ELEMENT

Type 8697
Pneumatic control unit for decentralised automation of process valves ELEMENT

Type 8098
FLOWave SAW flowmeter

Type description

The externally controlled diaphragm valve Type 2030/2031 consists of a pneumatically operated piston actuator, a diaphragm and a 2-way valve body. The proven and robust actuator with plastic valve body ensures reliable operation in hygienic or aggressive environments. The flow-optimised valve body with minimal dead space enables high volume flow rates and a wide range of possible applications. The valve body and the diaphragms are available in all common materials and versions. The actuator has a compact, autoclavable design (PPS variant). The integration of automation units 8690/8697 is possible at all levels of expansion (can be retrofitted). An explosion-proof ATEX/IECEx device variant is available.

The diaphragm bonnet is available in either plastic or stainless steel. The actuator is equipped with an integrated, optical position indicator as standard, optionally a min./max. stroke limiter can be installed.

DTS 1000450587 EN Version: S Status: RL (released | freigegeben | valide) printed: 24.06.2026

© Christian Bürkert GmbH & Co. KG, Subject to alteration

valvesgo.com

Table of contents

1. General technical data 3

2. Control functions 5

3. Approvals and conformities 6

3.1. General notes 6
3.2. Conformity 6
3.3. Standards 6
3.4. Explosion protection 6
3.5. Foods and beverages/Hygiene 6
3.6. Others 7

4. Materials 7

4.1. Bürkert resistApp 7
4.2. Pressure temperature diagram for plastic valve body 7
4.3. Material specifications 8
4.4. Example of available diaphragm materials 9

5. Dimensions 10

5.1. Actuator 10
CLASSIC actuator 10
CLASSIC actuator with interface for block mounting (MT85) 11
CLASSIC actuator with control unit Type 8697 12
5.2. Forged steel valve body (VS) with welded connection 13
5.3. Forged steel valve body (VS) with clamp connection 15
5.4. Tube valve body (VP) with welded connection 17
5.5. Tube valve body (VP) with clamp connection 18
5.6. Tube valve body (VP) with threaded connection 19
5.7. Tube valve body (VP) with flange connection 20
5.8. Cast valve body (VG) with welded connection 21
5.9. Cast valve body (VG) with clamp connection 23
5.10. Plastic valve body (PV, PP, PD) with spigot connection 24
5.11. Plastic valve body (PW, PV, PP, PD) with true union 26
5.12. Plastic valve body (PV, PP, PD) with flange connection 29

6. Performance specifications 31

6.1. Flow rate characteristics 31
Forged steel valve body (VS), block body (VI) 31
Tube valve body (VP) 32
Cast valve body (VG) 32
Plastic valve body (PW, PV, PP, PD) 33
6.2. Medium pressure 34

7. Product accessories 35

8. Networking and combination with other Bürkert products 36

9. Ordering information 37

9.1. Bürkert eShop 37
9.2. Bürkert product filter 37
9.3. Bürkert Product Enquiry Form 37

DTS 1000450587 EN Version: S Status: RL (released | freigegeben | valide) printed: 24.06.2026

valvesgo.com

valvesgo.com

1. General technical data

Product properties	
Dimensions	Further information can be found in chapter "5. Dimensions" on page 10.
Material [1.)]	
Forged steel valve body (VS) [1.)]	Forged stainless steel 1.4435 in accordance with BN2 DIN EN 1022 - 5, F316L in accordance with to ASTM, A182/A182M and 316L in accordance with to ASME BPE
Block body (VI) [1.)]	Stainless steel block material 1.4435 according to DIN EN 10088 and 316L according to ASME BPE (Table MM- 2.1.1, Ed. 2024) BN2 available on request
Tube valve body (VP) [1.)]	Stainless steel tube 1.4435-BN2 / UNS S31603 (316L) according to DIN 11866, ASTM A269 / A270, DIN EN 10217 - 7 / 10216 - 5
Cast valve body (VG) [1.)]	Stainless steel precision casting 1.4435 / 316L
Plastic valve body (PW, PV, PP, PD) [1.)]	PVC-C, PVC-U, PP, PVDF
Diaphragm	EPDM (AD) [1.)], PTFE/EPDM (EA) [1.)], Advanced PTFE/EPDM (EU) [1.)], laminate of GYLON® and EPDM (ER) [1.)]
Actuator	PPS, PA
Diaphragm size	6...100, for tube valve body 8...80, for plastic body 15...100
Standard surface quality	
Forged steel valve body (VS) [1.)]	Internally electrically polished: Ra ≤ 0.38 µm (NO17) [1.)] (ASME BPE SF4 / DIN HE4) (externally forged surface, electrically polished) Internally mechanically polished: Ra ≤ 0.5 µm (NO14) [1.)] (ASME BPE SF1) (externally forged surface)
Block body (VI) [1.)]	Internally electrically polished: Ra ≤ 0.38 µm (NO17) [1.)] (ASME BPE SF4 / DIN HE4) (externally Ra ≤ 1.6 µm) Internally mechanically polished: Ra ≤ 0.5 µm (NO14) [1.)] (ASME BPE SF1) (externally Ra ≤ 1.6 µm)
Tube valve body (VP) [1.)]	Internally electrically polished: Ra ≤ 0.38 µm (NO17) [1.)] (ASME BPE SF4 / DIN HE4) (externally electrically polished) Internally glass bead blasted: Ra ≤ 1.6 µm (NO05) [1.)] (externally glass bead blasted (NO01) [1.)])
Cast valve body (VG) [1.)]	Internally electrically polished: Ra ≤ 0.6 µm (NO16) [1.)] (ASME BPE SF6) (externally cast surface, electrically polished) Internally mechanically polished: Ra ≤ 0.76 µm (NO06) [1.)] (ASME BPE SF3 / DIN H2) (externally cast surface)
Performance data	
Maximum pilot pressure (CF A)	7 bar (for actuator size 40 [1.)]...125 [1.)]/PPS) 6 bar (for actuator size 175 [1.)] and 225 [1.)]/PA) See "6.2. Medium pressure" on page 34
Pilot air port	Thread G ¼, thread G ⅛ for actuator size 40 and 50
Medium data	
Operating medium	Neutral gases and liquids, highly purified, sterile, aggressive or abrasive mediums (see **resistance chart** ▶)
Medium temperature [6.)]	
Actuator made of PA	Max. 100 °C
EPDM (AD) [1.)]	- 10 °C...+ 143 °C (steam sterilisation + 150 °C for 60 min)
PTFE/EPDM (EA) [1.)]	- 10 °C...+ 130 °C (steam sterilisation + 140 °C for 60 min)
Advanced PTFE/EPDM (EU) [1.)]	- 5 °C...+ 143 °C (steam sterilisation + 150 °C for 60 min)
Laminate of GYLON® and EPDM (ER) [1.)]	- 5 °C...+ 130 °C (steam sterilisation + 140 °C for 60 min)
Plastic body	See "4.2. Pressure temperature diagram for plastic valve body" on page 7
Control medium	Neutral gases, air

DTS 1000450587 EN Version: S Status: RL (released | freigegeben | valide) printed: 24.06.2026

valvesgo.com

Product connections	
Port connection [2.)]	
Nominal diameter	DN 06...DN 100 (⅛"...4")
Stainless steel body [3.)]	
Welded connection [2.)]	DIN EN ISO 1127 / ISO 4200 / DIN 11866 series B DIN 11850 - 2 / DIN 11866 series A / DIN EN 10357 series A ASME BPE / DIN 11866 series C
Clamp connection [2.)]	DIN 32676 series A (DIN pipe) DIN 32676 series B (ISO pipe) ASME BPE
Plastic body	
Spigot connection	DN 15...DN 50
True union	DN 15...DN 50
Loose flange	DN 15...DN 65
Fixed flange	DN 80...DN 100
Environment and installation	
Installation position	See **operating manual Type 2031** ▸
Ambient temperature [4.)]	
PPS, actuator size ≤ 80 mm	+ 5 °C...+ 140 °C [5.)]
PPS, actuator size 100 mm, 125 mm	+ 5 °C...+ 90 °C (short-term up to + 140 °C) [5.)]
PA, actuator size ≤ 125 mm	- 10 °C...+ 60 °C [5.)]
PA, actuator size ≥ 175 mm	- 10 °C...+ 50 °C [5.)]

1.) This information is part of the product key (see "9.3. Bürkert Product Enquiry Form" on page 37).
2.) Further variants are available on request.
3.) Tube valve body (VP) also available with flange and threaded connections
4.) With plastic housings, a temperature limitation due to housing material is possible.
5.) For standard variant
6.) The component (actuator, diaphragm or housing) with the lowest maximum permissible temperature defines the maximum permissible temperature for the medium and environment.

DTS 1000450587 EN Version: S Status: RL (released | freigegeben | valide) printed: 24.06.2026

valvesgo.com

valvesgo.com

2. Control functions

Symbol	Description
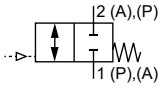	**Control function A (CF A)** Pneumatically operated 2/2-way on/off valve Bidirectional Normally closed by spring force
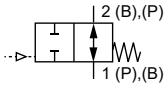	**Control function B (CF B)** Pneumatically operated 2/2-way on/off valve Bidirectional Normally opened by spring force
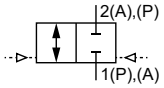	**Control function I (CF I)** Pneumatically operated 2/2-way on/off valve on either side Bidirectional Switching position dependent on external control

DTS 1000450587 EN Version: S Status: RL (released | freigegeben | valide) printed: 24.06.2026

valvesgo.com

valvesgo.com

3. Approvals and conformities

3.1. General notes

- The approvals and conformities listed below must be stated when making enquiries. This is the only way to ensure that the product complies with all required specifications.
- Not all available variants can be supplied with the below mentioned approvals or conformities.

3.2. Conformity

In accordance with the Declaration of Conformity, the product is compliant with the EU Directives.

3.3. Standards

The applied standards which are used to demonstrate compliance with the EU Directives are listed in the EU-Type Examination Certificate and/or the EU Declaration of Conformity.

3.4. Explosion protection

Approval	Description
	Optional: Explosion protection (valid for the variable code PX51) As a category 2 device suitable for zone 1/21 and zone 2/22. **ATEX:** EPS 18 ATEX 2 008 X II 2G Ex h IIC T4...T2 Gb II 2D Ex h IIIC T135 °C...T300 °C Db **IECEx:** IECEx EPS 18.0007X Ex h IIC T4...T2 Gb Ex h IIIC T135 °C...T300 °C Db

Temperature class	T2	T3	T4
Maximum surface temperature	+ 300 °C	+ 200 °C	+ 135 °C
Ambient temperature	- 40...+ 130 °C	- 40...+ 130 °C	- 40...+ 100 °C
Maximum medium temperature	+ 285 °C	+ 185 °C	+ 125 °C

Note: The ambient and medium temperature range may be limited by non-ex-relevant specifications. Observe the Operating Instructions.

3.5. Foods and beverages/Hygiene

Conformity	Description
	3-A Sanitary Standards Inc. (valid for the variable code PE05) The products comply with 3-A Sanitary Standards Inc (3-A SSI) as per certificate.
FDA	**FDA – Code of Federal Regulations** The diaphragms made of EPDM (AD), PTFE/EPDM (EA), Advanced PTFE/EPDM (EU) and laminate of GYLON® and EPDM (ER) comply with the Code of Federal Regulations published by the FDA (Food and Drug Administration, USA).
USP	**United States Pharmacopeial Convention (USP)** The diaphragms made of EPDM (AD), PTFE/EPDM (EA), Advanced PTFE/EPDM (EU) and laminate of GYLON® and EPDM (ER) are tested according to USP Class VI.
	EC Regulation 1935/2004 of the European Parliament and of the Council The diaphragms made of EPDM (AD), PTFE/EPDM (EA), Advanced PTFE/EPDM (EU) and laminate of GYLON® and EPDM (ER) are suitable for use with food and beverages (according to EC Regulation 1935/2004/EC).

DTS 1000450587 EN Version: S Status: RL (released | freigegeben | valide) printed: 24.06.2026

valvesgo.com

3.6. Others

Conformity	Description
TA Luft	Technical instruction on air quality control (valid for the variable code PM01)

4. Materials

4.1. Bürkert resistApp

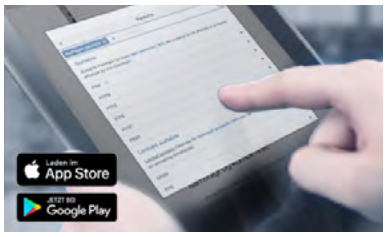

Bürkert resistApp – Chemical resistance chart

You want to ensure the reliability and durability of the materials in your individual application case? Verify your combination of media and materials on our website or in our resistApp.

Start chemical resistance check

4.2. Pressure temperature diagram for plastic valve body

Note:
This information is important for material selection. Observe the permissible operating pressure depending on the medium temperature.

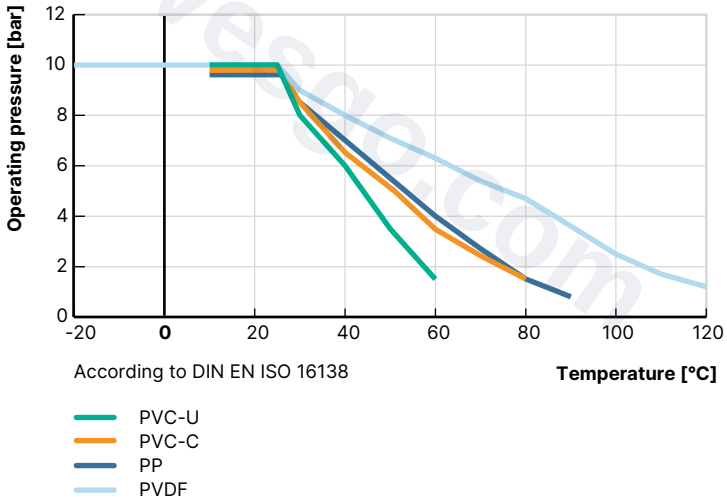

DTS 1000450587 EN Version: S Status: RL (released | freigegeben | valide) printed: 24.06.2026

valvesgo.com

4.3. Material specifications

Actuator size 40...125

Note:
The exemplary representation may differ from the actual product.

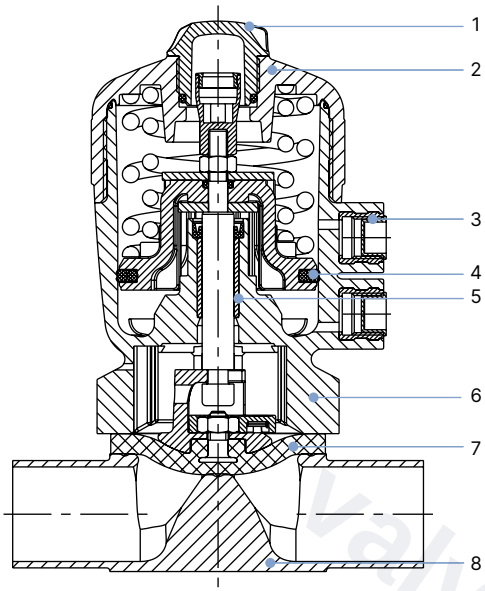

No.	Element	Material
1	Transparent cap	Polysulfone PSU
2	Cover	Polyphenylene sulphide PPS (standard) Polyamide PA (on request)
3	Pilot air ports	Stainless steel 1.4305
4	Piston seal	FKM
5	Socket	Sinter metal
6	Interface	Polyphenylene sulphide PPS (Standard) Polyamide PA (on request) Stainless steel 1.4404 (on request)
7	Diaphragm	EPDM (AD), PTFE/EPDM (EA), Advanced PTFE/EPDM (EU), laminate of GYLON® and EPDM (ER)
8	Valve body	See "1. General technical data" on page 3

Actuator size 175 and 225

Note:
The exemplary representation may differ from the actual product.

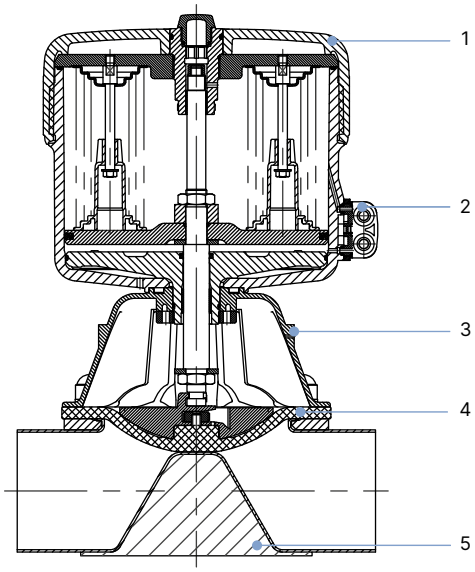

No.	Element	Material
1	Cover	Polyamide PA
2	Pilot air ports	Stainless steel 1.4305
3	Diaphragm bonnet	Stainless steel 1.4308
4	Diaphragm	EPDM (AD), PTFE/EPDM (EA), Advanced PTFE/EPDM (EU), laminate of GYLON® and EPDM (ER)
5	Valve body	See "1. General technical data" on page 3

DTS 1000450587 EN Version: S Status: RL (released | freigegeben | valide) printed: 24.06.2026

valvesgo.com

valvesgo.com

4.4. Example of available diaphragm materials

The diaphragms have been developed to meet the unique challenges of hygienic and sterile requirements. Bürkert offers diaphragms with precise material composition and high accuracy. Bürkert diaphragms are available in a wide range of materials which have been tested and proven in applications in the food and beverage, biotechnology, pharmaceutical and cosmetics industries. The diaphragms are tested during development and production to ensure reliability under difficult process conditions.

- EPDM (AD)
- PTFE/EPDM (EA)
- Advanced PTFE/EPDM (EU)
- Laminate of GYLON® and EPDM (ER)

Further information can be found in our flyer “Diaphragm competence for hygienic applications” on our **website** ▶.

DTS 1000450587 EN Version: S Status: RL (released | freigegeben | valide) printed: 24.06.2026

valvesgo.com

valvesgo.com

5. Dimensions

5.1. Actuator

CLASSIC actuator

Note:
Dimensions in mm, unless otherwise stated

Diaphragm size 6

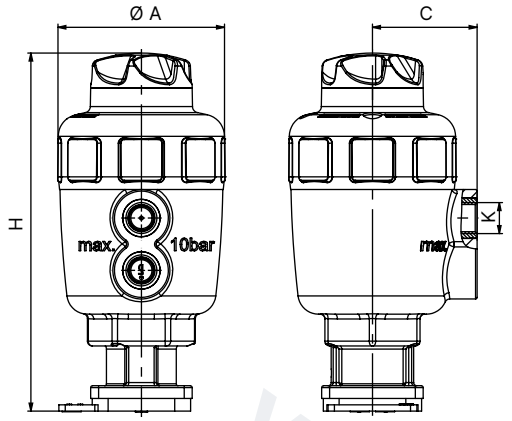

Diaphragm size 8...50

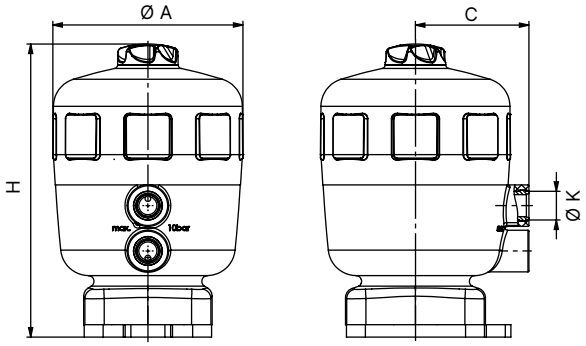

Diaphragm size 65...100

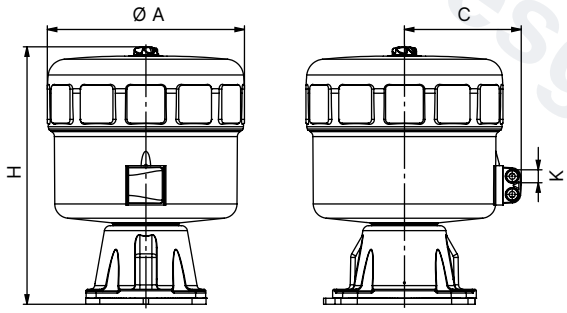

Diaphragm size	Actuator size Ø	Ø A	C	K	H
6	40 (C)	53	34	G ⅛"	113
8	40 (C)	53	34	G ⅛"	89
15	50 (D)	64	39	G ⅛"	108
	63 (E)	80	52	G ¼"	125
20	63 (E)	80	52	G ¼"	131
	80 (F)	101	60	G ¼"	152
25	63 (E)	80	52	G ¼"	136
	80 (F)	101	60	G ¼"	156
40	100 (G)	127	73	G ¼"	205
	125 (H)	158	86	G ¼"	243
50	100 (G)	127	73	G ¼"	207
	125 (H)	158	86	G ¼"	242
65	175 (K)	211	130	G ¼"	350
80	175 (K)	211	130	G ¼"	350
	225 (L)	261	155	G ¼"	345
100	225 (L)	261	155	G ¼"	345

DTS 1000450587 EN Version: S Status: RL (released | freigegeben | valide) printed: 24.06.2026

valvesgo.com

valvesgo.com

CLASSIC actuator with interface for block mounting (MT85)

Note:
Dimensions in mm, unless otherwise stated

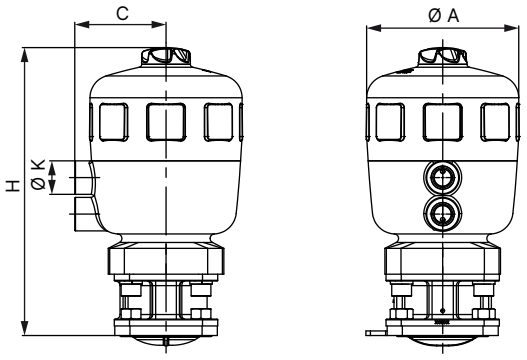

Diaphragm size	Actuator size Ø	H	Ø A	C	K
6 [1.)]	40 (C)	113	53	34	G ⅛"
8	40 (C)	111	53	34	G ⅛"
15	50 (D)	137	64	39	G ⅛"
	63 (E)	154	80	52	G ¼"
20	63 (E)	165	80	52	G ¼"
	80 (F)	186	101	52	G ¼"
25	63 (E)	170	80	52	G ¼"
	80 (F)	190	101	60	G ¼"
40	100 (G)	246	127	73	G ¼"
	125 (H)	284	158	86	G ¼"
50	100 (G)	254	127	73	G ¼"
	125 (H)	288	158	86	G ¼"

1.) Always with a metal interface similar to the MT85 interface (see "CLASSIC actuator" on page 10)

DTS 1000450587 EN Version: S Status: RL (released | freigegeben | valide) printed: 24.06.2026

valvesgo.com

CLASSIC actuator with control unit Type 8697

Note:
Dimensions in mm, unless otherwise stated

CLASSIC actuator with control unit	CLASSIC actuator with control unit (MT85)
Diaphragm size 6...50	Diaphragm size 6...50
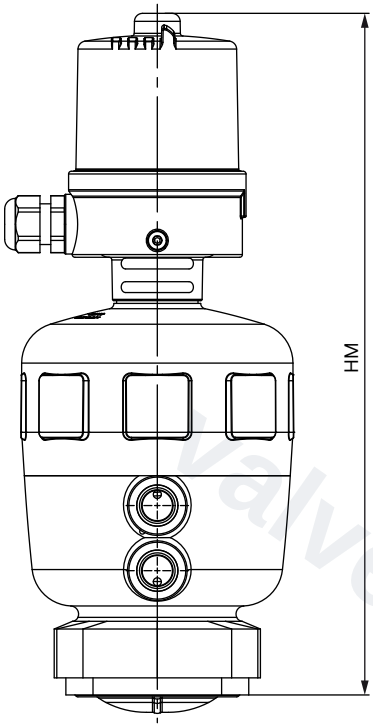	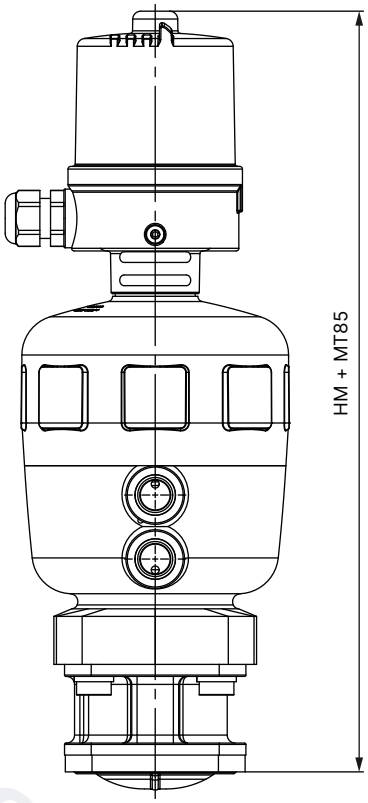

Diaphragm size	Actuator size Ø	HM	HM + MT85
6 [1.)]	40 (C)	209	209
8	40 (C)	185	207
15	50 (D)	204	233
	63 (E)	220	249
20	63 (E)	227	261
	80 (F)	247	281
25	63 (E)	232	266
	80 (F)	252	286
40	100 (G)	298	339
	125 (H)	336	377
50	100 (G)	301	347
	125 (H)	335	381
65	175 (K)	–	437
80	175 (K)	–	446
	225 (L)	–	440
100	225 (L)	–	440

1.) Always with a metal interface similar to the MT85 interface (see "CLASSIC actuator" on page 10)

DTS 1000450587 EN Version: S Status: RL (released | freigegeben | valide) printed: 24.06.2026

valvesgo.com

5.2. Forged steel valve body (VS) with welded connection

Note:

- Dimensions in mm, unless otherwise stated
- Further information on the draining angle can be found in the "Additional manual Type 2xxx 3xxx" on our website (see **operating instructions Type 2031** ▶).

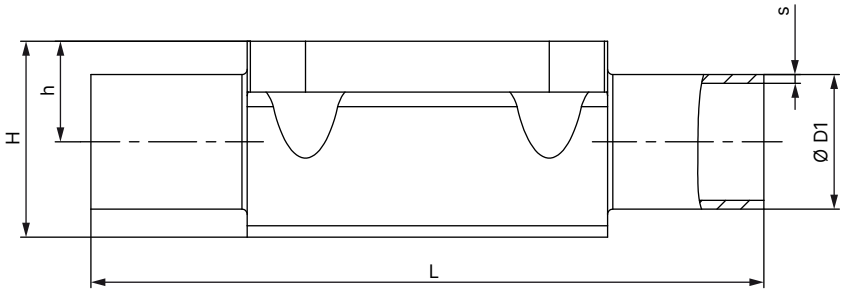

Diaphragm size	Port connection DN	Ø D1	s	L	h	H	Product key [1.)]
DIN EN ISO 1127 / ISO 4200 / DIN 11866 series B							
6 [2.)]	8	13.5	1.6	72	8.5	18.0	SA40
8	8	13.5	1.6	90	9.3	18.8	SA40
15	8	13.5	1.6	108	8.15	19.85	SA40
8	10	17.2	1.6	90	9.3	18.8	SA41
15	10	17.2	1.6	110	12.05	23.75	SA41
15	15	21.3	1.6	110	12.05	23.75	SA42
20	15	21.3	1.6	119	16	30.3	SA42
20	20	26.9	1.6	119	16	30.3	SA43
25	20	26.9	1.6	119	19	37.0	SA43
25	25	33.7	2.0	129	19	37.0	SA44
40	25	33.7	2.0	161	27.6	52.4	SA44
40	32	42.4	2.0	161	27.6	52.4	SA45
40	40	48.3	2.0	161	27.6	52.4	SA46
50	50	60.3	2.0	192	35.5	68.3	SA47
80	65	76.1	2.0	250	51	98.1	SA48
80	80	88.9	2.3	250	51	98.1	SA49
100 [2.)]	100	114.3	2.3	295	63.5	127.0	SA39
DIN 11850 - 2 / DIN 11866 series A / DIN EN 10357 series A							
6 [2.)]	10	13	1.5	72	8.5	18.0	SD40
8	10	13	1.5	90	9.3	18.8	SD40
15	10	13	1.5	110	8.15	19.85	SD40
15	15	19	1.5	110	12.05	23.75	SD42
20	20	23	1.5	119	16.0	30.3	SD43
25	25	29	1.5	129	19.0	37.0	SD44
40	32	35	1.5	161	27.6	52.4	SD45
40	40	41	1.5	161	27.6	52.4	SD46
50	50	53	1.5	192	35.5	68.3	SD47
80	65	70	2.0	250	51.0	98.1	SD48
80	80	85	2.0	250	51.0	98.1	SD49
100 [2.)]	100	104	2.0	295	63.5	127.0	SD50

DTS 1000450587 EN Version: S Status: RL (released | freigegeben | valide) printed: 24.06.2026

valvesgo.com

Diaphragm size	Port connection DN	ØD1	s	L	h	H	Product key [1.)]
ASME BPE / DIN 11866 series C							
6 [2.)]	¼"	6.35	0.89	72	8.5	18.0	SA90
6 [2.)]	⅜"	9.53	0.89	72	8.5	18.0	SA91
6 [2.)]	½"	12.7	1.65	72	8.5	18.0	SA92
8	¼"	6.35	0.89	78	5.7	15.2	SA90
8	⅜"	9.53	0.89	89	5.7	15.2	SA91
8	½"	12.7	1.65	89	9.3	18.8	SA92
15	½"	12.7	1.65	108	8.15	19.85	SA92
15	¾"	19.05	1.65	108	12.05	23.75	SA93
20	¾"	19.05	1.65	117	16.0	30.3	SA93
25	1"	25.4	1.65	127	19.0	37.0	SODF
40	1½"	38.1	1.65	159	27.6	52.4	SODH
50	2"	50.8	1.65	190	35.5	68.3	SODI
50	2½"	63.5	1.65	192	35.5	68.6	SODJ
80	2½"	63.5	1.65	250	51.0	98.1	SODJ
80	3"	76.2	1.65	250	51.0	98.1	SODK
100 [2.)]	4"	101.6	2.11	295	63.5	127.0	SODL
BS 4825							
8	8	6.35	1.20	78	5.7	15.2	SODB
8	10	9.53	1.20	89	5.7	15.2	SODC
15	15	12.7	1.20	108	8.15	19.85	SODD
20	20	19.05	1.20	117	16.0	30.3	SODE
25	25	25.4	1.65	127	19.0	37.0	SODF
40	40	38.1	1.65	159	27.6	52.4	SODH
50	50	50.8	1.65	190	35.5	68.3	SODI
50	65	63.5	1.65	192	35.5	68.6	SODJ
80	80	63.5	1.65	250	51.0	98.1	SODJ
80	80	76.2	1.65	250	51.0	98.1	SODK
SMS 3008							
25	25	25	1.2	129	19	37.0	SA60
40	40	38	1.2	161	27.6	52.4	SA62
50	50	51	1.2	192	35.5	68.3	SA63
100 [2.)]	100	101.6	2	295	63.5	127.0	SA66
DIN 11850 series 0							
8	6	8	1.0	90	5.7	15.2	SC41
8	8	10	1.0	90	5.7	15.2	SC42

1.) This information is part of the product key (see "9.3. Bürkert Product Enquiry Form" on page 37).
2.) Only available as block material

DTS 1000450587 EN Version: S Status: RL (released | freigegeben | valide) printed: 24.06.2026

valvesgo.com

valvesgo.com

5.3. Forged steel valve body (VS) with clamp connection

Note:

- Dimensions in mm, unless otherwise stated
- Further information on the draining angle can be found in the "Additional manual Type 2xxx 3xxx" on our website (see **operating instructions Type 2031** ▶).

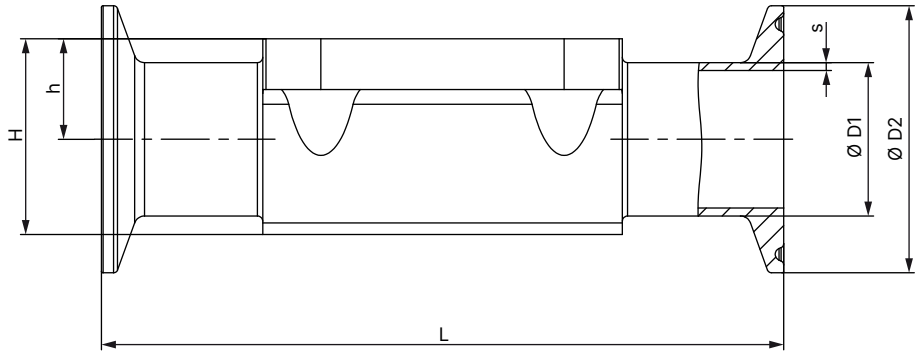

Diaphragm size	Port connection DN	Ø D1	s	Ø D2	L	h	H	Product key [1.)]	Variable code [1.)]
DIN 32676 series B (ISO pipe)									
6 [2.)]	15	13.5	1.6	25.0	63.5	8.5	18.0	TC40	–
15	15	21.3	1.6	50.5	167	12.05	23.75	TC52	–
20	20	26.9	1.6	50.5	114	16.0	30.3	TC43	–
25	25	33.7	2	50.5	129	19.0	37.0	TC44	–
40	40	48.3	2	64.0	161	27.6	52.4	TC46	–
50	50	60.3	2	77.5	190	35.5	68.3	TC47	–
65	65	76.1	2	91.0	190	35.5	63.3	TC48	–
80	80	88.9	2.3	106.0	222	51.0	98.1	TC49	–
100 [2.)]	100	114.3	2.3	130.0	350	63.5	127.0	TC50	–
DIN 32676 series A (DIN pipe)									
6 [2.)]	15	10	1	25.0	63.5	8.5	18.0	TD40	–
8	10	13	1.5	34.0	126	9.3	18.8	TD41	–
15	10	13	1.5	34.0	110	8.15	19.85	TD41	–
15	15	19	1.5	34.0	110	12.05	23.75	TD42	–
20	20	23	1.5	34.0	119	16.0	30.3	TD43	–
25	25	29	1.5	50.5	129	19.0	37.0	TD44	–
40	40	41	1.5	50.5	161	27.6	52.4	TD46	–
50	50	53	1.5	64.0	192	35.5	68.3	TD47	–
65	65	70	2	91.0	248	43.0	83.5	TC48	–
80	80	70	2	91.0	222	51.0	98.1	TC49	–

DTS 1000450587 EN Version: S Status: RL (released | freigegeben | valide) printed: 24.06.2026

valvesgo.com

Diaphragm size	Port connection DN	Ø D1	s	Ø D2	L	h	H	Product key [1.)]	Variable code [1.)]
ASME BPE									
6 [2.)]	¼"	6.35	0.89	25.0	63.5	8.5	18.0	TG50	–
6 [2.)]	⅜"	9.53	0.89	25.0	63.5	8.5	18.0	TG01	–
6 [2.)]	½"	12.7	1.65	25.0	63.5	8.5	18.0	TG02	–
8	¼"	6.35	0.89	25.0	64.5	5.7	15.2	TG50	–
8	⅜"	9.53	0.89	25.0	89	5.7	15.2	TG01	AF34
8	½"	12.7	1.65	25.0	64	9.3	18.8	TG02	–
8	½"	12.7	1.65	25.0	89	9.3	18.8	TG02	AF34
15	½"	12.7	1.65	25.0	89	8.15	19.85	TG02	–
15	½"	12.7	1.65	25.0	108	8.15	19.85	TG02	AF34
15	¾"	19.05	1.65	25.0	89	12.05	23.75	TG03	–
20	¾"	19.05	1.65	25.0	102	16	30.3	TG03	–
20	¾"	19.05	1.65	25.0	117	16	30.3	TG03	AF34
25	1"	25.4	1.65	50.5	114	19	37.0	TG04	–
25	1"	25.4	1.65	50.5	127	19	37.0	TG04	AF34
40	1½"	38.1	1.65	50.5	140	27.6	52.4	TG05	–
40	1½"	38.1	1.65	50.5	159	27.6	52.4	TG05	AF34
50	2"	50.8	1.65	64.0	159	35.5	68.3	TG06	–
50	2"	50.8	1.65	64.0	190	35.5	68.3	TG06	AF34
65	2½"	63.5	1.65	77.5	249	43	83.5	TG07	–
80	2½"	63.5	1.65	77.5	216	51	98.1	TG07	–
80	3"	76.2	1.65	91.0	222	51	98.1	TG08	–
100 [2.)]	4"	101.6	2.11	119.0	306	63.5	127.0	TG09	–

1.) This information is part of the product key (see "9.3. Bürkert Product Enquiry Form" on page 37).
2.) Only available as block material

DTS 1000450587 EN Version: S Status: RL (released | freigegeben | valide) printed: 24.06.2026

valvesgo.com

valvesgo.com

5.4. Tube valve body (VP) with welded connection

Note:

- Dimensions in mm, unless otherwise stated
- Further information on the draining angle can be found in the "Additional manual Type 2xxx 3xxx" on our website (see **operating instructions Type 2031** ▶).

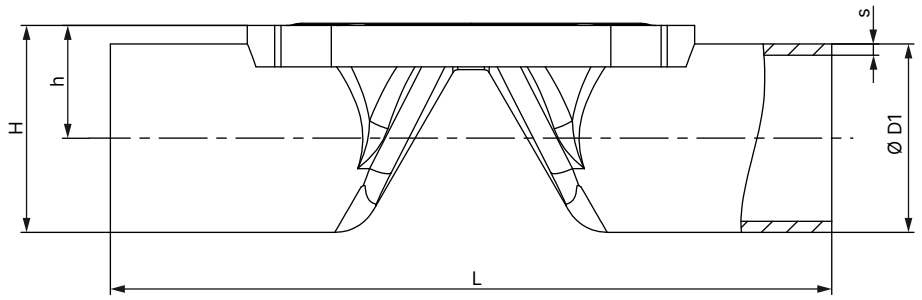

Diaphragm size	Port connection DN	Ø D1	s	L	h	H	Product key [1.)]
DIN EN ISO 1127 / ISO 4200 / DIN 11866 series B							
8	8	13.5	1.6	90	9.85	16.60	SA40
8	10	17.2	1.6	90	11.70	20.30	SA41
15	15	21.3	1.6	110	14.35	25.00	SA42
20	20	26.9	1.6	119	17.15	30.45	SA43
25	25	33.7	2.0	129	20.55	37.40	SA44
32	32	42.4	2.0	148	25.10	46.30	SA45
40	40	48.3	2.0	161	29.35	53.50	SA46
50	50	60.3	2.0	192	35.35	65.50	SA47
DIN 11850 - 2 / DIN 11866 series A / DIN EN 10357 series A							
8	10	13	1.5	90	9.85	16.35	SD40
15	15	19	1.5	110	13.20	22.70	SD42
15	20	23	1.5	119	15.20	26.70	SD43
20	25	29	1.5	129	18.20	32.70	SD44
25	32	35	1.5	148	21.20	38.70	SD45
32	40	41	1.5	161	24.40	44.90	SD46
40	50	53	1.5	192	31.70	58.20	SD47
ASME BPE / DIN 11866 series C							
8	½"	12.7	1.65	90	9.45	21.95	SA92
15	¾"	19.05	1.65	117	13.23	25.73	SA93
20	1"	25.4	1.65	127	16.40	41.65	SODF
32	1½"	38.1	1.65	159	22.95	48.20	SODH
40	2"	50.8	1.65	190	30.60	62.60	SODI
50	2½"	63.5	1.65	192	37.35	69.10	SODJ
65	3"	76.2	1.65	250	46.30	84.40	SODK
80	4"	101.6	2.11	295	60.0	110.80	SODL

1.) This information is part of the product key (see "9.3. Bürkert Product Enquiry Form" on page 37).

DTS 1000450587 EN Version: S Status: RL (released | freigegeben | valide) printed: 24.06.2026

valvesgo.com

5.5. Tube valve body (VP) with clamp connection

Note:

- Dimensions in mm, unless otherwise stated
- Further information on the draining angle can be found in the "Additional manual Type 2xxx 3xxx" on our website (see **operating instructions Type 2031** ▶).

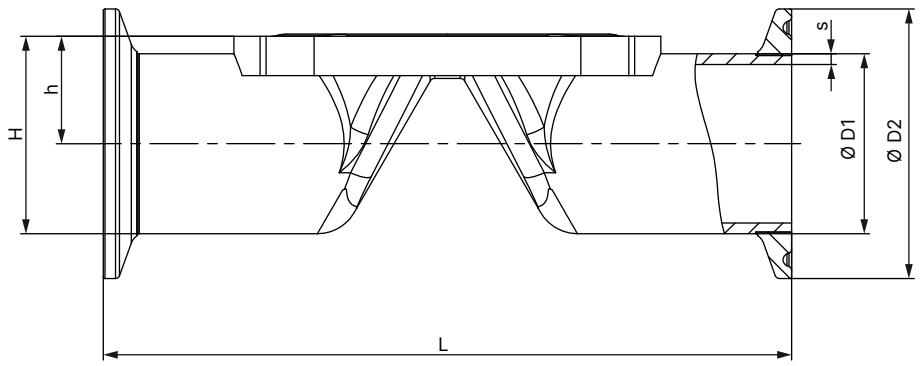

Diaphragm size	Port connection DN	Ø D1	s	Ø D2	L	h	H	Product key [1.)]
DIN 32676 series B (ISO pipe)								
8	8	13.5	1.6	25.0	89	9.85	22.35	TC40
8	10	17.2	1.6	25.0	89	11.70	24.20	TC53
15	15	21.3	1.6	50.5	110	14.35	39.60	TC52
20	20	26.9	1.6	50.5	119	17.15	42.40	TC43
25	25	33.7	2.0	50.5	129	20.55	45.80	TC44
32	32	42.4	2.0	64.0	148	25.10	57.10	TC55
40	40	48.3	2.0	64.0	161	29.35	61.35	TC46
50	50	60.3	2.0	77.5	192	35.35	74.10	TC47
DIN 32676 series A (DIN pipe)								
8	10	13.0	1.5	34.0	89	9.85	26.85	TD41
15	15	19.0	1.5	34.0	110	13.20	30.20	TD42
15	20	23.0	1.5	34.0	119	15.20	32.20	TD43
20	25	29.0	1.5	50.5	129	18.20	43.45	TD44
25	32	35.0	1.5	50.5	148	21.20	46.45	TD45
32	40	41.0	1.5	50.5	161	24.40	49.65	TD46
40	50	53.0	1.5	64.0	192	31.70	63.70	TD47
ASME BPE								
8	½"	12.7	1.65	25.0	89	9.45	21.95	TG02
15	¾"	19.05	1.65	25.0	102	13.20	25.73	TG03
20	1"	25.4	1.65	50.5	114	16.40	41.65	TG04
32	1½"	38.10	1.65	50.5	140	22.95	48.20	TG05
40	2"	50.80	1.65	64.0	159	30.60	62.60	TG06
50	2½"	63.5	1.65	77.5	190	37.35	69.10	TG07

1.) This information is part of the product key (see "9.3. Bürkert Product Enquiry Form" on page 37).

DTS 1000450587 EN Version: S Status: RL (released | freigegeben | valide) printed: 24.06.2026

valvesgo.com

5.6. Tube valve body (VP) with threaded connection

Note:

- Dimensions in mm, unless otherwise stated
- Further information on the draining angle can be found in the "Additional manual Type 2xxx 3xxx" on our website (see **operating instructions Type 2031** ▶).

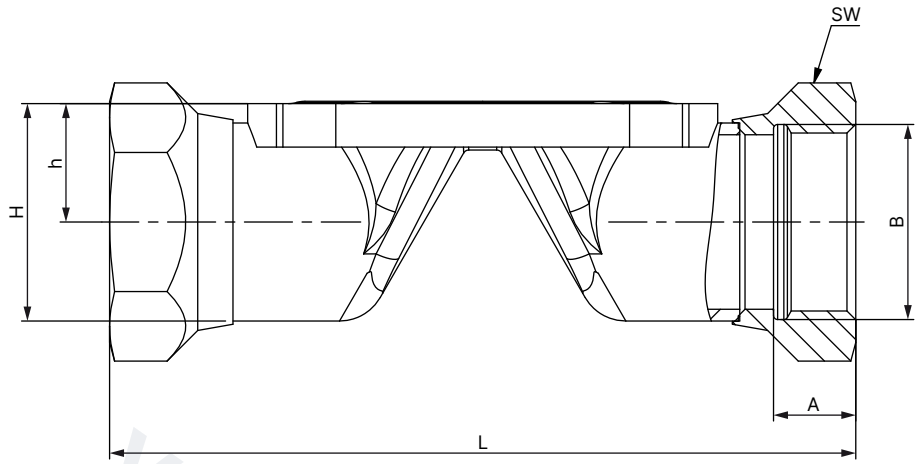

Diaphragm size	L	A	B	h	H	Spanner width of threaded ports	Product key [1.)]
8	85	9	G ¼	11.70	20.3	17	GM82
15	102	14	G ½	14.35	25.0	27	GM84
20	118	12	G ¾	17.15	30.45	32	GM85
25	127	14	G 1	20.55	37.4	41	GM86
32	146	16	G 1¼	25.10	46.3	50	GM87
40	159	18	G 1½	29.35	53.5	60	GM88
50	191	20	G 2	35.35	65.5	70	GM89
Diaphragm size	**L**	**A**	B	**h**	**H**	**Spanner width of threaded ports**	**Product key [1.)]**
8	85	9.7	Rc ¼	11.70	20.3	17	RC82
15	102	13.2	Rc ½	14.35	25.0	27	RC84
20	118	14.5	Rc ¾	17.15	30.45	32	RC85
25	127	16.8	Rc 1	20.55	37.4	41	RC86
32	146	19.1	Rc 1¼	25.10	46.3	50	RC87
40	159	19.1	Rc 1½	29.35	53.5	60	RC88
50	191	23.4	Rc 2	35.35	65.5	70	RC89
Diaphragm size	**L**	**A**	B	**h**	**H**	**Spanner width of threaded ports**	**Product key [1.)]**
8	85	10	NPT ¼	11.70	20.3	17	NM82
15	102	13.7	NPT ½	14.35	25.0	27	NM84
20	118	14	NPT ¾	17.15	30.45	32	NM85
25	127	16.8	NPT 1	20.55	37.4	41	NM86
32	146	17.3	NPT 1¼	25.10	46.3	50	NM87
40	159	17.3	NPT 1½	29.35	53.5	60	NM88
50	191	17.6	NPT 2	35.35	65.5	70	NM89

1.) This information is part of the product key (see "9.3. Bürkert Product Enquiry Form" on page 37).

DTS 1000450587 EN Version: S Status: RL (released | freigegeben | valide) printed: 24.06.2026

valvesgo.com

5.7. Tube valve body (VP) with flange connection

Note:

- Dimensions in mm, unless otherwise stated
- Further information on the draining angle can be found in the "Additional manual Type 2xxx 3xxx" on our website (see **operating instructions Type 2031** ▶).

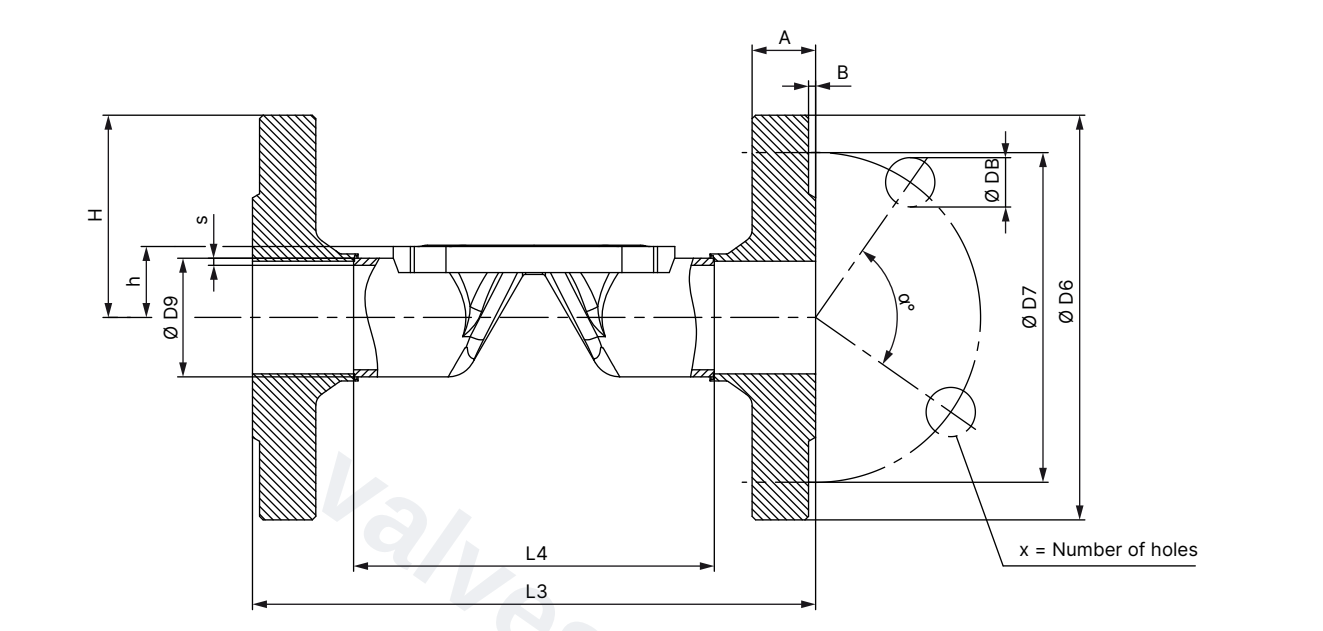

Diaphragm size	L4	L3	s	ØD9	ØD6	ØD7	a°	ØDB	A	B	X	Product key [1.)]
DIN EN 1092 - 1												
15	76.5	130	1.6	21.3	95	65	90	14	16	2	4	FD22
20	92.5	150	1.6	26.9	105	75	90	14	18	2	4	FD23
25	102.5	160	2.0	33.7	115	85	90	14	18	2	4	FD24
32	122.5	180	2.0	42.4	140	100	90	18	18	2	4	FD25
40	136.5	200	2.0	48.3	150	110	90	18	18	3	4	FD26
50	160.5	230	2.0	60.3	165	125	90	18	20	3	4	FD27
ANSI B16.5												
15	67.0	130	1.6	21.3	89	60.5	90	15.7	11.2	1.6	4	FA02
20	83.0	150	1.6	26.9	99	69.9	90	15.7	12.7	1.6	4	FA03
25	106.0	160	2.0	33.7	108	79.2	90	15.7	14.2	1.6	4	FA04
40	128.0	200	2.0	48.3	127	98.6	90	15.7	17.5	1.6	4	FA06
50	151.0	230	2.0	60.3	152	120.7	90	19.1	19.1	1.6	4	FA07
JIS 10K												
15	89	130	1.6	21.3	95	70	90	15	12	1	4	FJ01
20	103	150	1.6	26.9	100	75	90	15	14	1	4	FJ02
25	116	160	2.0	33.7	125	90	90	19	14	1	4	FJ03
40	147	200	2.0	48.3	140	105	90	19	16	2	4	FJ05
50	175	230	2.0	60.3	155	120	90	19	16	2	4	FJ06

1.) This information is part of the product key (see "9.3. Bürkert Product Enquiry Form" on page 37).

DTS 1000450587 EN Version: S Status: RL (released | freigegeben | valide) printed: 24.06.2026

valvesgo.com

5.8. Cast valve body (VG) with welded connection

Note:

- Dimensions in mm, unless otherwise stated
- Further information on the draining angle can be found in the "Additional manual Type 2xxx 3xxx" on our website (see **operating instructions Type 2031** ▶).

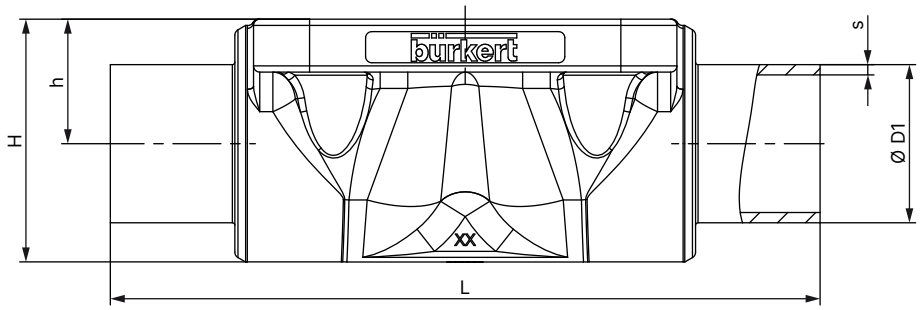

Diaphragm size	Port connection DN	Ø D1	s	L	h	H	Product key [1.)]
DIN EN ISO 1127 / ISO 4200 / DIN 11866 series B							
6	8	13.5	1.6	72	8.5	18.0	SA40
8	8	13.5	1.6	90	9.6	18.5	SA40
8	10	17.2	1.6	90	9.6	18.6	SA41
15	15	21.3	1.6	110	13.5	25.0	SA42
20	15	21.3	1.6	119	18.0	32.9	SA42
20	20	26.9	1.6	119	18.0	32.7	SA43
25	25	33.7	2.0	129	20.0	39.0	SA44
40	32	42.4	2.0	161	28.6	55.0	SA45
40	40	48.3	2.0	161	28.6	55.0	SA46
50	50	60.3	2.0	192	35.5	68.0	SA47
65	65	76.1	2.0	192	43.0	82.0	SA48
80	80	76.1	2.0	250	51.0	101.0	SA48
80	80	88.9	2.3	250	51.0	101.0	SA49
100	100	114.3	2.3	295	63.5	123.5	SA39
DIN 11850 - 2 / DIN 11866 series A / DIN EN 10357 series A							
6	10	13	1.5	72	8.5	18.0	SD40
8	10	13	1.5	90	9.6	18.6	SD40
15	15	19	1.5	110	13.5	25.0	SD42
20	20	23	1.5	119	18.0	32.8	SD43
25	25	29	1.5	129	20.0	39.0	SD44
40	40	41	1.5	161	28.6	55.0	SD46
50	50	53	1.5	192	35.5	68.0	SD47
65	65	70	2.0	192	43.0	82.0	SD48
80	80	85	2.0	250	51.0	101.0	SD49
100	100	104	2.0	295	63.5	123.5	SD50
ASME BPE / DIN 11866 series C							
6	⅜"	9.53	0.89	72	8.5	18.0	SA91
6	½"	12.7	1.65	72	8.5	18.0	SA92
8	¼"	6.35	0.89	64.5	9.6	18.6	SA90
8	⅜"	9.53	0.89	89	9.6	18.6	SA91
8	½"	12.7	1.65	89	9.6	18.6	SA92
15	¾"	19.05	1.65	102	13.5	25.0	SA93
20	¾"	19.05	1.65	119	18.0	32.8	SA93
20	1"	25.4	1.65	119	18.0	32.7	SODF
25	1"	25.4	1.65	114	20.0	39.0	SODF
40	1½"	38.1	1.65	140	28.6	55.0	SODH
50	2"	50.8	1.65	159	35.5	68.0	SODI

DTS 1000450587 EN Version: S Status: RL (released | freigegeben | valide) printed: 24.06.2026

valvesgo.com

Diaphragm size	Port connection DN	Ø D1	s	L	h	H	Product key [1.)]
50	2½"	63.5	1.65	192	35.5	68.0	SODJ
65	2½"	63.5	1.65	192	43.0	82.0	SODJ
80	3"	76.2	1.65	250	51.0	101.0	SODK
100	4"	101.6	2.11	295	63.5	123.5	SODL
BS 4825							
8	8	6.35	1.20	64.5	9.6	18.6	SODB
8	10	9.53	1.20	89	9.6	18.6	SODC
8	15	12.7	1.20	89	9.6	18.6	SODD
15	20	19.05	1.20	102	14.0	25.5	SODE
20	25	25.4	1.65	119	18.0	32.8	SODF
25	25	25.4	1.65	114	20.0	39.0	SODF
40	40	38.1	1.65	140	28.6	55.0	SODH
50	50	50.8	1.65	159	35.5	68.0	SODI
50	65	63.5	1.65	192	35.5	68.0	SODJ
65	65	63.5	1.65	192	43.0	82.0	SODJ
80	80	76.2	1.65	250	51.0	101.0	SODK
100	100	101.6	2.11	295	63.5	123.5	SODL
SMS 3008							
20	25	25	1.2	119	18.0	32.8	SA60
25	25	25	1.2	129	20.0	39.0	SA60
40	40	38	1.2	161	28.6	55.0	SA62
50	50	51	1.2	192	35.5	68.0	SA63
DIN 11850 series 0							
8	4	6	1.0	90	9.6	18.6	SC40
8	6	8	1.0	90	9.6	18.6	SC41
8	8	10	1.0	90	9.6	18.6	SC42
15	15	18	1.5	110	13.5	25.0	SC43
20	20	22	1.5	119	18.0	32.8	SC44
25	25	28	1.5	129	20.0	39.0	SC45
25	32	34	1.5	129	20.0	39.0	SC46
40	40	40	1.5	161	28.6	56.0	SC47
50	50	52	1.5	192	35.5	68.0	SC48

1.) This information is part of the product key (see "9.3. Bürkert Product Enquiry Form" on page 37).

DTS 1000450587 EN Version: S Status: RL (released | freigegeben | valide) printed: 24.06.2026

valvesgo.com

valvesgo.com

5.9. Cast valve body (VG) with clamp connection

Note:

- Dimensions in mm, unless otherwise stated
- Further information on the draining angle can be found in the "Additional manual Type 2xxx 3xxx" on our website (see **operating instructions Type 2031** ▶).

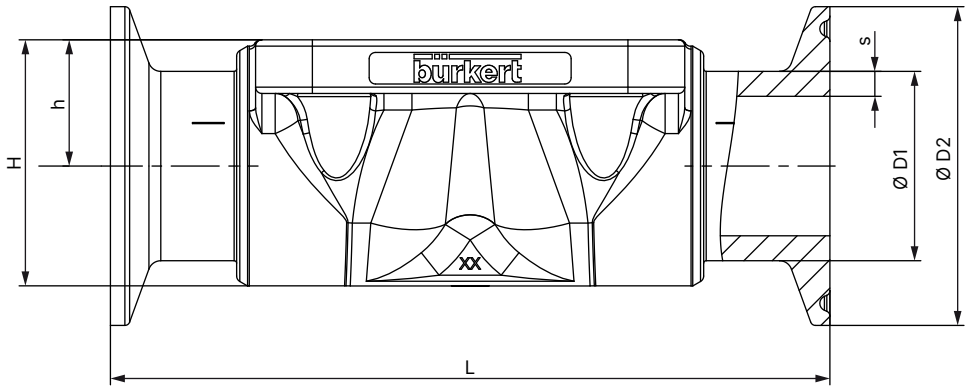

Diaphragm size	Port connection DN	Ø D1	s	Ø D2	L	h	H	Product key [1.)]
DIN 32676 series B (ISO pipe)								
25	25	33.7	2	50.5	129	20.0	39.0	TC44
40	40	48.3	2	64.0	161	28.6	55.0	TC46
50	50	60.3	2	77.5	192	35.5	68.0	TC47
DIN 32676 series A (DIN pipe)								
15	15	19	1.5	34.0	110	13.5	25.0	TD42
20	20	23	1.5	34.0	119	18.0	32.8	TD43
25	25	29	1.5	50.5	129	20.0	39.0	TD44
40	40	41	1.5	50.5	161	28.6	55.0	TD46
50	50	53	1.5	64.0	192	35.5	68.0	TD47
ASME BPE								
6	¼"	6.35	0.89	25.0	63.5	8.5	17.5	TG50
6	⅜"	9.53	0.89	25.0	63.5	8.5	17.5	TG01
6	½"	12.7	1.65	25.0	63.5	8.5	17.5	TG02
8	⅜"	9.53	0.89	25.0	89	9.6	18.6	TG01
8	½"	12.7	1.65	25.0	89	9.6	18.6	TG02
15	¾"	19.05	1.65	25.0	102	13.5	23.0	TG03
20	¾"	19.05	1.65	25.0	117	18.0	25.0	TG03
25	1"	25.4	1.65	50.5	114	18.0	40.0	TG04
40	1½"	38.1	1.65	50.5	140	28.6	55.0	TG05
50	2"	50.8	1.65	64.0	159	35.5	68.0	TG06
50	2½"	63.5	1.65	77.5	190	35.5	68.0	TG07
65	2½"	63.5	1.65	77.5	249.2	43.0	82.0	TG07
80	3"	76.2	1.65	91	306.2	51.0	101.0	TG08
100	4"	101.6	2.11	119	352.2	63.5	123.5	TG09
BS 4825: Clamp BS 4825 - 3 / pipe BS 4825 - 1								
8	15	12.7	1.2	25	89	9.6	18.9	TH42
15	20	19.05	1.2	25	102	13.5	25.0	TH43
25	25	25.4	1.65	50.5	114	20.0	39.0	TG04
40	40	38.1	1.65	50.5	140	28.6	55.0	TG05
50	50	50.8	1.65	64.0	159	35.5	68.0	TG06
50	65	63.5	1.65	77.5	190	35.5	68.0	TG07
Clamp 34.0 similar to DIN 32676 series B (ISO pipe)								
15	15	21.3	1.6	34	110	13.5	25.0	TC42

1.) This information is part of the product key (see "9.3. Bürkert Product Enquiry Form" on page 37).

DTS 1000450587 EN Version: S Status: RL (released | freigegeben | valide) printed: 24.06.2026

valvesgo.com

5.10. Plastic valve body (PV, PP, PD) with spigot connection

Note:

- Dimensions in mm. unless otherwise stated
- The specified values refer to the new plastic body. The previous bodies (REV1) may differ slightly from the new dimensions.

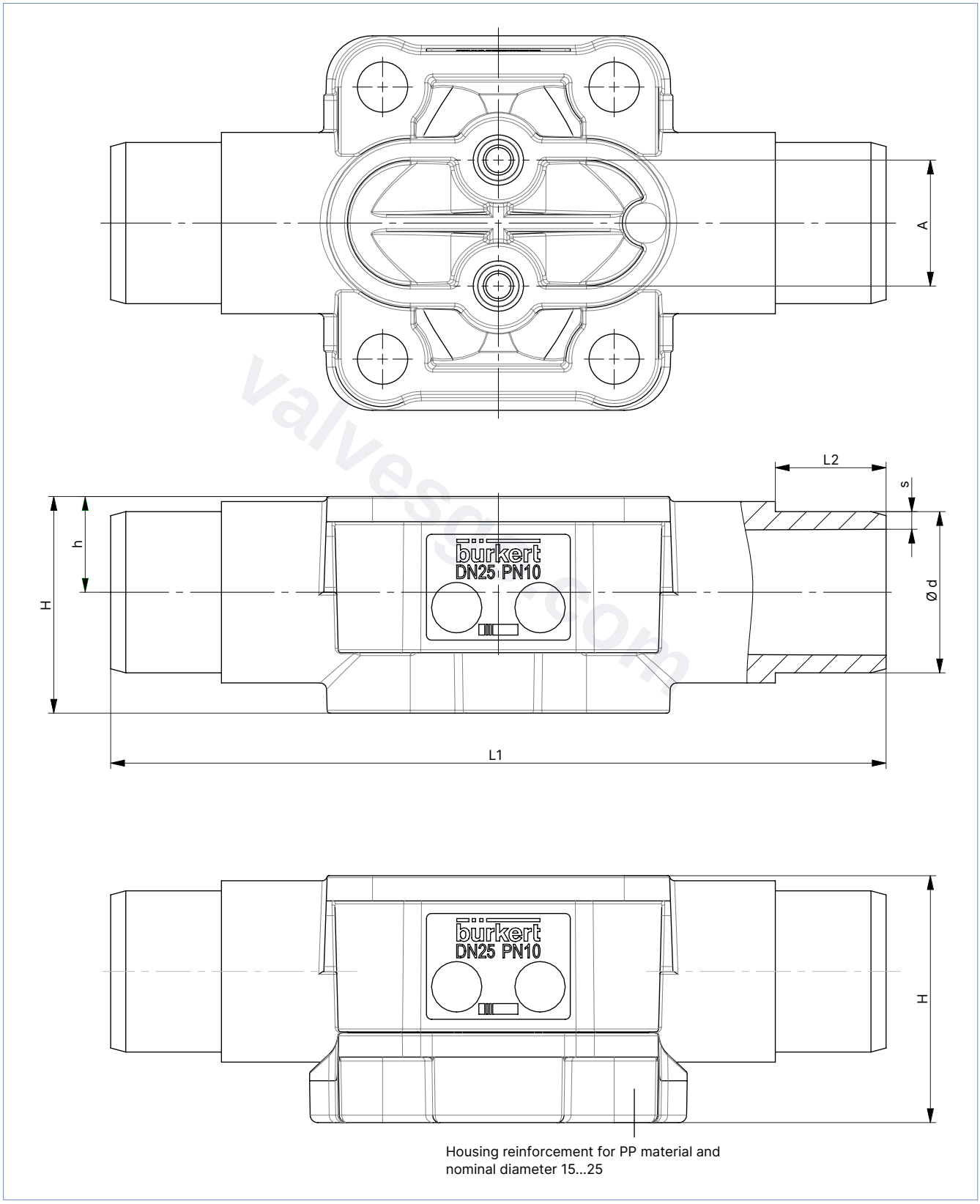

DTS 1000450587 EN Version: S Status: RL (released | freigegeben | valide) printed: 24.06.2026

valvesgo.com

Diaphragm size	A	L1	L2	Ø d	s	h	H	Product key [1.)]
PP (PP)								
15	25	124	16	20	2.5	12	33	SS25
20	25	144	19	25	2.5	17	42	SS26
25	25	154	22	32	3.5	19	49	SS27
32	45	174	26	40	4	25	52.5	SS28
40	45	194	31	50	5	28.6	65.5	SS29
50	45	224	44	63	6.5	35.5	79	SS30
PVDF (PD)								
15	25	124	16	20	2.5	12	29	SS25
20	25	144	19	25	2.5	17	36	SS26
25	25	154	22	32	3.5	19	43	SS27
32	45	174	26	40	4	25	52.5	SS28
40	45	194	31	50	5	28.6	65.5	SS29
50	45	224	44	63	6.5	35.5	79	SS30
PVC-U (PV)								
15	25	124	16	20	2.5	12	29	KS25
20	25	144	19	25	2.5	17	36	KS26
25	25	154	22	32	3.5	19	43	KS27
32	45	174	26	40	4	25	52.5	KS28
40	45	194	31	50	5	28.6	65.5	KS29
50	45	224	44	63	6.5	35.5	79	KS30

1.) This information is part of the product key (see "9.3. Bürkert Product Enquiry Form" on page 37).

DTS 1000450587 EN Version: S Status: RL (released | freigegeben | valide) printed: 24.06.2026

valvesgo.com

valvesgo.com

5.11. Plastic valve body (PW, PV, PP, PD) with true union

Note:

- Dimensions in mm. unless otherwise stated
- The specified values refer to the new plastic body. The previous bodies (REV1) may differ slightly from the new dimensions.

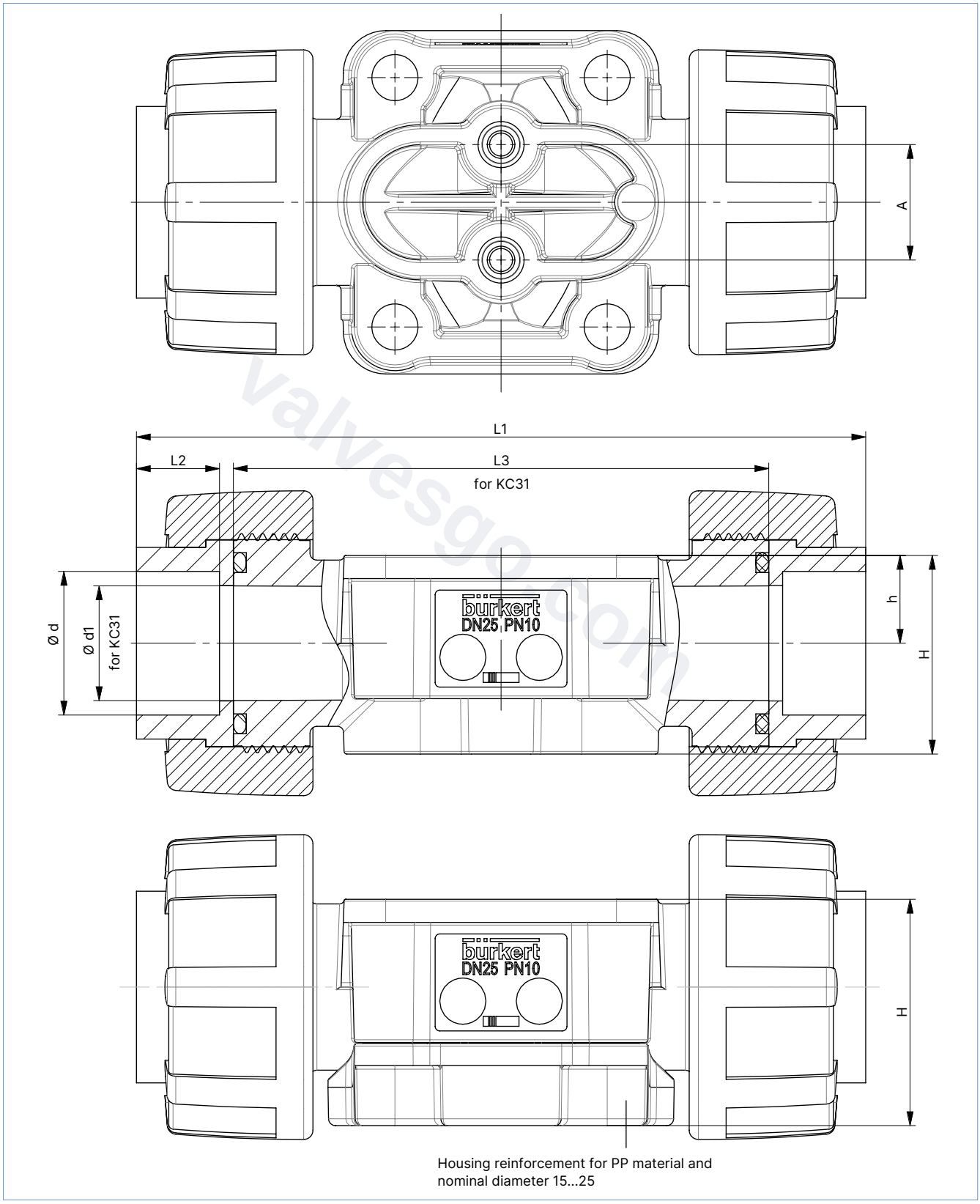

DTS 1000450587 EN Version: S Status: RL (released | freigegeben | valide) printed: 24.06.2026

valvesgo.com

Diaphragm size	A	L1	L2	L3	Ø d	Ø d1	h	H	Product key [1)]	Variable code
PP (PP)										
15	25	125	14.5	–	19.2	–	12	33	SM25	–
20	25	146	16	–	24.2	–	17	42	SM26	
25	25	158	18	–	31.1	–	19	49	SM27	
32	45	181	20.5	–	39	–	25	52.5	SM28	
40	45	207	23.5	–	48.9	–	28.6	65.5	SM29	
50	45	245	27.5	–	61.6	–	35.5	79	SM30	
15	25	–	–	90	–	14.9	12	33	SM25	KC31 Port connection without insert, O-ring and union nut
20	25	–	–	108	–	19.9	17	42	SM26	
25	25	–	–	116	–	24.9	19	49	SM27	
32	45	–	–	134	–	31.9	25	52.5	SM28	
40	45	–	–	154	–	39.9	28.6	65.5	SM29	
50	45	–	–	184	–	49.9	35.5	79	SM30	
15	25	132	18	–	20	–	12	33	KM25	Optionally available with variable code KC93 insert made of PVC-C
20	25	156	21	–	25	–	17	42	KM26	
25	25	170	24	–	32	–	19	49	KM27	
32	45	196	28	–	40	–	25	52.5	KM28	
40	45	222	31	–	50	–	28.6	65.5	KM29	
50	45	266	38	–	63	–	35.5	79	KM30	
PVDF (PD)										
15	25	125	14.5	–	19.2	–	12	29	SM25	–
20	25	146	16	–	24.2	–	17	36	SM26	
25	25	158	18	–	31.1	–	19	43	SM27	
32	45	181	20.5	–	39	–	25	52.5	SM28	
40	45	207	23.5	–	48.9	–	28.6	65.5	SM29	
50	45	245	27.5	–	61.6	–	35.5	79	SM30	
15	25	–	–	90	–	14.9	12	29	SM25	KC31 Port connection without insert, O-ring and union nut
20	25	–	–	108	–	19.9	17	36	SM26	
25	25	–	–	116	–	24.9	19	43	SM27	
32	45	–	–	134	–	31.9	25	52.5	SM28	
40	45	–	–	154	–	39.9	28.6	65.5	SM29	
50	45	–	–	184	–	49.9	35.5	79	SM30	
15	25	132	18	–	20	–	12	29	KM25	Optionally available with variable code KC93 insert made of PVC-C
20	25	156	21	–	25	–	17	36	KM26	
25	25	170	24	–	32	–	19	43	KM27	
32	45	196	28	–	40	–	25	52.5	KM28	
40	45	222	31	–	50	–	28.6	65.5	KM29	
50	45	266	38	–	63	–	35.5	79	KM30	

DTS 1000450587 EN Version: S Status: RL (released | freigegeben | valide) printed: 24.06.2026

valvesgo.com

valvesgo.com

Diaphragm size	A	L1	L2	L3	Ø d	Ø d1	h	H	Product key [1.)]	Variable code
PVC-U (PV)										
15	25	128	16	–	20	–	12	29	KM25	–
20	25	152	19	–	25	–	17	36	KM26	
25	25	166	22	–	32	–	19	43	KM27	
32	45	192	26	–	40	–	25	52.5	KM28	
40	45	222	31	–	50	–	28.6	65.5	KM29	
50	45	266	38	–	63	–	35.5	79	KM30	
15	25	–	–	90	–	14.9	12	29	KM25	KC31 Port connection without insert, O-ring and union nut
20	25	–	–	108	–	19.9	17	36	KM26	
25	25	–	–	116	–	24.9	19	43	KM27	
32	45	–	–	134	–	31.9	25	52.5	KM28	
40	45	–	–	154	–	39.9	28.6	65.5	KM29	
50	45	–	–	184	–	49.9	35.5	79	KM30	
15	25	140.6	22.3	–	21.5	–	12	29	KM41	–
20	25	164.8	25.4	–	26.7	–	17	36	KM42	
25	25	179.2	28.6	–	33.5	–	19	43	KM43	
32	45	203.6	31.8	–	42.3	–	25	52.5	KM44	
40	45	230	35	–	48.6	–	28.6	65.5	KM45	
50	45	266.2	38.1	–	60.6	–	35.5	79	KM46	
PVC-C (PW)										
15	25	–	–	90	–	14.9	12	29	KM25	KC31 Port connection without insert, O-ring and union nut
20	25	–	–	108	–	19.9	17	36	KM26	
25	25	–	–	116	–	24.9	19	43	KM27	
32 [2.)]	45	–	–	134	–	31.9	25	52.5	KM28	
40 [2.)]	45	–	–	154	–	39.9	28.6	65.5	KM29	
50 [2.)]	45	–	–	184	–	49.9	35.5	79	KM30	
15	25	132	18	–	20	–	12	29	KM25	–
20	25	156	21	–	25	–	17	36	KM26	
25	25	170	24	–	32	–	19	43	KM27	
32 [2.)]	45	196	28	–	40	–	25	52.5	KM28	
40 [2.)]	45	222	31	–	50	–	28.6	65.5	KM29	
50 [2.)]	45	266	38	–	63	–	35.5	79	KM30	

1.) This information is part of the product key (see "9.3. Bürkert Product Enquiry Form" on page 37).
2.) Available soon

DTS 1000450587 EN Version: S Status: RL (released | freigegeben | valide) printed: 24.06.2026

valvesgo.com

5.12. Plastic valve body (PV, PP, PD) with flange connection

Note:

- Dimensions in mm. unless otherwise stated
- The specified values refer to the new plastic body. The previous bodies (REV1) may differ slightly from the new dimensions.

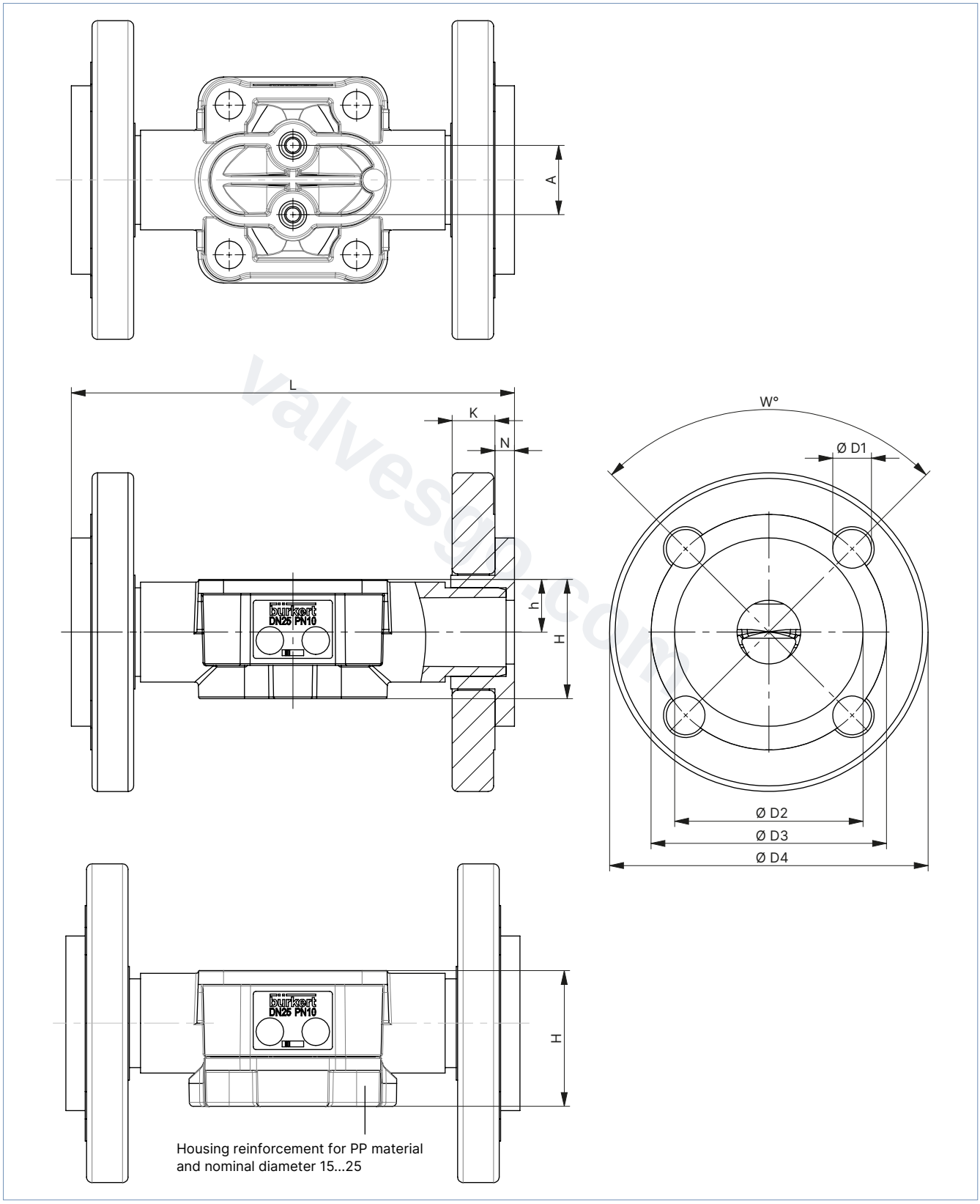

DTS 1000450587 EN Version: S Status: RL (released | freigegeben | valide) printed: 24.06.2026

valvesgo.com

Diaphragm size	A	L	K	N	h	H	W°	Ø D1	Ø D2	Ø D3	Ø D4	Product key [1.)]
PP (PP)												
15	25	134	13.5	7	12	33	90	4×14	45	65	95	FL24
20	25	154	14.5	7	17	42	90	4×14	54	75	105	FL25
25	25	164	15.5	7	19	49	90	4×14	63	85	115	FL26
32	45	184	17.5	8	25	52.5	90	4×18	73	100	140	FL27
40	45	204	17.5	8	28.6	65.5	90	4×18	82	110	150	FL28
50	45	234	19.5	14	35.5	79	90	4×18	102	125	166	FL29
65	72	290	19	–	47	93	90	4×17.5	106	144	185	FL30
80	120	310	36	–	50	107	45	8×18	–	160	200	FF31
100	120	350	35	–	65.5	134.5	45	8×18	–	180	225	FF32
PVDF (PD)												
15	25	130	13.5	6	12	29	90	4×14	45	65	95	FL24
20	25	150	14.5	7	17	36	90	4×14	58	75	105	FL25
25	25	160	15.5	7	19	43	90	4×14	68	85	115	FL26
32	45	180	17.5	8	25	52.5	90	4×18	78	100	140	FL27
40	45	200	17.5	8	28.6	65.5	90	4×18	88	110	150	FL28
50	45	230	19.5	9	35.5	79	90	4×18	102	125	166	FL29
65	72	290	19	–	47	93	90	4×17.5	106	144	185	FL30
80	120	310	36	–	50	107	45	8×18	–	160	200	FF31
100	120	350	35	–	65.5	134.5	45	8×18	–	180	225	FF32
PVC-U (PV)												
15	25	130	13.5	6	12	29	90	4×14	34	65	95	FL24
20	25	150	14.5	7	17	36	90	4×14	41	75	105	FL25
25	25	160	15.5	7	19	43	90	4×14	50	85	115	FL26
32	45	180	17.5	8	25	52.5	90	4×18	61	100	140	FL27
40	45	200	17.5	8	28.6	65.5	90	4×18	73	110	150	FL28
50	45	230	19.5	9	35.5	79	90	4×18	90	125	166	FL29
65	72	290	19	–	47	93	90	4×17.5	106	144	185	FL30
80	120	310	36	–	50	107	45	8×18	–	160	200	FF31
100	120	350	35	–	65.5	134.5	45	8×18	–	180	225	FF32

1.) This information is part of the product key (see "9.3. Bürkert Product Enquiry Form" on page 37).

DTS 1000450587 EN Version: S Status: RL (released | freigegeben | valide) printed: 24.06.2026

valvesgo.com

6. Performance specifications

6.1. Flow rate characteristics

Note:

- The K_V values may vary slightly with different actuator sizes and diaphragm materials.
- More K_V values are available on request.
- Flow rate: K_V value water (m^3/h) for elastomer diaphragms
- Measurement at + 20 °C, 4 bar at valve inlet and 3 bar at valve outlet

Forged steel valve body (VS), block body (VI)

Diaphragm size	Port connection		K_V value [m^3/h]					
			DIN EN ISO 1127 ISO 4200 DIN 11866 series B	DIN 11850 - 2 DIN 11866 series A DIN EN 10357 series A	ASME BPE DIN 11866 series C	DIN 11850 series 0	BS4825	SMS3008
	[mm]	[inch]	[m^3/h]	[m^3/h]	[m^3/h]	[m^3/h]	[m^3/h]	[m^3/h]
6	6	⅛	–	–	–	1.1	–	–
6	8	¼	2.2	–	0.7	–	–	–
6	10	⅜	–	2.0	1.6	–	–	–
6	15	½	–	–	2.0	–	–	–
8	6	⅛	–	–	–	1.1	–	–
8	8	¼	1.5	–	0.7	1.7	0.5	–
8	10	⅜	1.5	1.5	1.6	–	1.4	–
8	15	½	–	–	1.9	–	–	–
15	10	⅜	5.5	3.5	–	–	–	–
15	15	½	6.5	6.5	3.1	–	3.7	–
15	20	¾	–	–	6.5	–	–	–
20	20	¾	12.5	12.4	8.4	–	8.9	–
25	25	1	18	20	15.5	–	15.5	16
40	32	1¼	–	34	–	–	–	–
40	40	1½	41	40	37	–	37	38
50	50	2	66	66	66	–	66	66
50	65	2½	–	–	66	–	66	66
65	65	2½	110	–	110	–	–	–
80	80	3	160	160	160	–	–	–
100	100	4	235	235	235	–	–	–

DTS 1000450587 EN Version: S Status: RL (released | freigegeben | valide) printed: 24.06.2026

valvesgo.com

valvesgo.com

Tube valve body (VP)

Diaphragm size	Port connection		K_V value [m³/h]		
			DIN EN ISO 1127 ISO 4200 DIN 11866 series B	DIN 11850 - 2 DIN 11866 series A DIN EN 10357 series A	ASME BPE DIN 11866 series C
	[mm]	[inch]	[m³/h]	[m³/h]	[m³/h]
8	8	¼	1.9	–	–
8	10	⅜	1.7	1.9	–
8	15	½	–	–	1.8
15	15	½	7.2	7.4	–
15	20	¾	–	7.4	7.1
20	20	¾	13.5	–	–
20	25	1	–	14.9	12.8
25	32	1¼	–	22.3	–
25	25	1	20.8	–	–
32	32	1¼	36	–	–
32	40	1½	–	34.8	31
40	40	1½	47.9	–	–
40	50	2	–	46.2	43
50	50	2	69.7	–	–
50	65	2½	–	–	60
65	80	3	–	–	75
80	100	4	–	–	145

Cast valve body (VG)

Diaphragm size	Port connection		K_V value
	[mm]	[inch]	[m³/h]
6	8	¼	1
8	8	¼	1
15	15	½	5.6
20	20	¾	10.7
25	25	1	14.6
40	40	1½	35
50	50	2	47
65	65	2½	110
80	80	3	130
100	100	4	150

DTS 1000450587 EN Version: S Status: RL (released | freigegeben | valide) printed: 24.06.2026

valvesgo.com

valvesgo.com

Plastic valve body (PW, PV, PP, PD)

Diaphragm size	Seal material	Port connection		K_V value	
				Previous plastic valve body Product key REV1	New plastic valve body
		[mm]	[inch]	[m³/h]	
15	EPDM	15	½	3	8.1
	PTFE/EPDM				7.5
20	EPDM	20	¾	7	14.1
	PTFE/EPDM				13.1
25	EPDM	25	1	11.4	25.5
	PTFE/EPDM				21.5
32	EPDM	32	1¼	17	38.5
	PTFE/EPDM				37.5
40	EPDM	40	1½	24.5	57
	PTFE/EPDM				56
50	EPDM	50	2	41.5	92
	PTFE/EPDM				92
65	EPDM	65	2½	60	–
	PTFE/EPDM				
80	EPDM	80	3	105	–
	PTFE/EPDM				
100	EPDM	100	4	154	–
	PTFE/EPDM				

DTS 1000450587 EN Version: S Status: RL (released | freigegeben | valide) printed: 24.06.2026

valvesgo.com

valvesgo.com

6.2. Medium pressure

Specifications for control function A

Note:

- For low operating pressures, optional variants with reduced spring force (EC04) are recommended.
- Pressure data [bar]: Overpressure to atmospheric pressure. Static: When closed, the valve is pressurised on one side with the maximum operating pressure.
- Specifications for control functions B and I are available on request.

Diaphragm size	Actuator size Ø	Pilot pressure	Maximum static operating pressure for seal materials	
			EPDM, FKM	PTFE/EPDM, advanced PTFE/EPDM, laminate of GYLON® and EPDM
	[mm]	[bar]	[bar]	[bar]
6	40 (C)	5.0...7	10 1.)	10 2.)
8	40 (C)	5.0...7	10	10
15	50 (D)	5.0...7	10	–
	63 (E)	5.0...7	10	10
20	63 (E)	5.5...7	10	10
	80 (F)	5.0...7	10	10
25	80 (F)	5.5...7	10	10
32	100 (G)	5.5...7	10	10
40	100 (G)	5.5...7	10	9 3.)
	125 (H)	5.5...7	10	10
50	125 (H)	5.5...7	10	10
65	175 (K)	5.0...6	10	6
80	175 (K)	5.0...6	7	4 4.)
	225 (L)	5.0...6	10	10
100	225 (L)	5.0...6	10	7

1.) EPDM (AD diaphragm) only available
2.) Laminate of GYLON® and EPDM (ER diaphragm) only available
3.) The maximum operating pressure for laminate of GYLON® and EPDM (ER diaphragm) is 6 bar.
4.) The tightness value only applies to laminate of GYLON® and EPDM (ER diaphragm), otherwise 0 bar for PTFE/EPDM and advanced PTFE/EPDM (EA and EU diaphragms).

DTS 1000450587 EN Version: S Status: RL (released | freigegeben | valide) printed: 24.06.2026

valvesgo.com

valvesgo.com

7. Product accessories

Electric position feedback indicator	
Type 8697 ▸ Actuator size Ø 40...225 mm	
	The position feedback Type 8697 is designed for integrated mounting on CLASSIC series 20XX process valves, suiting the requirements of hygienic process environments. Mechanical or inductive limit switches register the position of the valve. **Features** • Compact design • LED position indicator • Mechanical or inductive limit switches for end position registering • Easy-to-clean clean chemically resistant housing featuring IP65/IP67, 4X Rating • Optionally intrinsically safe variant according to IECEx **Customer benefits** • Easy and quick installation • High level of signal reliability thanks to self-adjusting limit switches • Minimised space requirement in the plant piping for more flexibility in plant design

valvesgo.com

DTS 1000450587 EN Version: S Status: RL (released | freigegeben | valide) printed: 24.06.2026

valvesgo.com

8. Networking and combination with other Bürkert products

Note:
The **on/off CLASSIC valve system Type 8801-DA (alternatively 8801-DB)** consists of a **diaphragm valve Type 2030 (alternatively Type 2031)** and a **position feedback Type 8697.**

You order two components and receive a completely assembled and tested valve.

Example:

Diaphragm valve

Type 2030
Type 2031

Position feedback

Type 8697 ▸
Pneumatic control for decentralised automation of ELEMENT process valves

Ventilsystem on/off CLASSIC

Valve system
Type 8801-DA-U
Type 8801-DB-U

DTS 1000450587 EN Version: S Status: RL (released | freigegeben | valide) printed: 24.06.2026

valvesgo.com

valvesgo.com

9. Ordering information

9.1. Bürkert eShop

Bürkert eShop – Easy ordering and quick delivery

You want to find your desired Bürkert product or spare part quickly and order directly? Our online shop is available for you 24/7. Sign up and enjoy all the benefits.

Order online now

9.2. Bürkert product filter

Bürkert product filter – Get quickly to the right product

You want to select products comfortably based on your technical requirements?
Use the Bürkert product filter and find suitable articles for your application quickly and easily.

Try out our product filter

9.3. Bürkert Product Enquiry Form

Note:
Please see our Product Enquiry Form for a full explanation of our specification key.

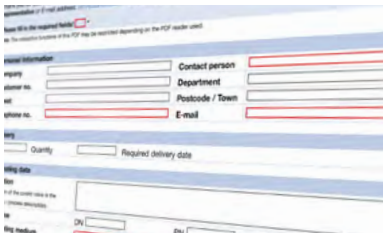

Bürkert Product Enquiry Form – Your enquiry quickly and compactly

Would you like to make a specific product enquiry based on your technical requirements? Use our Product Enquiry Form for this purpose. There you will find all the relevant information for your Bürkert contact. This will enable us to provide you with the best possible advice.

Fill out the form now

DTS 1000450587 EN Version: S Status: RL (released | freigegeben | valide) printed: 24.06.2026

valvesgo.com