bürkert
FLUID CONTROL SYSTEMS

I/O module, IP20

- Configurable input and output modules for analogue and digital signals
- Integrated diagnostic possibilities such as wire break, short circuit detection
- Installation and disassembly without tools
- Colour-coded push-in connectors to avoid wiring errors
- Available modules: 8-channel DI, 8-channel DO, 4-channel AI, 4-channel AO, 8-channel DO – Liquid Dosing Open Loop

Product variants described in the data sheet may differ from the product presentation and description.

Can be combined with

Type ME43
Fieldbus gateway

Type 8741
Mass flow controller (MFC)/mass flow meter (MFM) for gases

Type 8652
AirLINE – the valve island optimised for process automation

Type 8316
Pressure measuring device

Type 6027
Direct-acting 2/2-way plunger valve

Type description

Bürkert I/O modules Type ME44 for extending the fieldbus gateway Type ME43 are used both to capture sensor signals and to specify set-point values or switching operations.

The analogue modules import analogue sensor signals (e.g. from pressure transmitters) or specify analogue set-point values (e.g. for a flow controller). The further processing of input signals, e.g. via a fieldbus to a higher field level, or the targeted output of set-point signals is configured via the fieldbus gateway Type ME43.

The digital modules can be used for the feedback of switches or the output of switching signals. Once again, a configuration for Type ME43 specifies how these inputs and outputs are processed or controlled.

The I/O modules Type ME44 are plugged onto a so-called backplane, which in turn is connected to the gateway Type ME43. Up to 9 Type ME44 modules can be connected via 3 backplanes to one gateway Type ME43. Type ME43 and Type ME44 modules are part of the Bürkert EDIP (Efficient Device Integration Platform) concept. They facilitate the integration of field level devices (e.g. valves or sensors) in the higher control level. All I/Os of the modules comply with IEC 61131 - 2.

DTS 1000353026 EN Version: R Status: RL (released | freigegeben | valide) printed: 13.05.2026

© Christian Bürkert GmbH & Co. KG, Subject to alteration

Visit product website

valvesgo.com

Table of contents

1. General technical data 3

1.1. I/O module 3
1.2. 4AI module (analogue input module) 3
1.3. 4AO module (analogue output module) 4
1.4. 8DI module (digital input module) 4
1.5. 8DO module (digital output module, P-switching) 5
1.6. 8DO module: digital output Liquid Dosing Open Loop 5

2. Approvals and conformities 6

2.1. General notes 6
2.2. Conformity 6
2.3. Standards 6
2.4. North America (USA/Canada) 6

3. Dimensions 7

3.1. 3 I/O modules on 3-fold backplane mounted on gateway Type ME43 7
3.2. I/O module 7
3.3. 3-fold backplane 8

4. Device/Process connections 9

4.1. Electrical assignment and circuit diagram for 4AI module 9
4.2. Electrical assignment and circuit diagram for 4AO module 9
4.3. Electrical assignment and circuit diagram for 8DI module 10
4.4. Electrical assignment and circuit diagram for 8DO module/8DO module Liquid Dosing Open Loop 10

5. Product design and assembly 11

5.1. Product features 11

6. Ordering information 11

6.1. Bürkert eShop 11
6.2. Bürkert product filter 11
6.3. Ordering chart 12
6.4. Ordering chart accessories 12

DTS 1000353026 EN Version: R Status: RL (released | freigegeben | valide) printed: 13.05.2026

valvesgo.com

valvesgo.com

1. General technical data

1.1. I/O module

Product properties	
Dimensions	Further information can be found in chapter "3. Dimensions" on page 7.
Weight	0.3 kg
Material	
Body	PC (polycarbonate)
Status display	RGB LED according to NAMUR NE107, one status LED per channel
Approvals and conformities	
Further information can be found in chapter "2. Approvals and conformities" on page 6.	
Environment and installation	
Ambient temperature	- 20 °C...+ 60 °C
Storage temperature	- 30 °C...+ 80 °C
Degree of protection	IP20 according to EN 60529 / IEC 60529
Height above sea level	Maximum 2000 m

1.2. 4AI module (analogue input module)

Product properties	
Configurable input (AI as DI)	AI can also be used as DI (configuration **via software Bürkert Communicator Type 8920** ▶)
Diagnostics	Detection of error conditions (at 3.5 mA and 22 mA according to NAMUR NE43) Detection of an interruption in current input (open loop)
Safety	Reverse polarity protection, protection against overvoltage (up to at least ± 30 V)
Electrical data	
Electrical variant	Current input or voltage input
Operating voltage	24 V DC ± 10 % (via backplane BPX3)
Permissible conductor connection cross-section	0.20...1.5 mm² / AWG 16...24
Operating mode	0...20 mA 4...20 mA 0...10 V 0...5 V 0...2 V
Accuracy	± 0.1 % Full Scale Range (FSR) Temperature coefficient: Current input: ± 35 ppm FSR/K Voltage input: ± 40 ppm FSR/K
Input impedance	Current measurement at 25 °C ≤ 110 Ω Voltage measurement at 25 °C ≥ 115 kΩ
Maximum sensor supply	50 mA per channel
Maximum AUX power consumption	4× 50 mA (for sensor supply)
Maximum current of module	25 mA
Galvanic isolation	For system bus on backplane, no separation between the inputs, all channels have a common reference potential.

DTS 1000353026 EN Version: R Status: RL (released | freigegeben | valide) printed: 13.05.2026

valvesgo.com

1.3. 4AO module (analogue output module)

Product properties	
Diagnostics	Short-circuit detection for voltage output (maximum 16 mA) Detection of an interruption in current input (open loop)
Safety	Protection against overvoltage (up to at least ± 30 V)
Electrical data	
Electrical variant	Current output or voltage output
Operating voltage	24 V DC ± 10 % (via backplane BPX3)
Conductor connection cross-section	0.20...1.5 mm² / AWG 16...24
Operating mode	0...20 mA 4...20 mA 0...10 V 0...5 V 0...2 V
Loop impedance	< 900 Ω for current output
Accuracy	± 0.1 % FSR Temperature coefficient: 14 ppm FSR/K Zero-scale error: + 0.22 % FSR
Maximum module current consumption	30 mA
Maximum current per output channel	50 mA at 900 Ω load and current output (with smaller load the current also decreases)
Galvanic isolation	For system bus on backplane, no separation between the inputs, all channels have a common reference potential.

1.4. 8DI module (digital input module)

Product properties	
Diagnostics	Open-circuit detection with 2-wire sensors, short-circuit detection with 3-wire sensors
Safety	Protection against overvoltage (up to at least ± 30 V)
Electrical data	
Electrical variant	2-wire sensor, 3-wire sensor, mechanical limit switches (all inputs can be configured as frequency inputs)
Operating voltage	24 V DC ± 10 % (via backplane BPX3)
Conductor connection cross-section	0.20...1.5 mm² / AWG 16...24
Switching threshold	V_{OFF} = 0...5 V V_{ON} = 10...30 V
Input current of V_{ON}, typically 24 V DC	Maximum 5.7 mA per channel
Input type	Type1 and Type3 according to IEC 61131 - 2
Number of frequency inputs	8
Frequency input	Maximum up to 2.5 kHz
Input impedance	> 4 kΩ
Sampling time/sampling frequency	1 ms...4 s /0.25 Hz...1 kHz
Maximum sensor power supply	8× 30 mA
Maximum current consumption of module	30 mA
Galvanic isolation	No, all channels have a common reference potential.

DTS 1000353026 EN Version: R Status: RL (released | freigegeben | valide) printed: 13.05.2026

valvesgo.com

1.5. 8DO module (digital output module, P-switching)

Product properties	
Diagnostics	Short-circuit detection
Safety	Protection against overvoltage (up to at least ± 30 V)
Electrical data	
Electrical variant	Voltage output
Operating voltage	24 V DC ± 10 % (via backplane BPX3)
Conductor connection cross-section	0.20...1.5 mm² / AWG 16...24
Operating mode	ON/OFF Switching signal with preconfigured limit in ME43 PWM (pulse width modulation) PFM (pulse frequency modulation)
Clock frequency	20 kHz configurable
Maximum AUX Power current consumption	8 × 750 mA
Maximum module current consumption	30 mA
Galvanic isolation	For system bus on backplane, no separation between the inputs, all channels have a common reference potential.

1.6. 8DO module: digital output Liquid Dosing Open Loop

Product properties	
Diagnostics	Short-circuit detection
Safety	Protection against overvoltage (up to at least ± 30 V)
Electrical data	
Electrical variant	Voltage output
Operating voltage	24 V DC ± 10 % (via backplane BPX3)
Conductor connection cross-section	0.20...1.5 mm² / AWG 16...24
Operating mode	ON/OFF Switching signal with preconfigured limit in ME43 PWM (pulse width modulation) PFM (pulse frequency modulation) Impulse (switching for a defined high-resolution pulse time) Dosing (switching based on taught-in dosing quantity)
Clock frequency	20 kHz configurable
Maximum AUX Power current consumption	8 × 750 mA
Maximum module current consumption	30 mA
Galvanic isolation	For system bus on backplane, no separation between the inputs, all channels have a common reference potential.

DTS 1000353026 EN Version: R Status: RL (released | freigegeben | valide) printed: 13.05.2026

valvesgo.com

2. Approvals and conformities

2.1. General notes

- The approvals and conformities listed below must be stated when making enquiries. This is the only way to ensure that the product complies with all required specifications.
- Not all available variants can be supplied with the below mentioned approvals or conformities.

2.2. Conformity

In accordance with the Declaration of Conformity, the product is compliant with the EU Directives.

2.3. Standards

The applied standards which are used to demonstrate compliance with the EU Directives are listed in the EU-Type Examination Certificate and/or the EU Declaration of Conformity.

2.4. North America (USA/Canada)

Approval	Description
c UL us LISTED	**Optional: UL Listed for the USA and Canada** The products are UL Listed for the USA and Canada according to: • UL 61010-1 (ELECTRICAL EQUIPMENT FOR MEASUREMENT, CONTROL, AND LABORATORY USE – Part 1: General Requirements) • CAN/CSA-C22.2 No. 61010-1

DTS 1000353026 EN Version: R Status: RL (released | freigegeben | valide) printed: 13.05.2026

valvesgo.com

valvesgo.com

3. Dimensions

3.1. 3 I/O modules on 3-fold backplane mounted on gateway Type ME43

Note:
Dimensions in mm

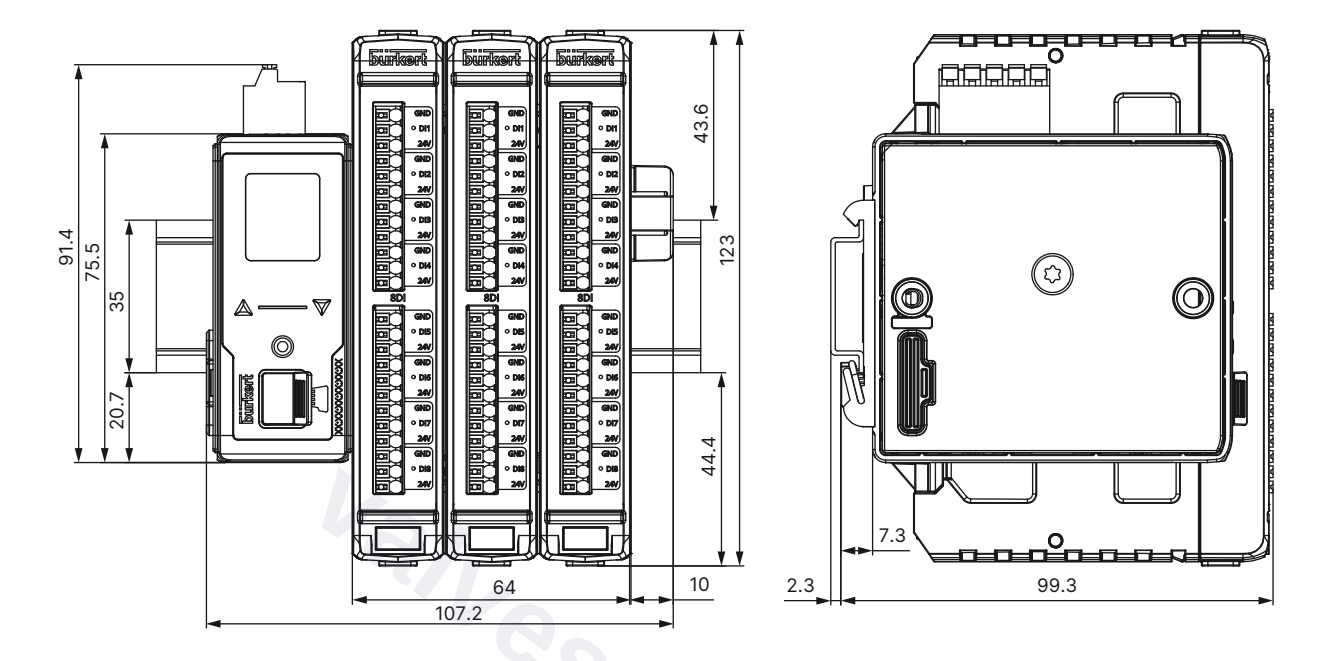

3.2. I/O module

Note:
Dimensions in mm

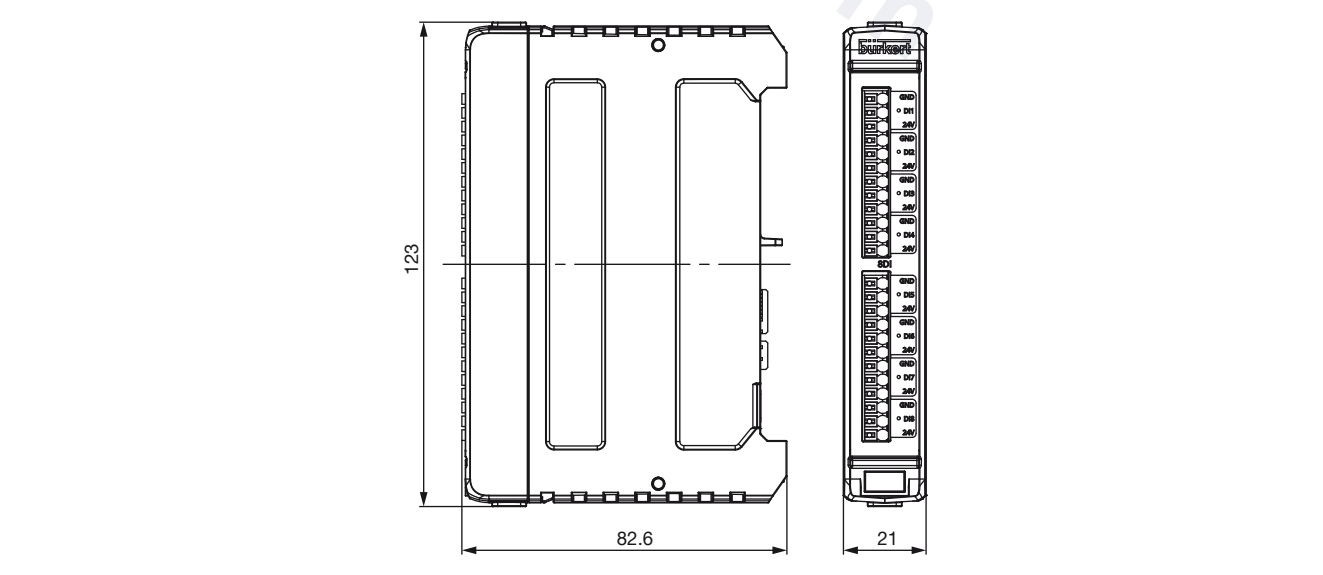

DTS 1000353026 EN Version: R Status: RL (released | freigegeben | valide) printed: 13.05.2026

valvesgo.com

3.3. 3-fold backplane

Note:
Dimensions in mm

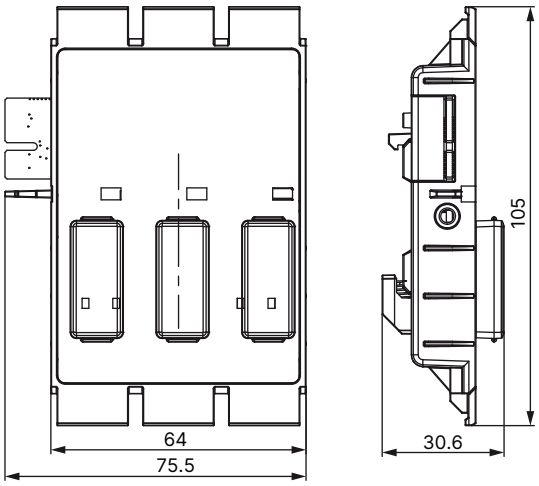

valvesgo.com

DTS 1000353026 EN Version: R Status: RL (released | freigegeben | valide) printed: 13.05.2026

valvesgo.com

4. Device/Process connections

4.1. Electrical assignment and circuit diagram for 4AI module

The AUX Power connection is used for the power supply of the AI channels. A second AUX Power connection can be used to supply another module.

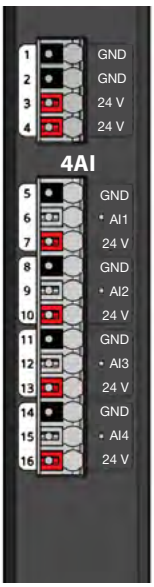

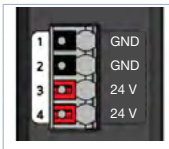

Pin assignment for AUX Power	Outer circuitry
GND	Ground
GND	Ground
24 V	AUX power supply voltage 24 V ⎓ ± 10 %
24 V	AUX power supply voltage 24 V ⎓ ± 10 %

Pin assignment for analogue inputs	Outer circuitry
GND	Ground
AI1...AI4	Analogue input +
24 V	Supply voltage output 24 V

Circuit diagram:

Internally powered (sensor is supplied via this module)

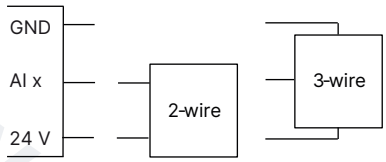

Externally powered (sensor is not supplied via module, but from another source)

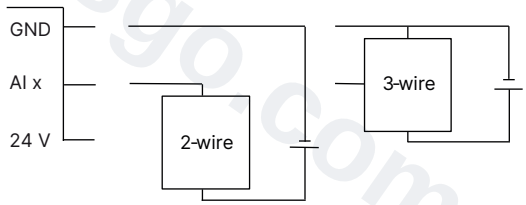

4.2. Electrical assignment and circuit diagram for 4AO module

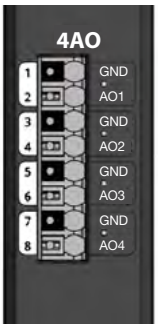

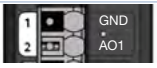

Pin assignment for analogue inputs	Outer circuitry
GND	Ground
AO1...AO4	Analogue output +

Circuit diagram:

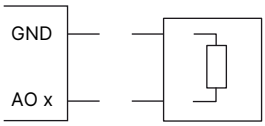

DTS 1000353026 EN Version: R Status: RL (released | freigegeben | valide) printed: 13.05.2026

valvesgo.com

4.3. Electrical assignment and circuit diagram for 8DI module

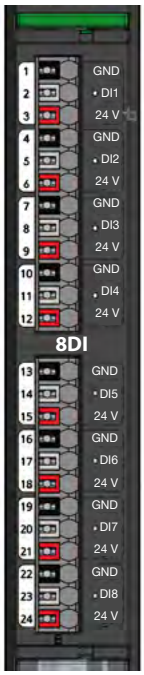

Pin assignment of analogue inputs	Outer circuitry
GND	Ground
DI1...DI8	Digital input
24 V	Power supply output 24 V

Circuit diagram:

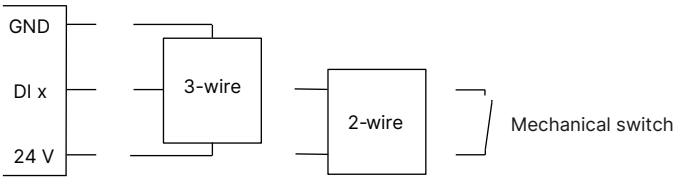

4.4. Electrical assignment and circuit diagram for 8DO module/8DO module Liquid Dosing Open Loop

The AUX Power connection is is used for the power supply of the DO channels. A second AUX-Power connection can be used to supply another module.

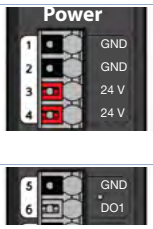

Pin assignment for AUX Power	Outer circuitry
GND	Ground
GND	Ground
24 V	AUX power supply voltage 24 V ⎓ ± 10 %
24 V	AUX power supply voltage 24 V ⎓ ± 10 %

Pin assignment of digital outputs	Outer circuitry
GND	Ground
DO1...DO8	Digital output +

Circuit diagram:

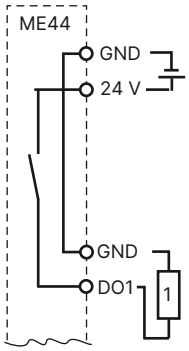

DTS 1000353026 EN Version: R Status: RL (released | freigegeben | valide) printed: 13.05.2026

valvesgo.com

5. Product design and assembly

5.1. Product features

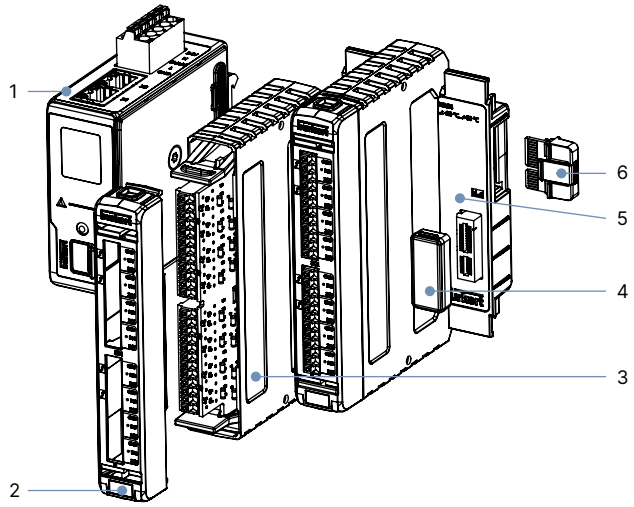

No.	Designation
1	Fieldbus gateway ME43
2	Connection panel ME44
3	I/O module ME44
4	Cover for module slot of backplane
5	Backplane (3-fold) BPX3
6	Terminating resistor

6. Ordering information

6.1. Bürkert eShop

Bürkert eShop – Easy ordering and quick delivery

You want to find your desired Bürkert product or spare part quickly and order directly? Our online shop is available for you 24/7. Sign up and enjoy all the benefits.

Order online now

6.2. Bürkert product filter

Bürkert product filter – Get quickly to the right product

You want to select products comfortably based on your technical requirements?
Use the Bürkert product filter and find suitable articles for your application quickly and easily.

Try out our product filter

DTS 1000353026 EN Version: R Status: RL (released | freigegeben | valide) printed: 13.05.2026

valvesgo.com

6.3. Ordering chart

Description	Article no. [1.)]
8 x digital outputs: 8DO module – Liquid Dosing Open Loop (LDO) (ME44)	20047149
8 x digital inputs: 8DI module (ME44)	354316
8 x digital outputs: 8DO module (ME44)	354317
4 x analogue inputs: 4AI module (ME44)	354321
4 x analogue outputs: 4AO module (ME44)	354325
Backplane System Connect Type BPX3	307510

1.) Each Article no. including UL approval and CE conformity

6.4. Ordering chart accessories

Description	Article no.
Termination resistor (directly pluggable)	303833
Power supply unit Phoenix Class2 (Type 1573), 85...240 V AC/24 V DC, 1.25 A, NEC Class 2 (UL 1310)	772438
Power supply unit for standard rail (Type 1573), 100...240 V AC/24 V DC, 1 A, NEC Class 2 (UL 1310)	772361
Power supply unit for standard rail (Type 1573), 100...240 V AC/24 V DC, 2 A, NEC Class 2 (UL 1310)	772362
Power supply unit for standard rail (Type 1573), 100...240 V AC/24 V DC, 4 A	772363
Micro-SD card	774087
büS stick set 1 (incl. cable (M12), stick with integrated terminating resistor, power supply and software) [1.)]	772426
büS stick set 2 (incl. cable (M12), stick with integrated terminating resistor [1.)]	772551
Bürkert Communicator Software	**Type 8920**

1.) For space reasons, M12 individual push-in connectors may not be suitable for simultaneous use on the same side as a Y distributor. Use a commercially available covered cable in this case.

DTS 1000353026 EN Version: R Status: RL (released | freigegeben | valide) printed: 13.05.2026

valvesgo.com

valvesgo.com