bürkert
FLUID CONTROL SYSTEMS

Servo-assisted 2/2-way piston valve

- Servo-assisted and compact piston valve with diameter of up to DN 13
- Vibration-resistant , screwed coil system
- Energy-saving double coil technology with kick and drop variant
- Safe opening with hard-coupled piston system
- Explosion proof variants

Product variants described in the data sheet may differ from the product presentation and description.

Can be combined with

Type 2518
Cable plug,
form A according to
DIN EN 175301-803

Type 2509
Cable plug,
form A according to
DIN EN 175301 - 803

Type description

The 6240 valve is a servo-assisted piston valve. The stopper and plunger guiding tube are welded together to enhance pressure resistance and leak-tightness. Various seal material combinations are available depending on the application. The housing design and surface quality enable maximum flow rates. The coils are moulded with chemically resistant epoxy. An optional sliding ring bearings increases the life cycle with dry gases. To reduce power consumption in operation, coils with Kick and Drop electronics assembly (double coil technology) are available.

valvesgo.com

DTS 1000089730 EN Version: AL Status: RL (released | freigegeben | valide) printed: 01.07.2026

© Christian Bürkert GmbH & Co. KG, Subject to alteration

valvesgo.com

Table of contents

1. General technical data 4

2. Circuit functions 5

3. Approvals and conformities 5

3.1. General notes 5
3.2. Conformity 5
3.3. Standards 5
3.4. Explosion protection 6
3.5. North America (USA/Canada) 7
3.6. Foods and beverages/Hygiene 7
3.7. Others 7
Oxygen 7
Fuel gases 7

4. Materials 8

4.1. Bürkert resistApp 8
4.2. Material specifications 8
Standard variant 8
High pressure variant up to 250 bar or 160 bar – DN 6 9
High pressure variant up to 250 bar – DN 12 9
Steam variant (NA67) – DN 13 10

5. Dimensions 11

5.1. Standard variant 11
5.2. High pressure variant up to 250 bar or 160 bar – DN 6 12
5.3. High pressure variant up to 250 bar – DN 12 13
5.4. Variant for self-service car wash up to 160 bar – Type 8820 - 6240 14
5.5. ATEX/IECEx variant (PX58, PX38 and PX39) 15
5.6. DN 13 variant 16
5.7. Flange variant (FK01 and FK13) 17
Complete valve 17
Flange connection diagram 18

6. Performance specifications 18

6.1. Power consumption 18
6.2. Ambient temperatures with Kick and Drop coils 19

7. Product accessories 19

7.1. Cable glands for ATEX/IECEX terminal box 19
7.2. Special tool to turn the terminal box 19

8. Ordering information 20

8.1. Bürkert eShop 20
8.2. Bürkert product filter 20
8.3. Bürkert Product Enquiry Form 20
8.4. Ordering chart standard variant 20
8.5. Ordering chart high temperature variant 21
8.6. Ordering chart increased pressure range (MW06) 21
8.7. Ordering chart variant DIN EN 161 automatic shut-off valves for gas burners 22
8.8. Ordering chart high pressure variant DN 6 – pressure ranges up to 160 bar 22
8.9. Ordering chart high pressure variant DN 6 – pressure ranges up to 250 bar 23
8.10. Ordering chart high pressure variant DN 12 – pressure range up to 250 bar 23

DTS 1000089730 EN Version: AL Status: RL (released | freigegeben | valide) printed: 01.07.2026

valvesgo.com

8.11. Ordering chart variant self-service car wash 160 bar – Type 8820 - 6240 24
8.12. Ordering chart steam variant DN 13....24
8.13. Ordering chart ATEX/IECEx cable variant....25
Standard variant....25
High pressure variant up to 250 bar or 160 bar 25
8.14. Ordering chart ATEX/IECEx terminal box variant 26
Standard variant....26
High pressure variant up to 250 bar or 160 bar 26
8.15. Ordering chart accessories....27
Cable plug Type 2518, form A according to DIN EN 175301 - 803 27
Cable plug Type 2509, form A according to DIN EN 175301 - 803....27
Cable glands for ATEX/IECEx terminal box 28
Mounting bracket....28

DTS 1000089730 EN Version: AL Status: RL (released | freigegeben | valide) printed: 01.07.2026

valvesgo.com

valvesgo.com

1. General technical data

Product properties	
Dimensions	Further information can be found in chapter "5. Dimensions" on page 11.
Material	
Body	Brass, stainless steel 1.4404 / 316L
Coil	Epoxy
Pressure	
Nominal pressure standard variant	40 bar
Nominal pressure high pressure variant	PN14: 140 bar PN16: 160 bar PN20: 200 bar PN25: 250 bar PN35: 350 bar
Burst pressure standard variant	> 300 bar for flanged and threaded housings
Burst pressure high pressure variant	> 1250 bar for threaded housings (≥PN16)
Orifice	DN 6, DN 12, DN 13 (steam variant)
Circuit function	A and B Further information can be found in chapter "2. Circuit functions" on page 5.
Thermal insulation class of solenoid coil	Epoxy coil class H
Performance data	
Duty cycle	100 % continuous operation
Switching time [1.)]	
Standard variant DN 6	Opening: 10...20 ms Closing: 40...50 ms
Standard variant DN 12	Opening: 20...40 ms Closing: 80...100 ms
Steam variant DN 13	Opening: 80...100 ms Closing: 200...300 ms
High pressure variant	Opening: 100...200 ms Closing: 300...600 ms
Electrical data	
Operating voltage	24 V DC, 24 V 50 Hz, 24 V 60 Hz, 110 V 50 Hz, 120 V 60 Hz, 230 V 50 Hz, 240 V 60 Hz (further voltages on request)
Power consumption	Further information can be found in chapter "6.1. Power consumption" on page 18.
Voltage tolerance	± 10 %
Medium data	
Operating medium [2.)]	Neutral gases and liquids (e.g. compressed air, water, hydraulic oil, steam and hot mediums)
Medium temperature	**Seat seal/External seal**
Standard variant	FKM/FKM: - 10 °C...+ 140 °C EPDM/EPDM: - 30 °C...+ 120 °C PTFE/FKM: - 10 °C...+ 140 °C
High temperature variant	PTFE/PEEK DN 6: - 40 °C...+ 180 °C PTFE/PEEK DN 12: - 40 °C...+ 140 °C
Steam variant DN 13	FKM/FKM: 0 °C...+ 140 °C
Approval DIN EN 161 (PO17)	NBR/NBR (PO17): - 10 °C...+ 80 °C
High pressure variant up to 250 bar or 160 bar	PCTFE/FKM: - 10 °C...+ 80 °C PCTFE/EPDM: - 30 °C...+ 80 °C PCTFE/PEEK: - 40 °C...+ 80 °C
Viscosity	Max. 21 mm^2/s (21 cSt)

DTS 1000089730 EN Version: AL Status: RL (released | freigegeben | valide) printed: 01.07.2026

valvesgo.com

valvesgo.com

Product connections	
Electrical connection	• Plug contacts according to DIN EN 175 301 - 803 form A for cable plug **Type 2518** ▶. Further information can be found in chapter "Cable plug Type 2518, form A according to DIN EN 175301 - 803" on page 27. • Plug contacts according to DIN EN 175 301 - 803 form A for cable plug **Type 2509** ▶. Further information can be found in chapter "Cable plug Type 2509, form A according to DIN EN 175301 - 803" on page 27.
Port connections	G ¼, G ⅜, G ½, NPT ¼, NPT ⅜, NPT ½ (Rc on request), steam variant DN 13 also in G ¾
Approvals and conformities	
Degree of protection	IP65 with cable plug **Type 2518** ▶ NEMA 4X with cable plug **Type 2509** ▶ with stainless steel variants (other variants on request)
Explosion protection	Further information can be found in chapter "3.4. Explosion protection" on page 6.
North America (USA/Canada)	Further information can be found in chapter "3.5. North America (USA/Canada)" on page 7.
Foods and beverages/Hygiene	Further information can be found in chapter "3.6. Foods and beverages/Hygiene" on page 7.
Others	Further information can be found in chapter "3.7. Others" on page 7.
Environment and installation	
Installation position	As required, preferably with actuator upright
Ambient temperature	Max. + 55 °C Max. + 70 °C with Kick and Drop coil [3.)]

1.) Measurement at + 20 °C, 6 bar at the valve outlet, opening: pressure build-up 0...90 %, closing: pressure reduction 100...10 %
2.) Medium resistance according to material combination
3.) The temperature specifications correspond to the specified switchable differential pressures. Higher temperatures are possible on request, depending on the differential pressure, duty cycle and number of switching operations Further information can be found in chapter "6.2. Ambient temperatures with Kick and Drop coils" on page 19.

2. Circuit functions

Symbol	Description
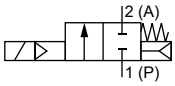	**Circuit function A (CF A)** 2/2-way solenoid valve Servo-controlled Normally closed
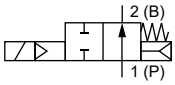	**Circuit function B (CF B)** 2/2-way solenoid valve Servo-controlled Normally open

3. Approvals and conformities

3.1. General notes

- The approvals and conformities listed below must be stated when making enquiries. This is the only way to ensure that the product complies with all required specifications.
- Not all available variants can be supplied with the below mentioned approvals or conformities.

3.2. Conformity

In accordance with the Declaration of Conformity, the product is compliant with the EU Directives.

3.3. Standards

The applied standards which are used to demonstrate compliance with the EU Directives are listed in the EU-Type Examination Certificate and/or the EU Declaration of Conformity.

DTS 1000089730 EN Version: AL Status: RL (released | freigegeben | valide) printed: 01.07.2026

valvesgo.com

3.4. Explosion protection

Approval	Description
	Optional: Explosion protection according to category 2 (zone 1/21) Ex marking of the components according to the following table:

Coil Type AC10	Coil Type AC19
Coil with cable outlet	
ATEX: EPS 18 ATEX 1232 X II 2G Ex mb IIC T4 Gb II 2D Ex mb IIIC T130 °C Db **IECEx:** IECEx EPS 18.0110 X Ex mb IIC T4 Gb Ex mb IIIC T130 °C Db	**ATEX:** EPS 16 ATEX 1072 X II 2G Ex mb IIC T4 Gb II 2D Ex mb IIIC T130 °C Db **IECEx:** IECEx EPS 16.0030 X II 2G Ex mb IIC T4 Gb II 2D Ex mb IIIC T130 °C Db
Coil with terminal box	
ATEX: EPS 18 ATEX 1232 X II 2G Ex eb mb IIC T4 Gb II 2D Ex mb tb IIIC T130 °C Db **IECEx:** IECEx EPS 18.0110 X Ex eb mb IIC T4 Gb Ex mb tb IIIC T130 °C Db	**ATEX:** EPS 16 ATEX 1072 X II 2G Ex eb mb IIC T4 Gb II 2D Ex mb tb IIIC T130 °C Db **IECEx:** IECEx EPS 16.0030 X II 2G Ex eb mb IIC T4 Gb II 2D Ex mb tb IIIC T130 °C Db

Optional: Explosion protection according to category 3 (zone 2/22)

Ex marking of the components according to the following table:

Coil Type AC10	Coil Type AC19
Coil with plug contacts form A and cable plug Type 2509	
ATEX: EPS 21 ATEX 1234 X II 3G Ex ec IIC T4 Gc II 3D Ex tc IIIC T130 °C Dc **IECEx:** IECEx EPS 21.0078 X Ex ec IIC T4 Gc Ex tc IIIC T130 °C Dc	**ATEX:** EPS 22 ATEX 1136 X II 3G Ex ec IIC T3 Gc II 3D Ex tc IIIC T200 °C Dc **IECEx:** IECEx EPS 22.0018 X Ex ec IIC T3 Gc Ex tc IIIC T200 °C Dc

DTS 1000089730 EN Version: AL Status: RL (released | freigegeben | valide) printed: 01.07.2026

valvesgo.com

3.5. North America (USA/Canada)

Approval	Description
UL LISTED	**Optional: UL Listed for the USA (valid for valves)** The valves are UL Listed for the USA according to: • UL 429 (electrically operated valves)
c UL us LISTED SOLENOID FOR USE IN HAZARDOUS LOCATIONS E504714	**Optional: UL Hazardous Locations – Explosion Protection (valid for coils)** UL Listed for Hazardous Locations for USA and Canada Class I, Zone 1 Class I, Division 2, Group A, B, C and D Class II + III, Division 2, Group F and G
	Optional: UL Recognized for the USA (valid for valves) The valves are UL Recognized for the USA according to: • UL 429 (electrically operated valves)
	Optional: CSA for Canada (valid for valves) The valves are CSA approved for Canada according to: • CSA 139 (electrically operated valves)

3.6. Foods and beverages/Hygiene

Conformity	Description
FDA	**FDA – Code of Federal Regulations (valid for the variable code PL02, PL03)** All wetted materials are compliant with the Code of Federal Regulations published by the FDA (Food and Drug Administration, USA) according to the manufacturer's declaration.
	EC Regulation 1935/2004 of the European Parliament and of the Council (valid for the variable code PL01, PL02) All wetted materials are compliant with EC Regulation 1935/2004/EC according to the manufacturer's declaration.

3.7. Others

Oxygen

Conformity	Description
O_2	**Optional: Suitability for oxygen (valid for the variable code NL02)** The products are suitable for use with gaseous oxygen, according to the manufacturer's declaration.

Fuel gases

Conformity	Description
CE	**Fuel gases (valid for the variable code PO17)** The products comply with: • Regulation (EU) 2016/426 – Appliances burning gaseous fuels and • DVGW DIN EN 161 (Automatic shut-off valves for gas burners and gas appliances), class B
DVGW	**DIN EN 549:2023 - 07 certification** The wetted valve seals are compliant with DIN EN 549:2023 - 07 (Rubber materials for seals and diaphragms for gas appliances and gas equipment) for medium temperatures of - 10 °C...+ 80 °C.

DTS 1000089730 EN Version: AL Status: RL (released | freigegeben | valide) printed: 01.07.2026

valvesgo.com

4. Materials

4.1. Bürkert resistApp

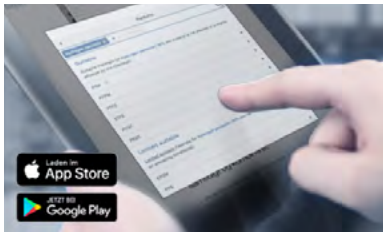

Bürkert resistApp – Chemical resistance chart

You want to ensure the reliability and durability of the materials in your individual application case? Verify your combination of media and materials on our website or in our resistApp.

Start chemical resistance check

4.2. Material specifications

Standard variant

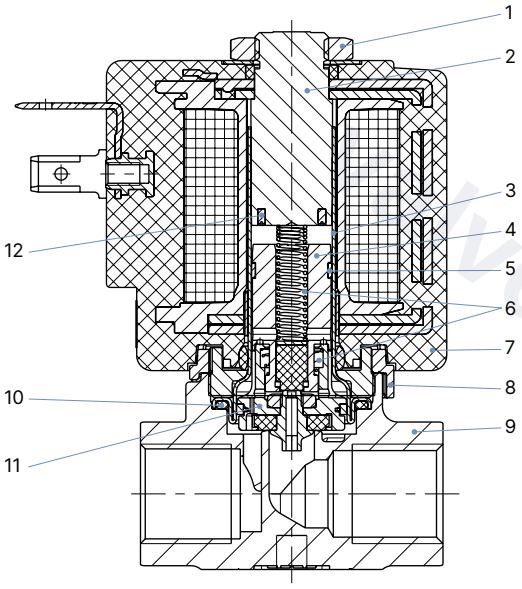

No.	Element	Material
1	Nut	Steel (surface finish thick film passivated) (Brass variant) Stainless steel 1.4305 PTFE (Stainless steel variant)
2	Stopper	Stainless steel 1.4113/434 [1.)]
3	Armature guide tube	Stainless steel 1.4303/305 [1.)]/308 [1.)]
4	Core	Stainless steel 1.4113/434 [1.)]
5	Guide ring	PTFE coal-filled
6	Springs	Stainless steel 1.4310/301 [1.)]
7	Coil	Epoxy
8	Safety lock	PPS
9	Body	Brass/stainless steel 1.4404/316L [1.)] (CF3M)
10	Seal facing outwards	FKM/EPDM/PEEK (high temperature variant)
11	Piston complete	Brass/stainless steel 1.4305/303 [1.)] Stainless steel PEEK PTFE coal-filled FKM/EPDM/PTFE (PTFE for high temperature and PTFE/FKM for high pressure variants)
12	Shading ring	Copper/silver

1.) Material designation according to AISI

DTS 1000089730 EN Version: AL Status: RL (released | freigegeben | valide) printed: 01.07.2026

valvesgo.com

High pressure variant up to 250 bar or 160 bar – DN 6

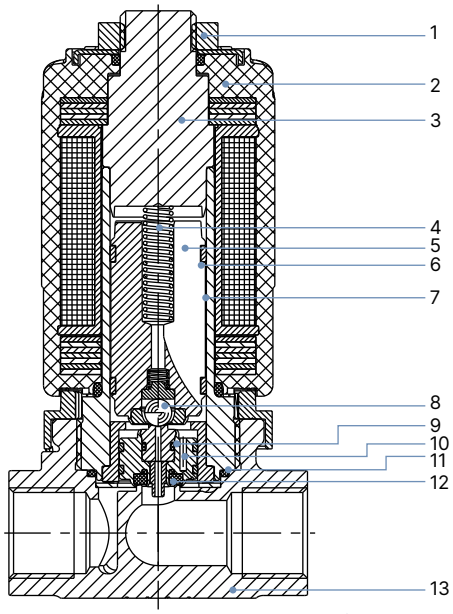

No.	Element	Material
1	Nut	Stainless steel 1.4305/303 [1.)]
2	Coil	Epoxy
3	Stopper	Stainless steel 1.4523/316 [1.)]
4	Spring	Stainless steel 1.4310/301 [1.)]
5	Core coupling	Stainless steel 1.4113/434 [1.)], 1.4305/303 [1.)]
6	Glide ring	PTFE coal-filled
7	Guide tube	Stainless steel 1.4571/316 Ti [1.)]
8	Core seal	Ceramic ball
9	Piston coupling	Stainless steel 1.4305/303 [1.)], PEEK, PTFE coal-filled
10	Piston guide	Stainless steel 1.4305/303 [1.)]
11	Seal	FKM, EPDM
12	Seat seal	PCTFE
13	Body	Stainless steel 1.4404/316L [1.)] (CF3M)

1.) Material designation according to AISI

High pressure variant up to 250 bar – DN 12

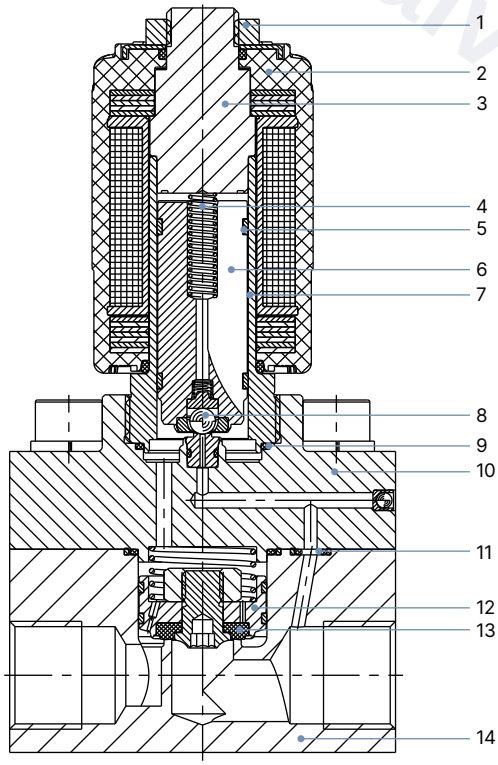

No.	Element	Material
1	Nut	Stainless steel 1.4305/303 [1.)] PTFE coated
2	Coil	Epoxy
3	Stopper	Stainless steel 1.4523/316 [1.)]
4	Spring	Stainless steel 1.4310/301 [1.)]
5	Glide ring	PTFE coal-filled
6	Core coupling	Stainless steel 1.4113/434 [1.)], 1.4305/303 [1.)]
7	Guide tube	Stainless steel 1.4571/316 Ti [1.)]
8	Core seal	Ceramic ball
9	Outer seal	FKM, EPDM
10	Flange coupling	Stainless steel 1.4404/316L (CF3M), PEEK, FKM/EPDM
11	Outer seal	FKM, EPDM
12	Piston coupling	Stainless steel 1.4305/303 [1.)], PTFE coal-filled
13	Seat seal	PCTFE
14	Body	Stainless steel 1.4404/316L (CF3M)

1.) Material designation according to AISI

DTS 1000089730 EN Version: AL Status: RL (released | freigegeben | valide) printed: 01.07.2026

valvesgo.com

Steam variant (NA67) – DN 13

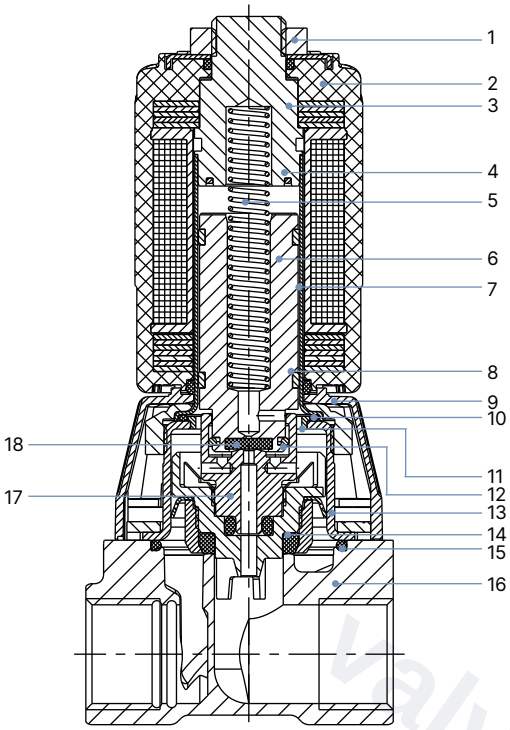

No.	Element	Material
1	Nut	Stainless steel 1.4305/303 [1.)]
2	Coil	Epoxy
3	Stopper	Stainless steel 1.4113/434 [1.)]
4	Shading ring	Silver
5	Spring	Stainless steel 1.4310/301 [1.)]
6	Core	Stainless steel 1.4113/434 [1.)]
7	Guide tube	Stainless steel 1.4303/305 [1.)]/308 [1.)]
8	Glide ring	PTFE coal filled
9	Cover	PA6
10	Seal	FKM
11	Support ring	PPS Fortron
12	Coupling ring	PEEK
13	Holding cap	Stainless steel 1.4301/304 [1.)]
14	Seat gasket	FKM
15	Outer seal	FKM
16	Body	Brass, stainless steel 1.4408/316 [1.)]
17	Piston coupling	Stainless steel 1.4401/316 [1.)], PPS Fortron, PTFE, PEEK, FKM
18	Core seal	FKM

1.) Material designation according to AISI

DTS 1000089730 EN Version: AL Status: RL (released | freigegeben | valide) printed: 01.07.2026

valvesgo.com

valvesgo.com

5. Dimensions

5.1. Standard variant

Note:
Dimensions in mm

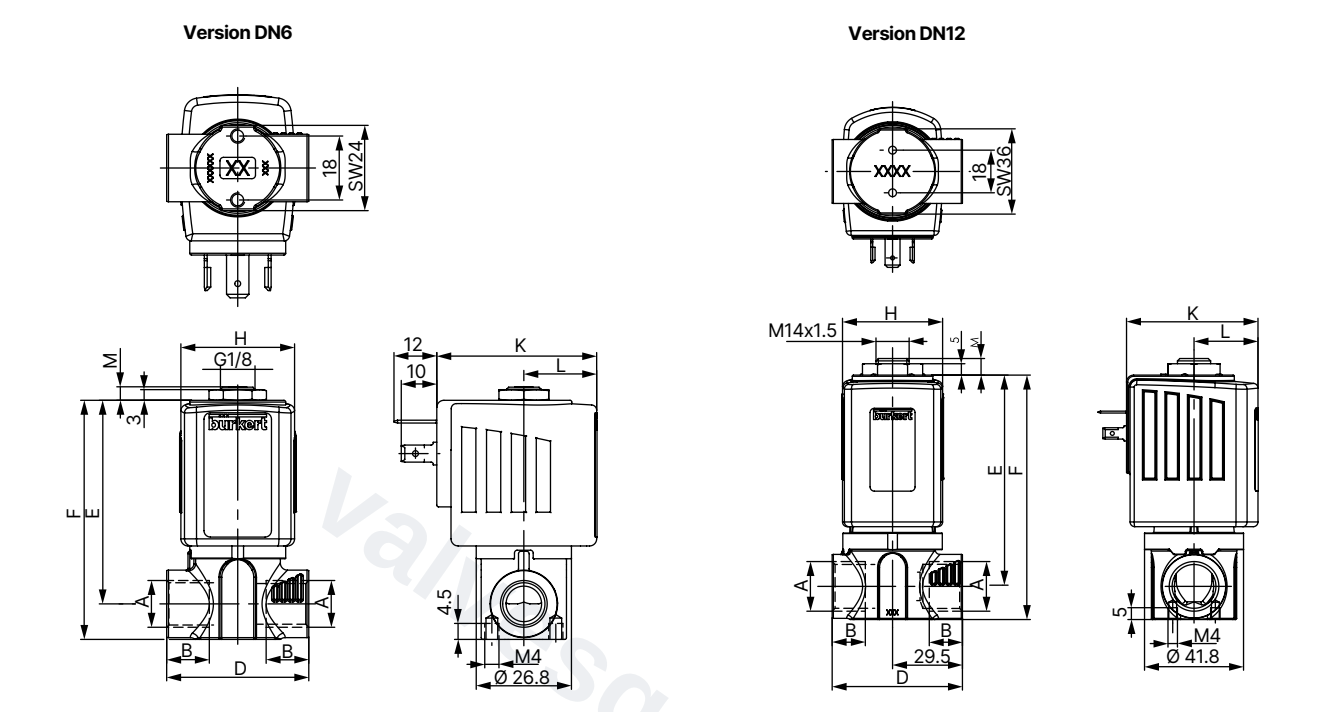

A (body connection)	B	D	E	F	M	H	K	L
DN 6								
G ¼	12	40	57.3	67.3	3.7	32	45	20.5
NPT ¼	10							
RC ¼	9.7							
G ⅜	12	50	58.3	70.3				
NPT ⅜	10.3							
RC ⅜	10.1							
G ¼	12	40	57.3	67.3	3.7	40	51	23.5
NPT ¼	10							
RC ¼	9.7							
G ⅜	12	50	58.3	70.3				
NPT ⅜	10.3							
RC ⅜	10.1							
DN 12								
G ½	14	55	89	103	7.5	42	55.5	27
NPT ½	13.7							
RC ½	13.2							

DTS 1000089730 EN Version: AL Status: RL (released | freigegeben | valide) printed: 01.07.2026

valvesgo.com

5.2. High pressure variant up to 250 bar or 160 bar – DN 6

Note:
Dimensions in mm

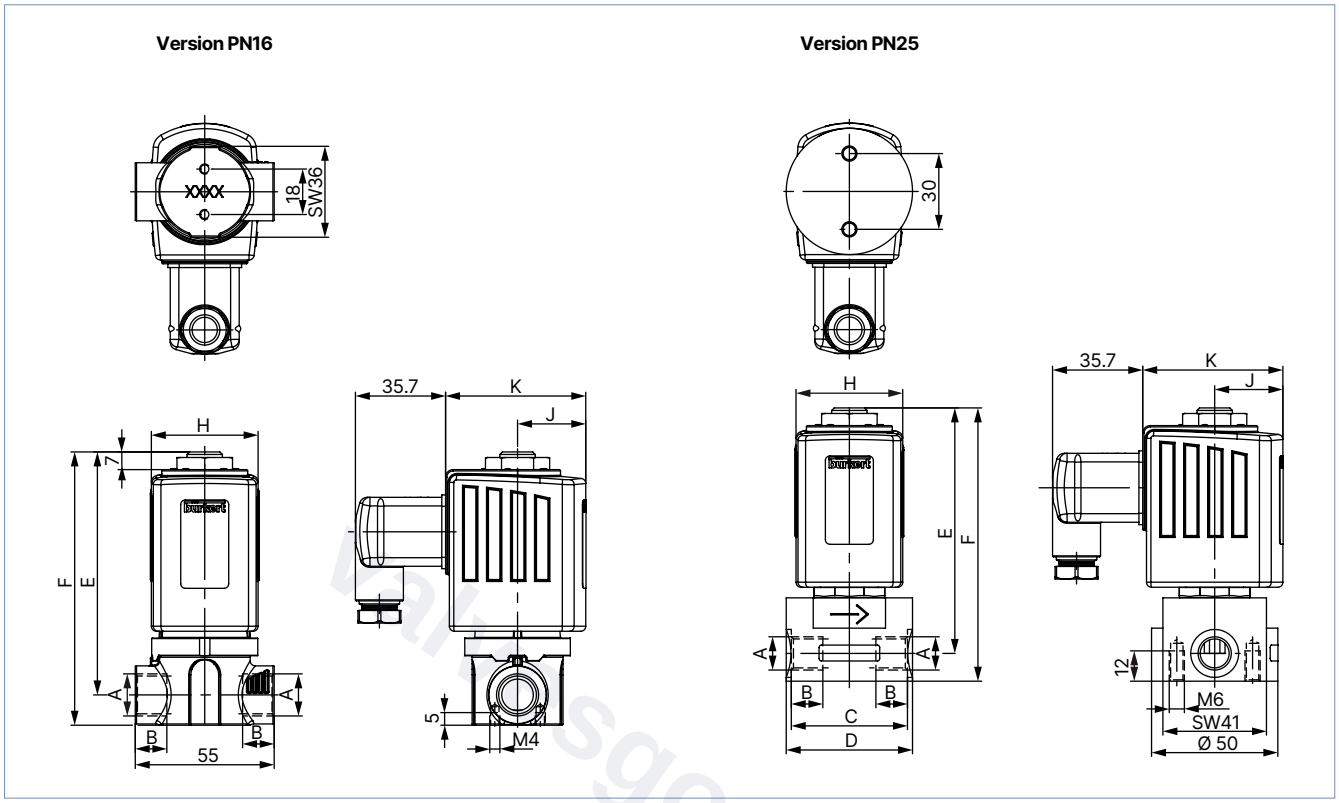

Coil size	H	J	K
K	42	27	55.5
L	65	37.5	72

Variant 160 bar			
A (body connection)	**B**	**E**	**F**
G ¼	13	95.2	105.2
NPT ¼	10		
G ⅜	12	96.2	108.2
NPT ⅜	10.3		

Variant 250 bar					
A (body connection)	**B**	**C**	**D**	**E**	**F**
G ¼	13	46	Ø 50	97.2	108.2
NPT ¼	10				
G ⅜	12.5	44	44.4	98.7	111.2
NPT ⅜	10.3				

DTS 1000089730 EN Version: AL Status: RL (released | freigegeben | valide) printed: 01.07.2026

valvesgo.com

5.3. High pressure variant up to 250 bar – DN 12

Note:
Dimensions in mm

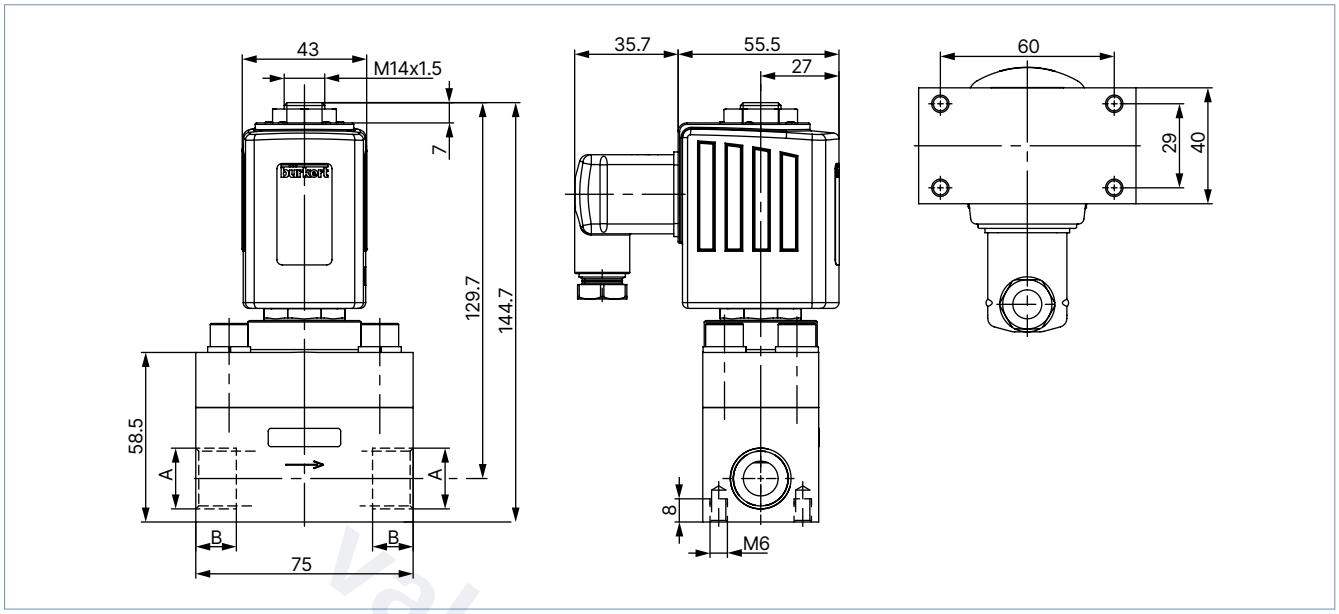

A (body connection)	B
G ½	14
NPT ½	13.7

DTS 1000089730 EN Version: AL Status: RL (released | freigegeben | valide) printed: 01.07.2026

valvesgo.com

5.4. Variant for self-service car wash up to 160 bar – Type 8820 - 6240

Note:
Dimensions in mm

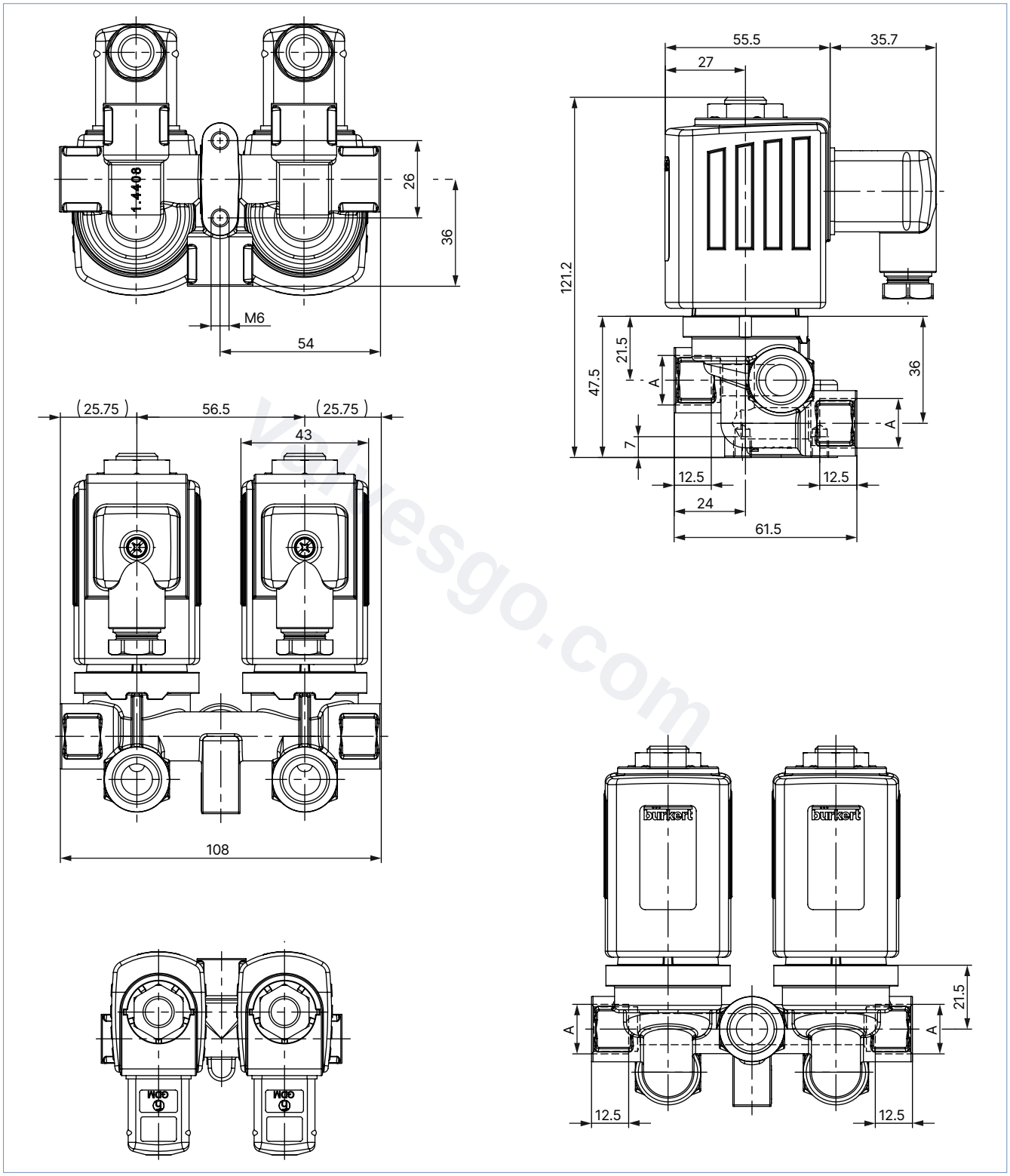

Variant	A
AH40	G ¼
AH37	G ⅜

DTS 1000089730 EN Version: AL Status: RL (released | freigegeben | valide) printed: 01.07.2026

valvesgo.com

5.5. ATEX/IECEx variant (PX58, PX38 and PX39)

Note:
Dimensions in mm

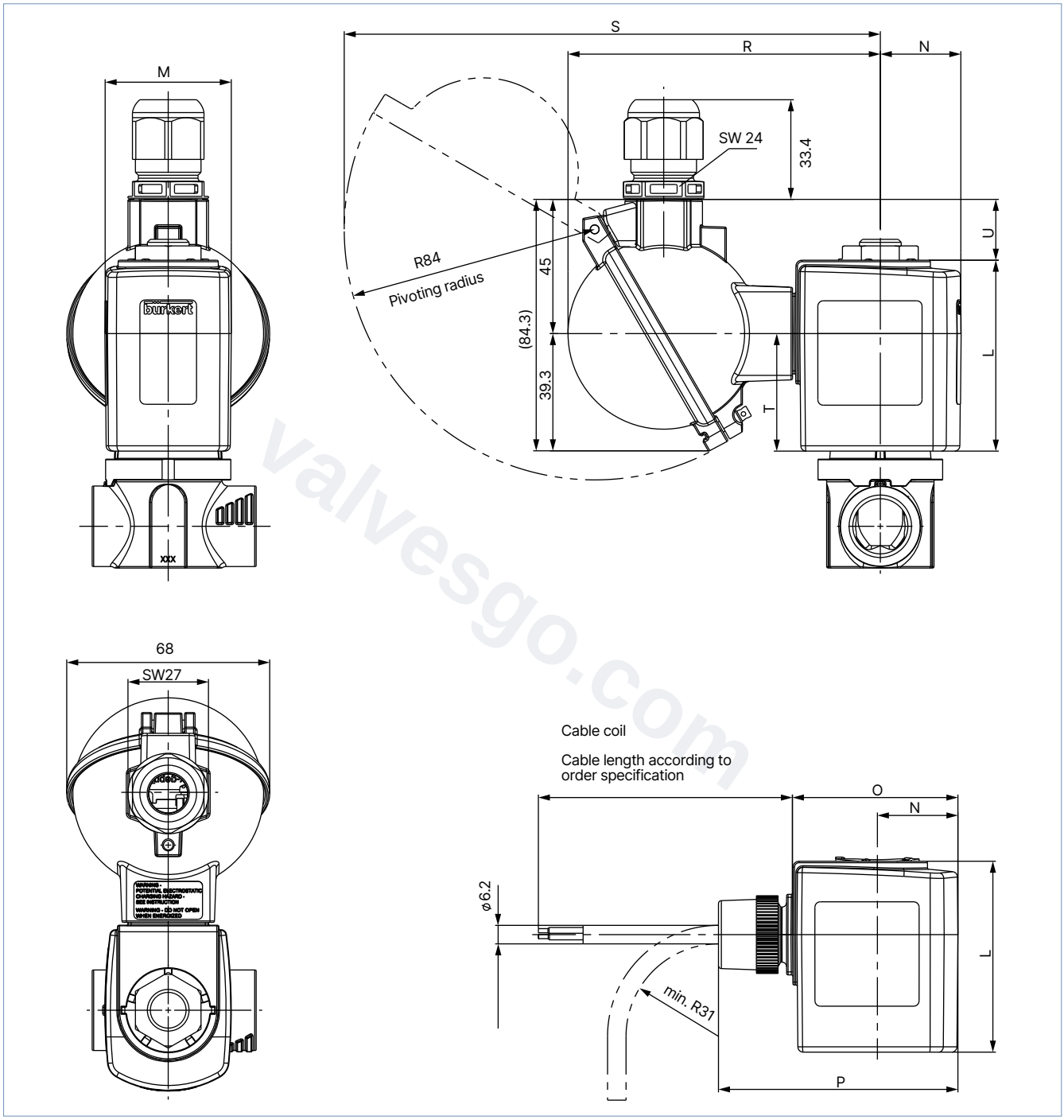

Var. Code	Coil size	M	N	O	P	L	R	S	T	U
PX58	6	40	23.5	52	74.8	41.3	102.8	177.5	26	29.7
PX38	K	42	27	55.5	80.3	64	104.8	179.8	39.4	20.4

DTS 1000089730 EN Version: AL Status: RL (released | freigegeben | valide) printed: 01.07.2026

valvesgo.com

5.6. DN 13 variant

Note:

- Dimensions in mm
- The dimensions F1 and G1 apply to G thread.
- The dimensions F2 and G2 apply to NPT thread.
- The dimensions F3 and G3 apply to Rc thread.

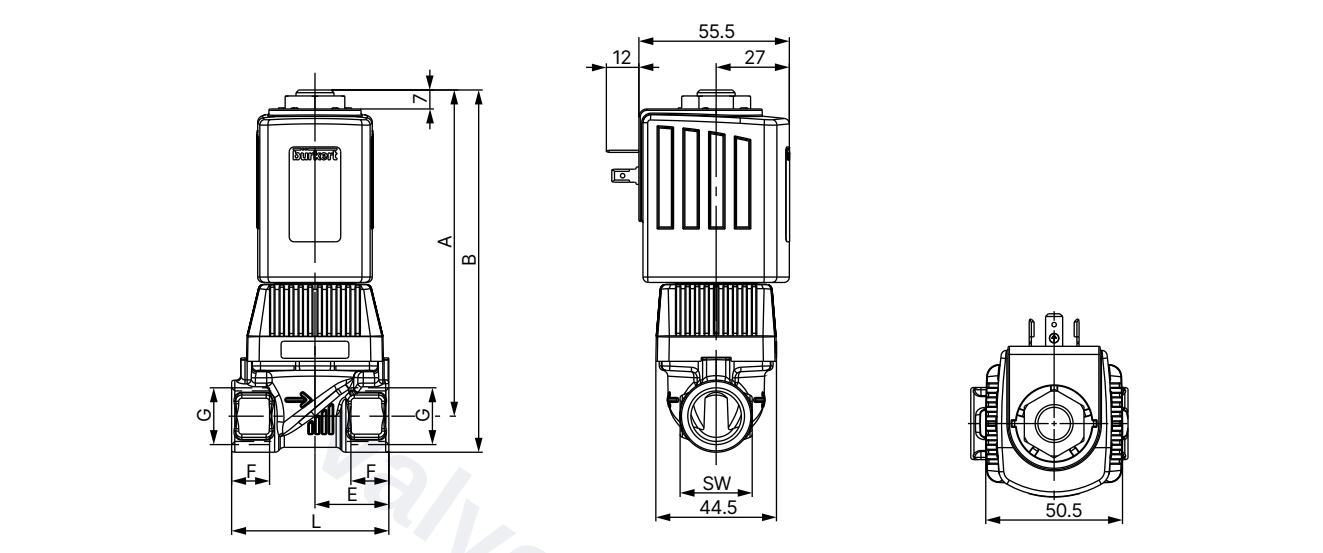

Material	DN	A	B	E	G		NPT		RC		L	SW
					F1	G1	F2	G2	F3	G3		
Brass	13	120.35	133.85	27.25	14	G ½	13.7	NPT ½	13.2	Rc ½	58	27
Stainless steel	13	120.35	133.85	32.5	14	G ½	13.7	NPT ½	13.2	Rc ½	65	27
Brass and stainless steel	13	122.35	138.35	32.5	16	G ¾	14	NPT ¾	14.5	Rc ¾	65	32

DTS 1000089730 EN Version: AL Status: RL (released | freigegeben | valide) printed: 01.07.2026

valvesgo.com

5.7. Flange variant (FK01 and FK13)

Complete valve

Note:
Dimensions in mm

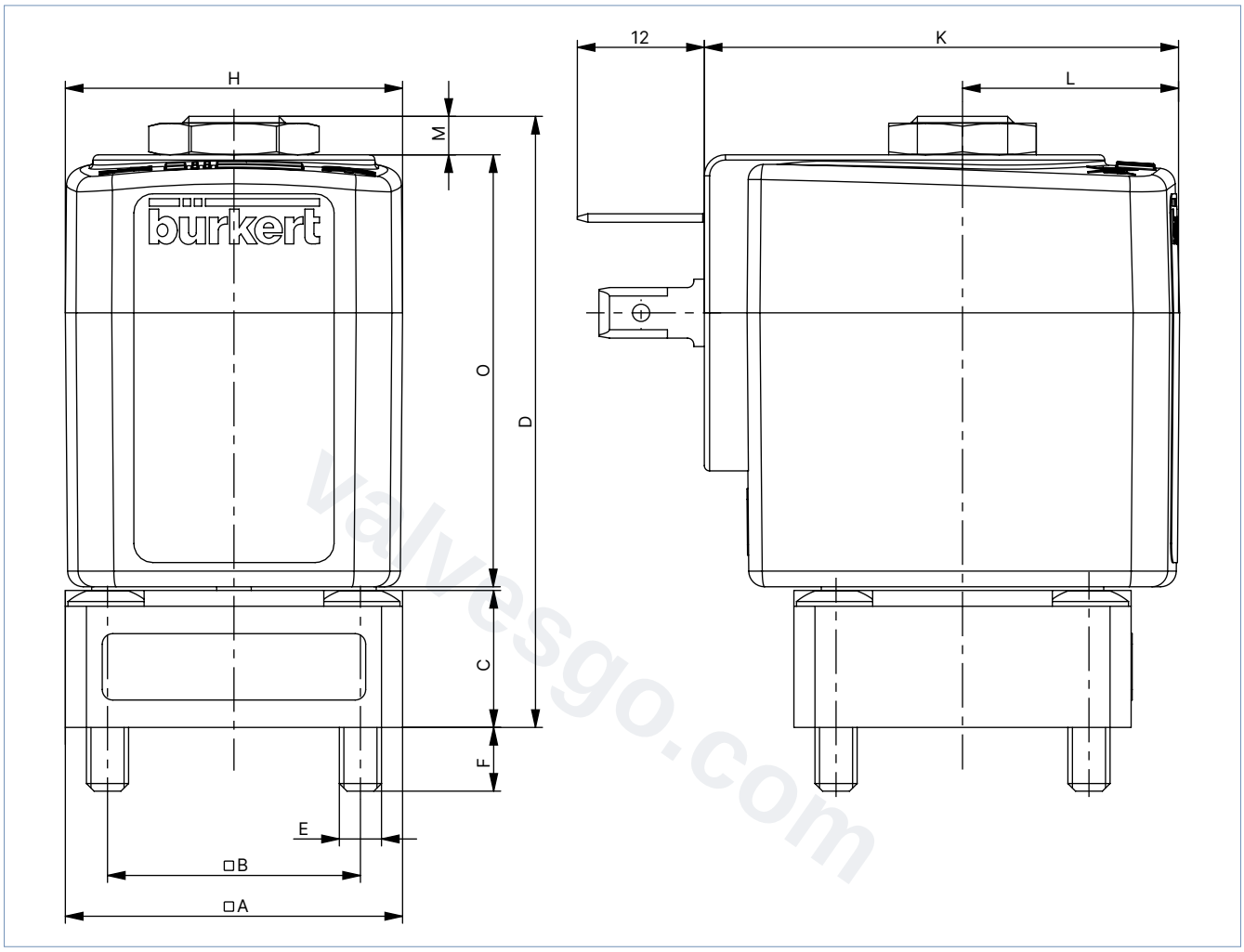

DN	Port connection	A	B	C	D	E	F
6	FK01	32	24	13	58	M4	6
12	FK13	45	33	21	96.2	M6	6.7

Coil size	H	L	K	O	M
5	32	20.5	45	41	3.7
6	40	23.5	51		
K	42	27	55.5	64	7

DTS 1000089730 EN Version: AL Status: RL (released | freigegeben | valide) printed: 01.07.2026

valvesgo.com

Flange connection diagram

Note:

- Dimensions in mm
- P = Inlet, A = Outlet
- The flow openings (P) of the valve body and connection block must be arranged one above the other in order to achieve the K_V value specified in the data sheet. If this is not the case, minor restrictions in the K_V value may occur.
- The specified thread depths of the drilled holes are intended exclusively for connection blocks made of brass and stainless steel. When using other materials, such as aluminium or plastic, the thread depths and screws must be adapted accordingly to suit the respective material.

Connection contour FK01	Connection contour FK13
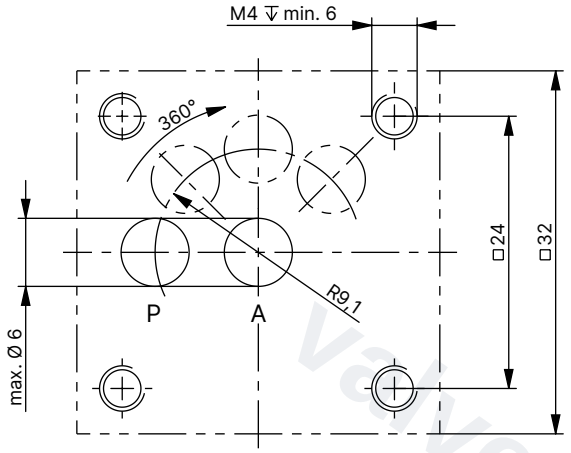	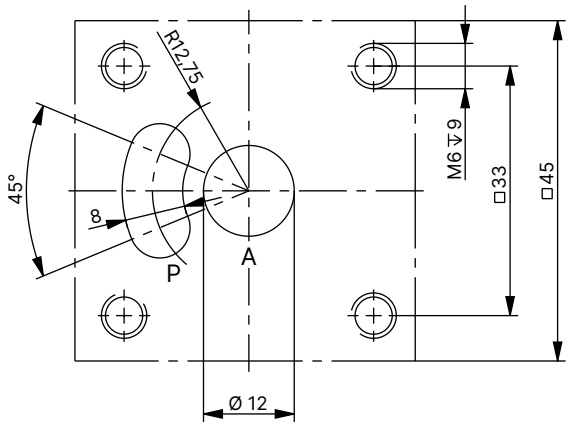

6. Performance specifications

6.1. Power consumption

Note:
The Kick and Drop coil (AC/DC) features integrated electronics for short-term power increase and decrease in double coil technology.

Coil size	AC			DC		Kick and Drop coil (AC/DC)		
	Inrush	Hold		Cold	Warm	Cold power Inrush power	Cold power Holding power	Warm power Holding power
[mm]	[VA]	[VA]	[W]	[W]	[W]	[W] 500 ms	[W]	[W]
32 (5)	32	18	8	12	10	–	–	–
40 (6)	40	23	10	14	12	20	2	2
40 (6) ATEX	–	–	–	9	7.5	–	–	–
42 (K)	150	37	16	21	16	85	8.5	7
42 (K) ATEX	–	–	–	15	12	44	6.5	5.5
65 (L)	–	–	–	28	21	–	–	–

DTS 1000089730 EN Version: AL Status: RL (released | freigegeben | valide) printed: 01.07.2026

valvesgo.com

6.2. Ambient temperatures with Kick and Drop coils

Coil type	Coil size	Maximum ambient temperatures[1.)] depending on the switching cycles per minute		
	[mm]	Performance	30 switching cycles/min.	1 switching cycle/min.
AC10	40 (6)	20 W / 2 W	Max. + 70 °C	Max. + 85 °C
		65 W / 7 W	Max. + 55 °C	Max. + 70 °C

Coil type	Coil size	Maximum ambient temperatures[1.)] depending on the switching cycles per minute		
	[mm]	Performance	10 switching cycles/min.	1 switching cycle/min.
AC19	42 (K)	44 W / 6.5 W	Max. + 65 °C	Max. + 70 °C
	42 (K) ATEX	44 W / 6.5 W	Max. + 65 °C	Max. + 70 °C
	42 (K)	85 W / 8.5 W	Max. + 55 °C	Max. + 60 °C

1.) The temperature specifications correspond to the specified switchable differential pressures. Higher temperatures are possible on request, depending on the differential pressure, duty cycle and number of switching operations

7. Product accessories

7.1. Cable glands for ATEX/IECEX terminal box

Note:
A polyamide cable gland is included in the scope of delivery. A nickel-plated brass variant can be ordered for a surcharge, see **"Cable glands for ATEX/IECEx terminal box" on page 28**.

Description	Ex approval		Dimensions	
	Certification	Identification		
Ex cable gland, nickel-plated brass, 6...13 mm 	PTB 04 ATEX 1112 X, IECEx PTB 13.0027X	II 2 G Ex e IIC Gb, II 2 D Ex tb IIIC Db IP68	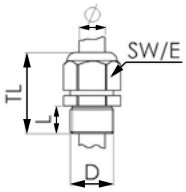	TL 29...37 mm L 6 mm D 20 mm SW 24 mm E 27 mm
Ex cable gland, polyamide, 7...13 mm 	PTB 13 ATEX 1015 X, IECEx PTB 13.0034X	II 2 G Ex e IIC Gb, II 2 D Ex tb IIIC Db IP68	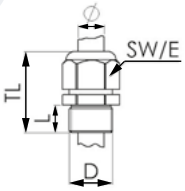	TL 36...45 mm L 10 mm D 20 mm SW 24 mm E 28 mm

7.2. Special tool to turn the terminal box

Note:
This special tool is not included in the scope of delivery of the valve, see **"Cable glands for ATEX/IECEx terminal box" on page 28**.

Description	Components of the set
Set SC02-AC10 	• Special tool • Service manual

DTS 1000089730 EN Version: AL Status: RL (released | freigegeben | valide) printed: 01.07.2026

valvesgo.com

8. Ordering information

8.1. Bürkert eShop

Bürkert eShop – Easy ordering and quick delivery

You want to find your desired Bürkert product or spare part quickly and order directly? Our online shop is available for you 24/7. Sign up and enjoy all the benefits.

Order online now

8.2. Bürkert product filter

Bürkert product filter – Get quickly to the right product

You want to select products comfortably based on your technical requirements?
Use the Bürkert product filter and find suitable articles for your application quickly and easily.

Try out our product filter

8.3. Bürkert Product Enquiry Form

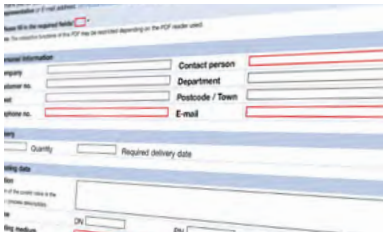

Bürkert Product Enquiry Form – Your enquiry quickly and compactly

Would you like to make a specific product enquiry based on your technical requirements? Use our Product Enquiry Form for this purpose. There you will find all the relevant information for your Bürkert contact. This will enable us to provide you with the best possible advice.

Fill out the form now

8.4. Ordering chart standard variant

Note:

- Please note that the cable plug must be ordered separately, see **"Cable plug Type 2518, form A according to DIN EN 175301-803" on page 27** or separate data sheet **Type 2518** ▶.
- Further variants with alternative voltages, NPT or RC internal thread, seal material EPDM/EPDM available on request.

Circuit function	Port connection	Orifice	K_v value water	Pressure range	Coil size	Article no.		
						024/DC	024/50	230/50
		[mm]	[m³/h]	[bar]	[mm]	[V/Hz]	[V/Hz]	[V/Hz]
G internal thread, seal material FKM/FKM								
CF A 2/2-way solenoid valve Servo-controlled Normally closed 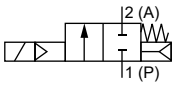	**Brass body**							
	G ¼	6.0	0.6	0...16	32	177800	177801	177802
	G ⅜	6.0	0.6	0...16	32	177803	177804	177805
	Stainless steel body							
	G ¼	6.0	0.6	0...16	32	177806	177807	177808
	G ½	12.0	2.2	0...16	42	238632	238633	238634

DTS 1000089730 EN Version: AL Status: RL (released | freigegeben | valide) printed: 01.07.2026

valvesgo.com

8.5. Ordering chart high temperature variant

Note:

- Please note that the cable plug must be ordered separately, see "Cable plug Type 2518, form A according to DIN EN 175301 - 803" on page 27 or separate data sheet **Type 2518** ▶.
- Further variants with alternative voltages, NPT or RC internal thread available on request.

Circuit function	Port connection	Orifice	K_V value water	Pressure range	Coil size	Article no.		
						024/DC	024/50	230/50
		[mm]	[m³/h]	[bar]	[mm]	[V/Hz]	[V/Hz]	[V/Hz]
G internal thread, stainless steel body, seal material PTFE/PEEK								
CF A 2/2-way solenoid valve Servo-controlled Normally closed 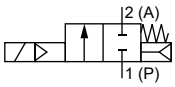	**Medium temperature - 40 °C...+ 180 °C**							
	G ¼	6.0	0.6	0...16	32	184739	184740	184741
	Medium temperature - 40 °C...+ 140 °C							
	G ½	12.0	2.2	0...25	42	238638	238639	238640

8.6. Ordering chart increased pressure range (MW06)

Note:

- Please note that the cable plug must be ordered separately, see "Cable plug Type 2518, form A according to DIN EN 175301 - 803" on page 27 or separate data sheet **Type 2518** ▶.
- Further variants with alternative voltages, NPT or RC internal thread available on request.

Circuit function	Port connection	Orifice	K_V value water	Pressure range		Coil size	Article no.		
				Liquids	Gases		024/DC	024/50	230/50
		[mm]	[m³/h]	[bar]	[bar]	[mm]	[V/Hz]	[V/Hz]	[V/Hz]
G internal thread, brass body, seal material PTFE/FKM									
CF A 2/2-way solenoid valve Servo-controlled Normally closed 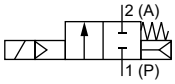	**Medium temperature - 40 °C...+ 180 °C**								
	G ¼	6.0	0.6	0...25	0...40	40	184742	184743	184744
	G ⅜	6.0	0.6	0...25	0...40	40	184745	184746	184747

DTS 1000089730 EN Version: AL Status: RL (released | freigegeben | valide) printed: 01.07.2026

valvesgo.com

8.7. Ordering chart variant DIN EN 161 automatic shut-off valves for gas burners

Note:
Further variants with alternative voltages, body material and connection combinations are available on request.

Circuit function	Port connection	Orifice	K_V value water	Pressure range Gases	Body material	Coil size	Article no. 024/DC	Article no. 024/50	Article no. 230/50
		[mm]	[m³/h]	[bar]	[bar]	[mm]	[V/Hz]	[V/Hz]	[V/Hz]
G internal thread, brass body, seal material NBR/NBR									
CF A 2/2-way solenoid valve Servo-controlled Normally closed 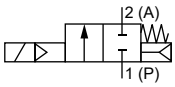	G ¼	6.0	0.6	0...5	Brass	32	253501	o. r.	287855
	G ½	12.0	2.2	0...5	Stainless steel	42	253502	o. r.	287438

o. r. = on request

8.8. Ordering chart high pressure variant DN 6 – pressure ranges up to 160 bar

Note:

- The Kick and Drop coil (AC/DC) features integrated electronics for short-term power increase and decrease in double coil technology.
- Further variants with alternative voltages, NPT or RC internal thread, seal materials are available on request.
- For the following table applies: Orifice 6.0 and K_V value water [m³/h] 0.75.
- Due to the wear-resistant PCTFE seat seals, a seat tightness of < 2 cm³/min (air + 20 °C) is guaranteed from a differential pressure of 20 bar or higher.

Circuit function	Port connection	Pressure difference range Water DC	Water AC	Oil DC	Oil AC	Air DC	Air AC	Coil size	Article no. 024/DC	Article no. 024/50	Article no. 230/50
		[bar]	[bar]	[bar]	[bar]	[bar]	[bar]	[mm]	[V/Hz]	[V/Hz]	[V/Hz]
G internal thread, stainless steel body, seal material PCTFE/FKM, cable plug with integrated rectifier for AC included in delivery											
CF A 2/2-way solenoid valve Servo-controlled Normally closed 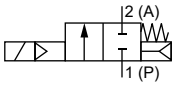	G ¼	1...100	1...100	1...80	1...80	1...100	1...100	42	300602	–	300603
	G ¼	–	1...90	–	1...60	–	1...90	42	–	318327	–
	G ⅜	1...120	1...120	1...80	1...80	1...120	1...120	42	323476	–	323477
	G ⅜	–	1...90	–	1...60	–	1...90	42	–	323478	–

– = not available

DTS 1000089730 EN Version: AL Status: RL (released | freigegeben | valide) printed: 01.07.2026

valvesgo.com

8.9. Ordering chart high pressure variant DN 6 – pressure ranges up to 250 bar

Note:

- The Kick and Drop coil (AC/DC) features integrated electronics for short-term power increase and decrease in double coil technology.
- Further variants with alternative voltages, NPT or RC internal thread, seal materials are available on request.
- For the following table applies: Orifice 6.0 and K_V value water [m³/h] 0.75.
- Due to the wear-resistant PCTFE seat seals, a seat tightness of < 2 cm³/min (air + 20 °C) is guaranteed from a differential pressure of 20 bar or higher.

Circuit function	Port connection	Pressure difference range						Coil size	Article no.		
		Water		Oil		Air			024/DC	024/ AC/DC	230/AC
		DC	AC	DC	AC	DC	AC				
		[bar]	[bar]	[bar]	[bar]	[bar]	[bar]	[mm]	[V/Hz]	[V/Hz]	[V/Hz]
G internal thread, stainless steel body, seal material PCTFE/FKM											
CF A 2/2-way solenoid valve Servo-controlled Normally closed 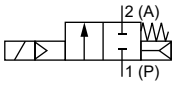	G ¼	1...230	–	1...200	–	1...250	–	65	319700	–	–
	G ¼	–	1...230	–	1...200	–	1...250	42 (Kick and Drop)	–	323479	323480
	G ⅜	1...230	1...120	1...200	–	1...250	–	65	323481	–	–
	G ⅜	–	1...230	–	1...200	–	1...250	42 (Kick and Drop)	–	323482	323483

– = not available

8.10. Ordering chart high pressure variant DN 12 – pressure range up to 250 bar

Note:

- Further variants with alternative voltages, NPT or RC internal thread, seal materials are available on request.
- For the following table applies: Orifice 12.0 and K_V value water [m³/h] 2.2.
- Due to the wear-resistant PCTFE seat seals, a seat tightness of < 2 cm³/min (air + 20 °C) is guaranteed from a differential pressure of 20 bar or higher.

Circuit function	Port connection	Pressure difference range						Coil size	Article no.		
		Water		Oil		Air			024/DC	024/50	230/50
		DC	AC	DC	AC	DC	AC				
		[bar]	[bar]	[bar]	[bar]	[bar]	[bar]	[mm]	[V/Hz]	[V/Hz]	[V/Hz]
G internal thread, stainless steel body, seal material PCTFE/FKM, cable plug with integrated rectifier for AC included in delivery											
CF A 2/2-way solenoid valve Servo-controlled Normally closed 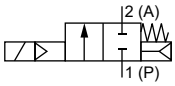	G ½	1...250	1...250	1...250	1...250	1...250	1...250	42	312895	–	314877
	G ½	1...250	1...250	1...200	1...200	1...250	1...250	42	–	323484	–
CF B 2/2-way solenoid valve Servo-controlled Normally open 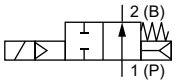	G ½	1...200	1...200	1...150	1...150	1...250	1...250	42	314875	323485	323486

– = not available

DTS 1000089730 EN Version: AL Status: RL (released | freigegeben | valide) printed: 01.07.2026

valvesgo.com

8.11. Ordering chart variant self-service car wash 160 bar – Type 8820 - 6240

Note:
Further variants with alternative voltages, NPT or RC internal thread available on request.

Circuit function	Port connection	Orifice single valve	K_V value water single valve	Pressure difference range	Coil size	Article no.	
						024/DC	230/50
		[mm]	[m³/h]	[bar]	[mm]	[V/Hz]	[V/Hz]
Seal material PCTFE/FKM							
CF A 2/2-way solenoid valve Servo-controlled Normally closed 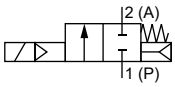	**Stainless steel body**						
	G ¼	6.0	0.75	1...120	42	333330	333331
	G ⅜	6.0	0.75	1...120	42	360692	320736

8.12. Ordering chart steam variant DN 13

Note:
Further variants with alternative voltages, NPT or RC internal thread available on request.

Circuit function	Port connection	Orifice	K_V value water	Pressure range steam	Coil size	Article no.	
						024/50	230/50
		[mm]	[m³/h]	[bar]	[mm]	[V/Hz]	[V/Hz]
Seal material FKM/FKM							
CF A 2/2-way solenoid valve Servo-controlled Normally closed 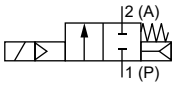	**Brass body**						
	G ½	13.0	3.3	0...4	42	315069	244912
	G ¾	13.0	3.3	0...4	42	315072	244915
	Stainless steel body						
	G ½	13.0	3.3	0...4	42	323434	323436
	G ¾	13.0	3.3	0...4	42	323437	323438

DTS 1000089730 EN Version: AL Status: RL (released | freigegeben | valide) printed: 01.07.2026

valvesgo.com

8.13. Ordering chart ATEX/IECEx cable variant

Standard variant

Note:

- The Kick and Drop coil (AC/DC) features integrated electronics for short-term power increase and decrease in double coil technology.
- Further variants with alternative voltages, NPT or RC internal thread, seal materials are available on request.

Circuit function	Port connection	Orifice	K_V value water	Pressure range	Coil size	Article no.	
						024 / AC/DC	230/AC
		[mm]	[m³/h]	[bar]	[mm]	[V/Hz]	[V/Hz]
G internal thread, seal material FKM/FKM							
CF A 2/2-way solenoid valve Servo-controlled Normally closed 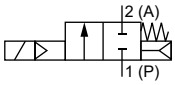	**Brass body**						
	G ¼	6.0	0.6	0...16	40	349315	349316
	G ⅜	6.0	0.6	0...16	40	349318	349320
	Stainless steel body						
	G ¼	6.0	0.6	0...16	40	349322	349324
	G ⅜	6.0	0.6	0...16	40	349326	349329
	G ½	12.0	2.2	0...10	42	380838	380844
	G ½	12.0	2.2	0...25	42 (Kick and Drop)	380841	380846

High pressure variant up to 250 bar or 160 bar

Note:

- The Kick and Drop coil (AC/DC) features integrated electronics for short-term power increase and decrease in double coil technology.
- Further variants with alternative voltages, NPT or RC internal thread, seal material EPDM/EPDM available on request.

Circuit function	Port connection	Orifice	K_V value water	Pressure difference range			Coil size	Article no.	
				Water	Oil	Air		024 / AC/DC	230/AC
		[mm]	[m³/h]	[bar]	[bar]	[bar]	[mm]	[V/Hz]	[V/Hz]
G internal thread, stainless steel body, seal material PCTFE/FKM									
CF A 2/2-way solenoid valve Servo-controlled Normally closed 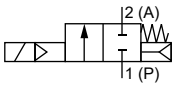	**Pressure rating up to 160 bar**								
	G ¼	6.0	0.6	1...160	1...120	1...160	42 (Kick and Drop)	380808	380810
	G ⅜	6.0	0.6	1...160	1...120	1...160	42 (Kick and Drop)	380812	380813
	Pressure rating up to 250 bar								
	G ½	12.0	2.2	1...200	1...150	1...250	42	380820	380825
	G ½	12.0	2.2	1...250	1...250	1...250	42 (Kick and Drop)	380823	380826
CF B 2/2-way solenoid valve Servo-controlled Normally open 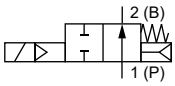	G ½	12.0	2.2	1...200	1...150	1...250	42 (Kick and Drop)	380849	380851

DTS 1000089730 EN Version: AL Status: RL (released | freigegeben | valide) printed: 01.07.2026

valvesgo.com

8.14. Ordering chart ATEX/IECEx terminal box variant

Standard variant

Note:

- The Kick and Drop coil (AC/DC) features integrated electronics for short-term power increase and decrease in double coil technology.
- Further variants with alternative voltages, NPT or RC internal thread, seal materials are available on request.

Circuit function	Port connection	Orifice	K_v value water	Pressure range	Coil size	Article no.	
						024 / AC/DC	230/AC
		[mm]	[m³/h]	[bar]	[mm]	[V/Hz]	[V/Hz]
G internal thread, seal material FKM/FKM							
CF A 2/2-way solenoid valve Servo-controlled Normally closed 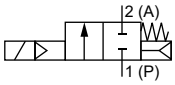	**Brass body**						
	G ¼	6.0	0.6	0...16	40	349314	349317
	G ⅜	6.0	0.6	0...16	40	349319	349321
	Stainless steel body						
	G ¼	6.0	0.6	0...16	40	349323	349325
	G ⅜	6.0	0.6	0...1.5	40	349327	349328
	G ½	12.0	2.2	0...10	42	380836	380843
	G ½	12.0	2.2	0...25	42 (Kick and Drop)	380840	380845

High pressure variant up to 250 bar or 160 bar

Note:

- The Kick and Drop coil (AC/DC) features integrated electronics for short-term power increase and decrease in double coil technology.
- Further variants with alternative voltages, NPT- or RC-internal thread, seal material PCTFE/EPDM are available on request.
- Due to the wear-resistant PCTFE seat seals, a seat tightness of < 2 cm³/min (air + 20 °C) is guaranteed from a differential pressure of 20 bar or higher.

Circuit function	Port connection	Orifice	K_v value water	Pressure difference range			Coil size	Article no.	
				Water	Oil	Air		024 / AC/DC	230/AC
		[mm]	[m³/h]	[bar]	[bar]	[bar]	[mm]	[V/Hz]	[V/Hz]
G internal thread, stainless steel body, seal material PCTFE/FKM									
CF A 2/2-way solenoid valve Servo-controlled Normally closed 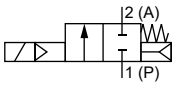	**Pressure rating up to up to 160 bar**								
	G ¼	6.0	0.6	1...160	1...120	1...160	42 (Kick and Drop)	380806	o. r.
	G ⅜	6.0	0.6	1...160	1...120	1...160	42 (Kick and Drop)	380811	o. r.
	Pressure rating up to up to 250 bar								
	G ½	12.0	2.2	1...200	1...150	1...250	42	380819	o. r.
	G ½	12.0	2.2	1...250	1...250	1...250	42 (Kick and Drop)	380821	o. r.
CF B 2/2-way solenoid valve Servo-controlled Normally open 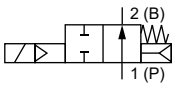	G ½	12.0	2.2	1...200	1...150	1...250	42 (Kick and Drop)	380848	380850

o. r. = on request

DTS 1000089730 EN Version: AL Status: RL (released | freigegeben | valide) printed: 01.07.2026

valvesgo.com

Further variants on request			
	Approval Further information can be found in chapter "3. Approvals and conformities" on page 5.		**Material** Seal: EPDM
	Process connection Flange connection acc. to DIN 2501 (DN 25...DN 50)		**Voltage** 042/50, further voltages on request

8.15. Ordering chart accessories

Cable plug Type 2518, form A according to DIN EN 175301 - 803

Note:

- Dimensions in mm
- For further variants see data sheet **Type 2518** ▶.

Cable plug	Dimensions	Variant	Voltage	Article no.
	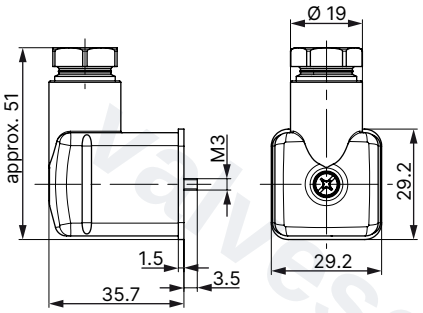	Without wiring (AC/DC)	0...250 V AC/DC	314802
		With LED (AC/DC)	12...24 V AC/DC	314812
		With LED and varistor (AC/DC)	12...24 V AC/DC	314820
		With rectifier, LED and varistor	12...24 V AC/DC	314816
		Without wiring (AC/DC) with silicone seal for higher ambient temperature, e.g. steam variant (NA07)	0...250 V AC/DC	361687

Cable plug Type 2509, form A according to DIN EN 175301 - 803

Note:

- Dimensions in mm
- Without wiring (standard)
- The cable plug Type 2509 meets the requirements of ATEX Cat. 3 GD in assembly with a Bürkert solenoid valve.
- The cable plug Type 2509 meets the requirements of UL Listed (UL 429) in assembly with a Bürkert solenoid valve.
- Refer to data sheet **Type 2509** ▶ for more information about the cable plug.

Cable plug	Dimensions	Variant	Voltage	Article no.
	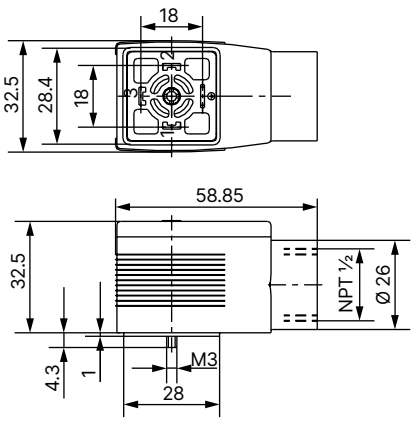	Without wiring	0...250 V AC/DC	137943

DTS 1000089730 EN Version: AL Status: RL (released | freigegeben | valide) printed: 01.07.2026

valvesgo.com

Cable glands for ATEX/IECEx terminal box

Note:

- A polyamide cable gland is included in the scope of delivery. A nickel-plated brass variant can be ordered for a surcharge.
- Refer to "7.1. Cable glands for ATEX/IECEX terminal box" on page 19 for more information about Ex cable glands.
- Refer to "7.2. Special tool to turn the terminal box" on page 19 for more information about special tool.

Description	Article no.
Ex cable gland, nickel-plated brass, 6...13 mm [1.)]	773278
Ex cable gland, polyamide, 7...13 mm [1.)]	773277
Set SC02-AC10: special tool [2.)] incl. service manual	293488

1.) Cable diameter
2.) Not included in the scope of delivery of the valve

Mounting bracket

Note:

- The mounting bracket, 2 cheese head screws M4×8 and 2 spring lock washers are included in the scope of delivery.
- The mounting bracket can be used for all standard and high-pressure variants DN 6 up to 160 bar including ATEX/IECEx option.
- The mounting bracket cannot be used for the DN 13 variant and high-pressure variants up to 250 bar as well as various special housings made of solid material.

Description	Article no.
Mounting bracket for Type 6020/6027/6240/6440 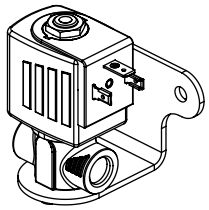	282304

DTS 1000089730 EN Version: AL Status: RL (released | freigegeben | valide) printed: 01.07.2026

valvesgo.com

valvesgo.com