bürkert
FLUID CONTROL SYSTEMS

MAN 1000701627 EN Version: B Status: RL (released | freigegeben) printed: 14.07.2026

Type 6240

2/2-way servo solenoid valve

Operating Instructions

valvesgo.com

MAN 1000701627 EN Version: B Status: RL (released | freigegeben) printed: 14.07.2026

valvesgo.com

We reserve the right to make technical changes without notice.
© Bürkert Werke GmbH & Co. KG 2015-2026
Technical documentation 2605/08_GBen_00805591_1005821195_18014399515466251 / Original DE

Table of contents

1 About this document 4
1.1 Symbols 4
1.2 Terms and abbreviations 5
1.3 Manufacturer 5
2 Safety 6
2.1 Intended use 6
2.2 Basic safety instructions 6
3 Technical data 8
3.1 Standards and directives 8
3.2 Type label 8
3.3 Usage conditions 8
4 Installation 10
4.1 Safety instructions 10
4.2 Flange variant installation 11
4.3 Solenoid installation 12
4.4 Electrical connection of cable plug 13
5 Maintenance, troubleshooting 15
5.1 Troubleshooting 15
6 Spare parts 16
7 Logistics 17
7.1 Transport and storage 17
7.2 Return 17
7.3 Disposal 17

MAN 1000701627 EN Version: B Status: RL (released | freigegeben) printed: 14.07.2026

valvesgo.com

valvesgo.com

1 About this document

The document is an important part of the product and guides the user to safe installation and operation. The information and instructions in this document are binding for the use of the product.

- Before using the product for the first time, read and observe the whole safety chapter.
- Before starting any work on the product, read and observe the respective sections of the document.
- Keep the document available for reference and give it to the next user.
- Contact the Bürkert sales office for any questions.

Further information concerning the product at Products.

- Enter the article number from the type label in the search bar.

The illustrations in these instructions may vary depending on the product variant.

1.1 Symbols

DANGER!

Warns of a danger that leads to death or serious injuries.

WARNING!

Warns of a danger that can lead to death or serious injuries.

CAUTION!

Warns of a danger that can lead to minor injuries.

NOTICE!

Warns of property damage on the product or the installation.

Indicates important additional information, tips and recommendations.

Refers to information in this document or in other documents.

- Indicates a step to be carried out.

✓ Indicates a result.

Menu Indicates a software user-interface text.

MAN 1000701627 EN Version: B Status: RL (released | freigegeben) printed: 14.07.2026

valvesgo.com

1.2 Terms and abbreviations

The terms and abbreviations are used in this document to refer to following definitions.

Product	Solenoid valve Type 6240

1.3 Manufacturer

Bürkert Fluid Control Systems

Christian-Bürkert-Str. 13–17

74653 Ingelfingen

GERMANY

The contact addresses are available at Contact.

Need more information or additional products?

- Explore the full range of products on our eShop.

valvesgo.com

MAN 1000701627 EN Version: B Status: RL (released | freigegeben) printed: 14.07.2026

valvesgo.com

2 Safety

2.1 Intended use

Improper use of the Type 6240 solenoid valve may be dangerous to people, nearby equipment and the environment.

- The device is designed for controlling, shutting off and dosing neutral media with a viscosity of up to 21 mm^2/s.
- With a properly connected and assembled cable plug, e.g. Bürkert Type 2518, the device complies with degree of protection IP65 in accordance with DIN EN 60529/ IEC 60529.
- For use, observe the authorised data, and the operating and usage conditions specified in the contract documents and operating instructions.
- Prerequisites for safe and trouble-free operation are correct transport, correct storage and installation as well as careful operation and maintenance.
- Only use the device as intended.

2.2 Basic safety instructions

These safety instructions do not take into account any incidents or events that may occur during installation, operation or maintenance.

Risk of injury from high pressure

- Before working on the system or device, switch off the pressure and vent/empty the lines.

Danger due to electrical voltage

- Before working on the device or the system, switch off the power supply and secure against reactivation.
- Observe the applicable accident prevention and safety regulations for electrical devices.

Risk of burns and fire due to hot device surface if device is in continuous operation

- Keep the device away from highly flammable substances and media and do not touch with bare hands.

Risk of injury from malfunctioning valves with alternating current (AC)

A seized core will cause the solenoid to overheat, which leads to functional failure.

- Monitor the working process for proper function.

Risk of short circuit/escape of medium due to leaking fittings

- Make sure valve seals are properly seated.
- Screw valve and connection lines together carefully.

General dangerous situations

To prevent injuries, observe the following:

MAN 1000701627 EN Version: B Status: RL (released | freigegeben) printed: 14.07.2026

valvesgo.com

valvesgo.com

- Do not make any internal or external changes. Secure the system/device against unintentional activation.
- Installation and maintenance must be performed by authorised technicians using the appropriate tools.
- The process must be restarted in a defined or controlled manner after an interruption in the power supply or pneumatic supply.
- Do not subject the body/housing to mechanical stress.
- For versions with ATEX approval, observe the safety instructions in the ATEX manual.
- Observe general engineering standards and rules.

MAN 1000701627 EN Version: B Status: RL (released | freigegeben) printed: 14.07.2026

valvesgo.com

3 Technical data

3.1 Standards and directives

This product complies with the legal requirements applicable at the time of placing on the market and has been developed and tested in accordance with the relevant European directives/regulations and harmonized standards. The conformity is documented and, if necessary, supported by evidence. The EU Declaration of Conformity can be found behind the respective type on the home page country.burkert.com

3.2 Type label

Please observe specifications on the type label.

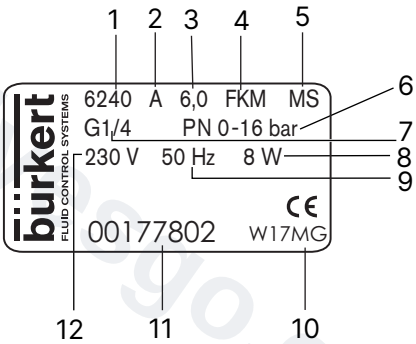

1	Type	2	Circuit function
3	Orifice	4	Sealing material
5	Body material	6	PN
7	Connection type	8	Power (tolerance ±10%)
9	Frequency	10	Manufacture code
11	Article number	12	Voltage

3.3 Usage conditions

Media	Neutral gases and liquids, technical vacuum
Ambient temperature	max. +55°C
Storage temperature	–40...+80 °C
Degree of protection	IP65 with cable plug
Operating duration	Unless otherwise specified on the type label, the solenoid actuator is suitable for continuous operation.

MAN 1000701627 EN Version: B Status: RL (released | freigegeben) printed: 14.07.2026

valvesgo.com

Seal material	Medium temperature
FKM	–10...+140 °C
EPDM	–30...+120 °C
PTFE, PEEK	–40...+140 °C (+180 °C for DN6)

Tab. 1: Media temperature depending on the seal material

Seal material	Medium temperature
PCTFE/FKM	–10...+80 °C (+120 °C for MX31)
PCTFE/EPDM	–30...+80 °C (+120 °C for MX31)
PTFE, PEEK	–40...+80 °C (+120 °C for MX31)

Tab. 2: Media temperature for high-pressure variant (code MX31/MX32) depending on the seal material:

Media	Seal material	Variable code	Medium temperature	Ambient temperature
Air Inert gas Steam	PTFE+EPDM (EA); EPDM+EPDM (AA); PTFE+FKM (EF); FKM+FKM (FF)	-	–30 °C...+140 °C	–30 °C...+55 °C
Water	PTFE+EPDM (EA); EPDM+EPDM (AA); PTFE+FKM (EF); FKM+FKM (FF)	-/NA67	0 °C...+100 °C	0 °C...+55 °C
Air Inert gas Steam	FKM+FKM (FF)	NA67	0 °C...+140 °C	–10 °C...+55 °C
Oil (no. 2)	PTFE+FKM (EF); FKM+FKM (FF)	-	–10 °C...+140 °C	–10 °C...+55 °C

Tab. 3: Temperatures for valves with UL/UR approval

Liquids and high differential pressure may cause high pressure surges.

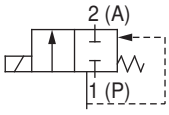	**Circuit function A** Solenoid valve, 2/2-way, servo-assisted, normally closed
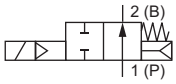 (only high-pressure variant DN12)	**Circuit function B** Solenoid valve, 2/2-way, servo-assisted, normally open

MAN 1000701627 EN Version: B Status: RL (released | freigegeben) printed: 14.07.2026

valvesgo.com

4 Installation

4.1 Safety instructions

DANGER!

Risk of injury from high pressure in the system

- Before loosening lines or valves, switch off the pressure and vent the lines.

DANGER!

Risk of injury from electric shock

- Before working on the device or the system, switch off the power supply and secure against reactivation.
- Observe the applicable accident prevention and safety regulations for electrical devices.

WARNING!

Risk of injury due to improper installation

- Installation must be carried out by authorised technicians only and with the appropriate tools.

WARNING!

Risk of injury from unintentional activation of the system and uncontrolled restart

- Secure the system against unintentional activation.
- Ensure a controlled restart after installation.

WARNING!

Leakage of medium through damaged connections

- Do not damage the sealing surfaces of the body connections.

WARNING!

Danger due to unsuitable fittings

- Only use fitting connections that fit together.

- Clear pipes of any dirt.
- Fit a dirt trap on a dirty medium before the valve inlet (mesh size 0.2...0.4 mm).
- According to the manufacturer, devices that are suitable for use with food should be flushed for 5 minutes prior to start-up.

Any installation position, preferably actuator face up.

NOTICE!

Breaking hazard

- Do not use the solenoid as a lever arm.

Ensure that the valve body is not installed twisted. Seal material must not get into the device.

MAN 1000701627 EN Version: B Status: RL (released | freigegeben) printed: 14.07.2026

valvesgo.com

- Seal pipe connections using an elastomer seal or PTFE tape. Ensure that seal material does not get into the device.
- Note the flow direction: from 1 → 2 (from P → A).
- Hold the device on the body using an open-end wrench and screw into the pipeline.

4.2 Flange variant installation

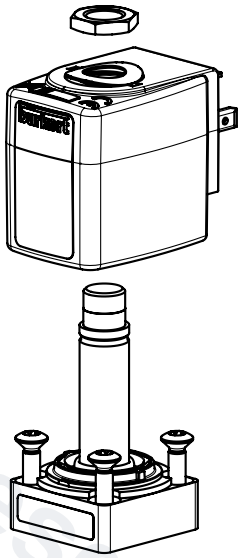

Fig. 1: Flange variant installation

- Unscrew the coil nut, which is fitted securely, and remove the coil.
- Remove the O-rings from their packaging and insert them into the grooves provided in the flange. When fitting, ensure that there is no damage to the O-rings.
- Place the valve on the connection housing. To achieve the Kv value specified in the data sheet, the inlet openings of the flange connection and connection housing must be aligned concentrically.
- Tighten the valve body bolts in a crosswise pattern. Ensure that the tightening torque specified in the table below is observed.
- Place the coil onto the valve assembly and secure it using the coil nut. See Solenoid installation [▸ 12]

NOTICE!

- Ensure that the O-rings on the valve body and the seal surfaces of the connection housing are not damaged during installation.

Variant	Nominal diameter DN	Tightening torque [Nm]	Screw
FK01	6	3	M4 × 18 A2-70
FK13	12	10	M6 × 25 A4-70

MAN 1000701627 EN Version: B Status: RL (released | freigegeben) printed: 14.07.2026

valvesgo.com

Connection contour DN6 FK01

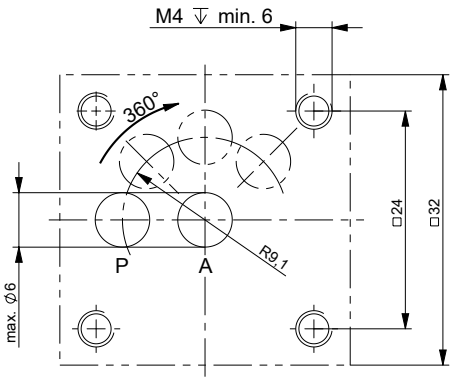

Connection contour DN12 FK13

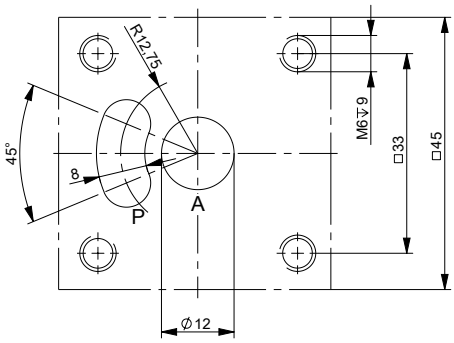

P = Inlet
A = Outlet

Fig. 2: Connection diagram for flange variants FK01 and FK13

4.3 Solenoid installation

WARNING!

Risk of injury due to escaping medium

Medium may leak if a firmly fastened nut is loosened.

- Do not continue to rotate firmly fastened nuts.

WARNING!

Risk of injury from electric shock

If there is no protective conductor function between the solenoid and the body, there is a risk of electric shock.

- The anti-twist device (plastic ring) must be inserted into the body pins during installation. It must not protrude over the octagonal nipple.
- Check the protective conductor function after installing the solenoid.

WARNING!

Overheating, risk of fire

Connecting the solenoid without a pre-installed valve will cause overheating and destroy the solenoid.

- Only connect the solenoid after the valve has been installed.

MAN 1000701627 EN Version: B Status: RL (released | freigegeben) printed: 14.07.2026

valvesgo.com

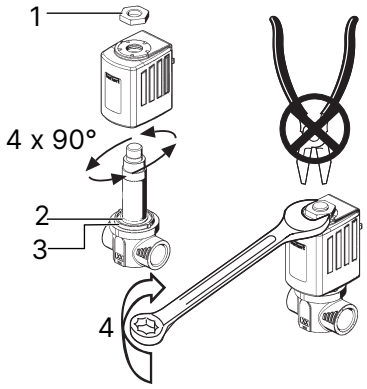

Fig. 3: Solenoid installation

1	Nut	2	O-Ring
3	Anti-rotation device (plastic ring)	4	Observe tightening torques in table

Type	DN	Tightening torque [Nm]
6240	6	5
6240	12	15
6240 NA67	13	15
6240 MX31 + MX32	6 to 12	15

Tab. 4: Tightening torques solenoid assembly

4.4 Electrical connection of cable plug

WARNING!

Risk of injury from electric shock

- Before working on the device or the system, switch off the power supply and secure against reactivation.
- Observe the applicable accident prevention and safety regulations for electrical devices.

WARNING!

Risk of injury from electric shock

Risk of electric shock if protective conductor not connected.

- Always connect the protective conductor.
- Check electrical continuity between solenoid and body.

- Screw cable plug tight (for approved types see data sheet), ensuring a maximum torque of 50 – 60 Ncm.
- Check that the valve seal is correctly seated.
- Connect protective conductor and check electrical continuity between solenoid and body.

MAN 1000701627 EN Version: B Status: RL (released | freigegeben) printed: 14.07.2026

valvesgo.com

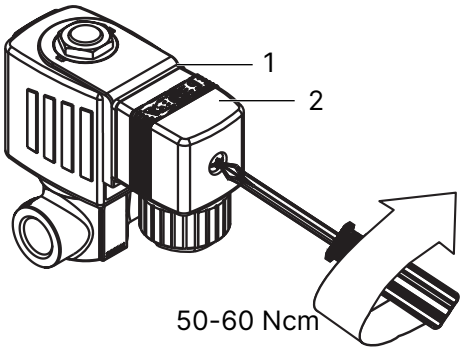

1	Approved cable plug, e.g. Type 2518 or other suitable cable plug in accordance with DIN EN 175301-803, form A	2	Seal

MAN 1000701627 EN Version: B Status: RL (released | freigegeben) printed: 14.07.2026

valvesgo.com

5 Maintenance, troubleshooting

WARNING!

Risk of injury due to improper maintenance work

- Maintenance may be carried out by authorised technicians only and with the appropriate tools.

WARNING!

Risk of injury from unintentional activation of the system and uncontrolled restart

- Secure the system against unintentional activation.
- Ensure a controlled restart after maintenance is completed.

5.1 Troubleshooting

WARNING!

Risk of injury due to improper maintenance work

- Maintenance may be carried out by authorised technicians only and with the appropriate tools.

WARNING!

Risk of injury from unintentional activation of the system and uncontrolled restart

- Secure the system against unintentional activation.
- Ensure a controlled restart after maintenance is completed.

Check in case of faults:

- the device is installed according to regulations,
- the connection has been properly made,
- the device is not damaged,
- all screws have been tightened,
- voltage and pressure have been applied,
- and the pipelines are clean.

If the magnet is not attracting

Possible cause:

- Short circuit or solenoid interrupted
- Core or core area contaminated

MAN 1000701627 EN Version: B Status: RL (released | freigegeben) printed: 14.07.2026

valvesgo.com

6 Spare parts

CAUTION!

Risk of injury and/or damage to property due to incorrect parts

Incorrect accessories and unsuitable spare parts may cause injuries and damage the device and the surrounding area.

- Use only original accessories and original spare parts from Bürkert.
- Do not open the fluidic part of the device without the manufacturer's consent.

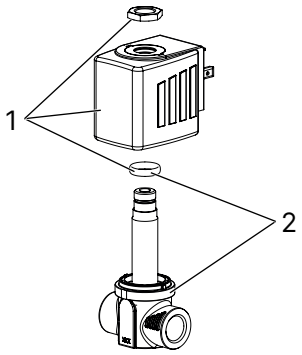

1	Coil	2	Armature

- Order the solenoid or armature, quoting the order number of the device (see Type label [▸ 8]).
  Example: Solenoid for Type 6240 Order no. XXXXXXXX

MAN 1000701627 EN Version: B Status: RL (released | freigegeben) printed: 14.07.2026

valvesgo.com

valvesgo.com

7 Logistics

7.1 Transport and storage

- Protect the device against moisture and dirt in the original packaging during transportation and storage.
- Avoid UV radiation and direct sunlight.
- Protect connections, if present, from damage with protective caps.
- Observe the permitted storage temperature.

7.2 Return

No work or tests will be carried out on the device until a valid Contamination Declaration has been received.

- To return a used device to Bürkert, contact the Bürkert sales office. A return number is required.

7.3 Disposal

Environmentally friendly disposal

- Follow national regulations regarding disposal and the environment.
- Collect electrical and electronic devices separately and dispose of them as special waste.

Further information at country.burkert.com

MAN 1000701627 EN Version: B Status: RL (released | freigegeben) printed: 14.07.2026

valvesgo.com