bürkert
FLUID CONTROL SYSTEMS

Type 2300

2/2-way angle-seat control valve
2/2-Wege-Schrägsitzregelventil
Vanne de réglage à siège incliné 2/2 voies

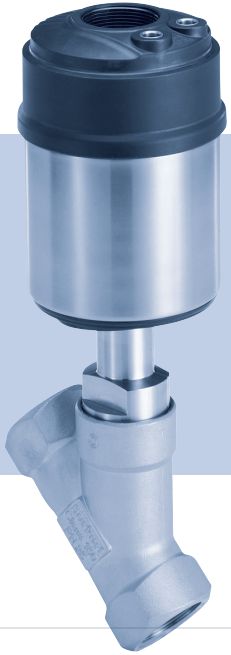

Operating Instructions

Bedienungsanleitung
Manuel d‘utilisation

MAN 1000295316 EN Version: FStatus: RL (released | freigegeben) printed: 11.09.2026

valvesgo.com

valvesgo.com

We reserve the right to make technical changes without notice.
Technische Änderungen vorbehalten.
Sous réserve de modifications techniques.

© Bürkert Werke GmbH & Co. KG, 2008 - 2022

Operating Instructions 2212/13_EU-ML_00805626 / Original DE

valvesgo.com

1 OPERATING INSTRUCTIONS 4
1.1 Symbols 4
1.2 Definition of terms/abbreviations 4
2 INTENDED USE 5
3 BASIC SAFETY INSTRUCTIONS 5
4 GENERAL NOTES 7
4.1 Contact addresses 7
4.2 Warranty 7
4.3 Information on the Internet 7
5 PRODUCT DESCRIPTION 7
5.1 General description 7
5.2 Variants 7
5.3 Properties 8
5.4 Intended area of application 9
6 STRUCTURE AND FUNCTION 9
6.1 Structure 9
6.2 Function 10
7 TECHNICAL DATA 12
7.1 Conformity 12
7.2 Standards 12
7.3 Type label 12
7.4 Operating conditions 13
7.5 Flow values and characteristics 17
7.6 General technical data 22
8 INSTALLATION 23
8.1 Safety instructions 23
8.2 Before installation 23
8.3 Installation 25
8.4 Pneumatic connection 28
8.5 Start-up 29
8.6 Disassembly 29
10 MAINTENANCE, CLEANING 30
10.1 Safety instructions 30
10.2 Maintenance work 30
10.3 Replacing wearing parts 31
11 FAULTS 40
12 SPARE PARTS 41
12.1 Replacement part set 41
12.2 Installation tools 43
13 TRANSPORT, STORAGE, PACKAGING 43

valvesgo.com

1 OPERATING INSTRUCTIONS

The operating instructions describe the entire life cycle of the device. Keep these instructions in a location which is easily accessible to every user and make them available to every new owner of the device.

The operating instructions contain important safety information!

Failure to observe these instructions may result in hazardous situations.

- The operating instructions must be read and understood.

1.1 Symbols

DANGER!

Warns of an immediate danger!

- Failure to observe these instructions will result in death or serious injuries.

WARNING!

Warns of a potentially hazardous situation!

- Failure to observe these instructions may result in serious injuries or death.

CAUTION!

Warns of a potential danger!

- Failure to observe these instructions may result in moderate or minor injuries.

NOTE!

Warns of damage!

- Failure to observe these instructions may result in damage to the device or the system.

Indicates important additional information, tips and recommendations.

Refers to information in these operating instructions or in other documentation.

- Designates instructions to avoid a danger.

→ Highlights a procedure which you must carry out.

1.2 Definition of terms/abbreviations

The term "device" used in these instructions always refers to the Type 2300 angle-seat control valve.

The abbreviation "Ex" used in these instructions always stands for "explosion-proof".

In these instructions, the unit bar stands for relative pressure. The absolute pressure is stated separately in bar(abs).

valvesgo.com

2 INTENDED USE

Improper use of Type 2300 may be hazardous to persons, systems in the vicinity and the environment.

- The device is designed to control the flow of liquid and gaseous media. It can only be operated in combination with a corresponding control unit.
- To use the device, observe the permitted data, operating conditions and application conditions. These specifications can be found in the contract documents, the operating instructions and on the type label.
- Protect device from harmful environmental influences (radiation, air humidity, fumes, etc.). For any matters requiring clarification, contact the relevant sales department.
- Prerequisites for safe and trouble-free operation are correct transportation, correct storage, installation, start-up, operation and maintenance.
- In the potentially explosive atmosphere, only use devices that are approved for this purpose. These devices are identified by a separate Ex type label. Before use, note the information on the separate Ex type label and the Ex additional instructions or the separate Ex operating Instructions.
- Use the device only in conjunction with third-party devices and components recommended or approved by Bürkert.
- Use the device only as intended. Non-intended use of the device may be dangerous to people, nearby equipment and the environment.

3 BASIC SAFETY INSTRUCTIONS

These safety instructions do not take account of any

- contingencies or events which may occur during installation, operation and maintenance of the devices;
- local safety regulations that are within the operator's scope of responsibility, including those relating to the installation personnel.

DANGER!

Risk of injury due to high pressure and escaping medium!

- Before working on the system or device, switch off the pressure and vent or empty the lines.

Risk of injury due to electric shock. (with installed electrical components)

- Before working on the device or system, switch off the power supply. Secure against reactivation.
- Observe the applicable accident prevention and safety regulations for electrical devices.

WARNING!

Risk of injury when opening the actuator!

The actuator contains a spring under tension. When the actuator is opened, the spring will jump out and may cause injuries.

- Do not open the actuator.

valvesgo.com

Risk of injury due to moving parts in the device!

- Do not reach into openings in the device.

Danger due to loud noises.

- Depending on the usage conditions, the device may generate loud noises. Detailed information on the probability of loud noises is available from the respective sales department.
- Wear hearing protection when in the vicinity of the device.

CAUTION!

Risk of burns or fire from hot device surfaces due to prolonged operation.

- Only touch the device when wearing protective gloves.
- Keep the device away from highly flammable substances and media.

Discharge of medium if packing gland worn

- Relief bore must be regularly inspected for any medium leakages.
- If the medium is hazardous, secure the area around the leakage to prevent risks.

General hazardous situations.

To prevent injuries, observe the following:

- Secure device or system to prevent unintentional activation.
- Only trained technicians may perform installation and maintenance work.
- Perform installation work and maintenance work using suitable tools only.
- Following interruption of the process, ensure that the process is restarted in a controlled manner. Observe the sequence:
  1. Apply electrical or pneumatic supply.
  2. Charge with medium.
- Use the device only when it is in perfect condition and in accordance with the operating instructions.
- For applications planning and operation of the device, observe the plant-specific safety regulations.
- The plant owner is responsible for the safe operation and handling of the plant.
- Observe the general rules of technology.

Please observe the following in order to protect against damage to the device:

- Feed only those media listed in chapter „7 Technical data“ into the medium ports.
- Do not place the valve under mechanical stress (e.g. by placing objects on it or standing on it).
- Do not make any external modifications to the valves. Do not paint housing parts or screws.
- Transport, install and dismantle a heavy device only with the aid of a second person and using suitable equipment.
- The exhaust air can be contaminated by lubricants in the actuator.

valvesgo.com

valvesgo.com

4 GENERAL NOTES

4.1 Contact addresses

Germany

Bürkert Fluid Control System
Sales Center
Christian-Bürkert-Str. 13–17
D-74653 Ingelfingen
Tel. +49 (0) 7940 - 10 91 111
Fax +49 (0) 7940 - 10 91 448
E-mail: info@burkert.com

International

The contact addresses can be found on the back pages of the printed operating instructions.

They are also available online at: country.burkert.com

4.2 Warranty

A precondition for the warranty is that the device is used as intended in consideration of the specified operating conditions.

4.3 Information on the Internet

Operating instructions and data sheets for Type 2300 can be found online at: country.burkert.com

5 PRODUCT DESCRIPTION

5.1 General description

The 2/2-way angle-seat control valve Type 2300 is suitable for liquid and gaseous media.

Using neutral gases or air (control media), it controls the flow of water, alcohol, oil, fuel, hydraulic fluid, saline solution, lye, organic solvents and vapour (flow media).

The angle-seat control valve Type 2300 can only be used in combination with a control unit.
Possible control units are:
Positioner Type 8692, 8694 and 8696
Process controller Type 8693

5.2 Variants

The 2/2-way angle-seat control valve Type 2300 is available in 2 variants:

- Standard device – **without** separate Ex type label.
  Standard devices must not be used in the potentially explosive area.
- Ex variant – **with** separate Ex type label.
  The Ex variant may be used in the potentially explosive area. The specifications on the separate Ex type label and the additional device information with safety instructions for the Ex area must be followed.

valvesgo.com

5.3 Properties

- Direct installation of the positioner Type 8692/8694/8696 or process controller Type 8693.
- High seal tightness due to self-adjusting packing glands (spindle seal element).
- Tight-sealing when using the PTFE control cone.
- High flow rate values due to the stainless steel valve body that aids in flow.
- Easy and quick replacement of the control cone.
- Actuator can be seamlessly rotated by 360°.
- Maintenance-free under normal conditions.

5.3.1 Technical features

- Characteristic: modified flow characteristic of equal per cent.
- Theoretical rangeability (Kv_S/Kv_0) 50:1; alternatively other rangeabilities are possible.
- Kv_R value = lowest Kv value at which the tilt tolerance as per DIN EN 534-2-4 is still observed:
  ≤ DN20 Kv_R at 10% of the stroke
  > DN20 Kv_R at 5% of the stroke
- PN body PN25

5.3.2 Options

Control unit: Depending on the requirements, various control unit variants are available.

- Positioner Type 8692, 8694 and 8696
- Process controller Type 8693
- Vacuum
- FDA foodstuff compliance
- DVGW
- ATEX

5.3.3 Device variants

Pilot pressure

Variants with lower pilot pressure (reduced spring force) are available on request.

Contact your Bürkert sales department or the Bürkert Sales Center (info@burkert.com).

Actuator sizes

The angle-seat control valve is available for the following actuator sizes, depending on the DN (conversion of actuator sizes see chapter „7.3“ on page 12):

Orifice DN	Available actuator size [mm]			
15	50	70	–	–
20	50	70	90	
25	50	70	90	
32		70	90	
40			90	130
50			90	130
65			–	130

Tab. 1: Actuator sizes

valvesgo.com

5.4 Intended area of application

Observe the maximum pressure and temperature range on the type label!

- For neutral gases and liquids up to 25 bar.
- Vapour up to 230 °C for steel valve seat seal (see chapter „7.4.1“).
  Vapour up to 130 °C for PTFE valve seat seal.
  Hot water up to 200 °C for steel valve seat seal (see chapter „7.4.1“).
- Aggressive media.

5.4.1 Application areas

e.g. Plant construction
Food processing
Chemical process engineering
Steriliser construction, temperature regulation
Gas dosage
Conveyor systems for various bulk goods (including sensitive foods)

6 STRUCTURE AND FUNCTION

The angle-seat control valve Type 2300 can only be used in combination with a control unit.

Possible control units are:
Positioner Type 8692, 8694 and 8696
Process controller Type 8693

6.1 Structure

The angle-seat control valve consists of a pneumatically operated piston actuator, a control cone and a 2/2-way angle-seat valve body.

The control cone is modularly connected to the actuator spindle via a spring-type straight pin, and can thus be quickly replaced.

Nearly all line connections are possible for the body. Bushing and welded connection are offered as the standard device.

The valve seats are directly integrated. The flow direction is always below the valve seat.

The description of the control functions (CF) can be found in chapter „6.2.1 Control functions (CF)“

valvesgo.com

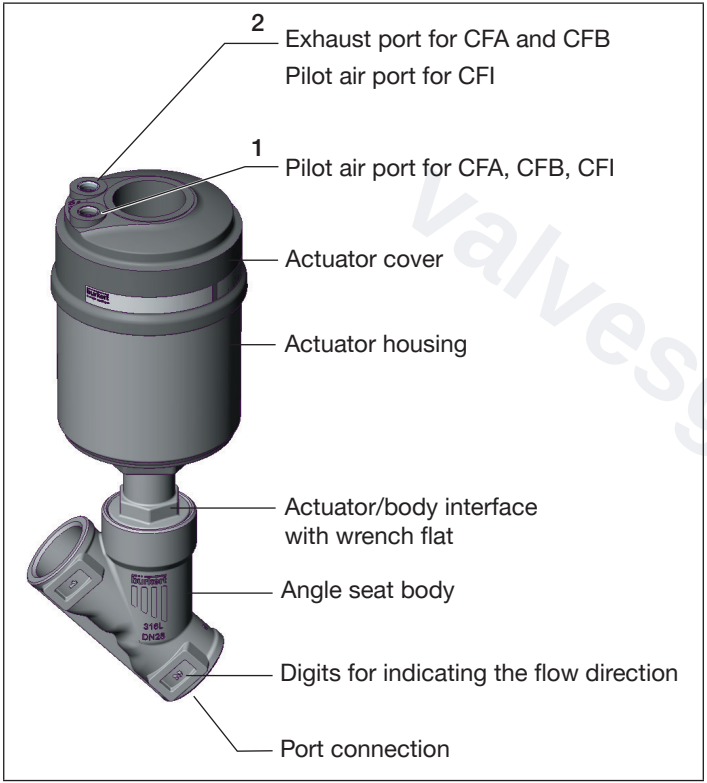

Fig. 1: Angle-seat control valve Type 2300, structure and description

6.2 Function

The valve seat is always closed against the medium flow.

Spring force (CFA) or pneumatic pilot pressure (CFB and CFI) generate the closing force on the control cone. A spindle connected to the actuator piston transmits the force.

6.2.1 Control functions (CF)

WARNING!

For control function I – risk of pilot pressure failure!

With control function I, the control unit and reset are pneumatic. No defined position is reached during a pressure failure.

- To ensure a controlled restart of the device, first apply pilot pressure and then activate the medium.

Control function A (CFA)

Closed by spring force in rest position

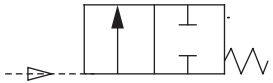

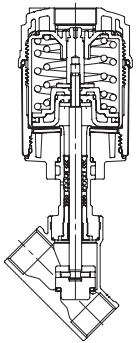

valvesgo.com

Control function B (CFB)

Opened by spring force in rest position

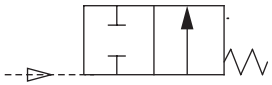

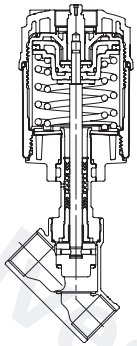

Control function I (CFI)

Actuating function via reciprocal pressurisation.

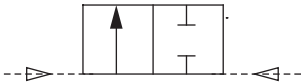

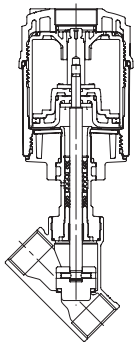

6.2.2 Flow direction below seat

Depending on the variant, the valve is closed against the medium flow either with spring force (control function A, CFA) or pilot pressure (control function B or I, CFB or CFI).
Because the medium pressure is below the control cone, it helps open the valve.

WARNING!

Valve leak if there is too little minimum pilot pressure or high medium pressure!

Minimum pilot pressure for CFB and CFI that is too low, or failing to meet the permitted medium pressure, can cause a leak in the valve seat.

- Adhere to minimum pilot pressure.
- Do not exceed the medium pressure.
- See chapter „7.4.3 Pressure ranges“.

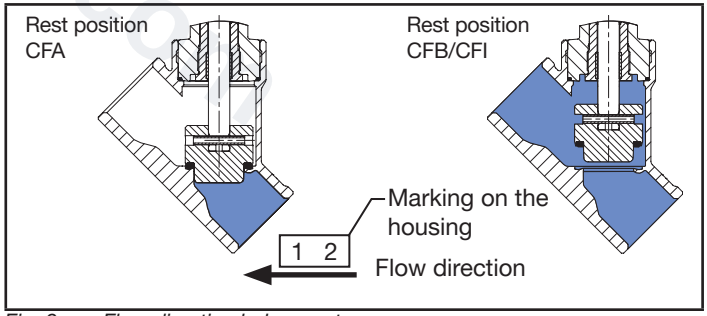

Fig. 2: Flow direction below seat (idle on/off, closing against medium)

valvesgo.com

7 TECHNICAL DATA

7.1 Standards and directives

The device complies with the relevant EU harmonisation legislation. In addition, the device also complies with the requirements of the laws of the United Kingdom.

The harmonised standards that have been applied for the conformity assessment procedure are listed in the current version of the EU Declaration of Conformity/UK Declaration of Conformity.

According to Pressure Equipment Directive observe the following operating conditions:

Nominal diameter port connection	Maximum pressure for compressible fluids of Group 1 (dangerous gases and vapours according to Art. 3, No. 1.3, letter a, first dash)
DN65	15 bar

7.2 Type label

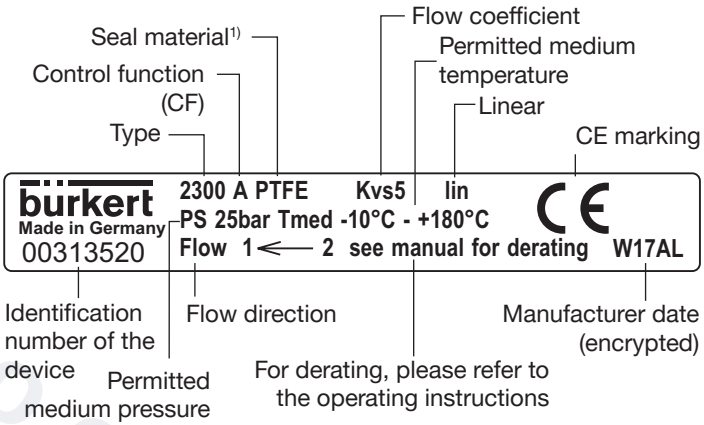

1) *For a variant description see „7.6 General technical data“*

7.3 Conversion of actuator sizes

Actuator size [mm]	Designation	Outer diameter A [mm]	Scale drawing
50	D	64,5	
70	M	91	
90	N	120	
130	P	159	

Tab. 2: Conversion of actuator sizes

valvesgo.com

7.4 Operating conditions

Note the permitted ranges on the device type label!

7.4.1 Temperature ranges

Actuator size [mm]	Actuator material	Medium		Environment[2)]
		Seat seal Steel	Seat seal PTFE [3)]	
50	PPS	–10 – +230 °C	–10 – +130 °C	–10 – +60 °C[4)] –10 – +100 °C[5)]
70				
90				
130				

Tab. 3: Temperature ranges

2) *When using a pilot valve/control unit, note its temperature range.*

The angle-seat control valve is suitable for steam sterilisation.

Derating pressure and temperature ranges

Usage limits of the valve (derating operating pressure)

Temperature	Medium pressure
–10 – +50 °C	25 bar
100 °C	24.5 bar
150 °C	22.4 bar
200 °C	20.3 bar
230 °C	19 bar

Tab. 4: Derating the medium pressure as per DIN EN 12516-1/PN25

Temperature	Medium pressure
–29 – +38 °C	19 bar
50 °C	18.4 bar
100 °C	16.2 bar
150 °C	14.8 bar
200 °C	13.7 bar
230 °C	12.7 bar

Tab. 5: Derating the medium pressure as per ASME B16.5/ ASME B16.34 Cl.150

3) *During use with Tmax > 130 °C, a PEEK seal is recommended*
4) *Pilot air connector as push-in connector*
5) *Control air connector as threaded bushing.*

valvesgo.com

Temperature	Medium pressure
–10 – +50 °C	14 bar
100 °C	14 bar
150 °C	13.4 bar
200 °C	12.4 bar
230 °C	11.7 bar

Tab. 6: Derating the medium pressure as per JIS B 2220 10K

Usage limits of medium and ambient temperature

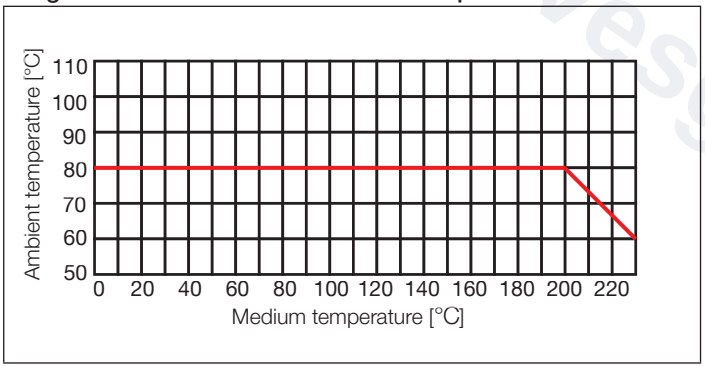

Fig. 3: Derating ELEMENT actuator size 50, 70, 90, 130

7.4.2 Control medium

In conjunction with pneumatic control units (positioner or process controller), pilot air as per DIN ISO 8573-1 must be used:

- Class 3 (for water content)
- Class 5 (for dust and oil content).

The exact specification is described in the operating instructions for the respective positioner/process controller in the chapter "Technical data".

7.4.3 Pressure ranges

Pilot pressure range[6] in closed-loop control mode

Actuator size [mm]	DN	Pilot pressure range[5] [bar]	
		CFA	CFB
50	15–25	3.4–5.5	3.3–5.1
70	15–32	2.6–5.5	2.6–5.2
90	20–50	3.3–5.5	1.8–2.5
130	40–50	3.3–5.6	1.9–2.7
	65	4.6–5.6	1.9–2.7

Tab. 7: Pilot pressure range in closed-loop control mode

[6] *To ensure secure operation with the pneumatic control unit (positioner or process controller), note the permitted minimum and maximum pilot pressure!*

valvesgo.com

Maximum pilot pressure for valves without a pneumatic control unit

Actuator size [mm]	Actuator material	max. permitted pilot pressure[7]
50	PPS	10 bar
70		
90		
130		7 bar

Tab. 8: Pilot pressure without a pneumatic control unit

7) *Observe the maximum pressure range on the type label!*

Medium pressure for control function A[8]

Actuator size [mm]	DN	Required pilot pressure[bar]	Max. sealed medium pressure [bar]
50	15	5.5	16
	20	5.5	10
	25	5.5	5
70	15	5.5	25
	20	5.5	25
	25	5.5	12
	32	5.5	6
90	25	5.5	25
	32	5.5	16
	40	5.5	12
	50	5.5	7
130	32	5.6	25
	40	5.6	25
	50	5.6	25
	65	5.6	16 (15*)

Tab. 9: Medium pressure for control function A

** According to Pressure Equipment Directive for compressible fluids of Group 1 (dangerous gases and vapours according to Art. 3, No. 1.3, letter a, first dash)*

8) *The control functions are described in chapter „6.2.1 Control functions (CF)“.*

valvesgo.com

Pilot pressure for control function B[9)]

Actuator size [mm]	DN	Pilot pressure [bar] with medium pressure 0 bar	Pilot pressure [bar] with medium pressure max.	Max. permitted Operating pressure [bar]
50	15	5.1	7.0	16
	20	5.1	7.0	9
	25	5.1	7.0	5
70	15	5.2	6.3	25
	20	5.2	7.0	21
	25	5.2	7.0	12
	32	5.2	7.0	6
90	20	2.4	3.8	25
	25	2.4	4.6	25
	32	2.5	5.7	25
	40	2.5	7.0	25
	50	2.5	7.0	14
130	40	2.7	4.9	25
	50	2.7	6.2	25
	65	2.7	7.0	16 (15*)

Tab. 10: Pilot pressure for control function B (CFB)

* According to Pressure Equipment Directive for compressible fluids of Group 1 (dangerous gases and vapours according to Art. 3, No. 1.3, letter a, first dash)

Variants with lower pilot pressure (reduced spring force) are available on request.

Required minimum control pressure with control function B depending on medium pressure

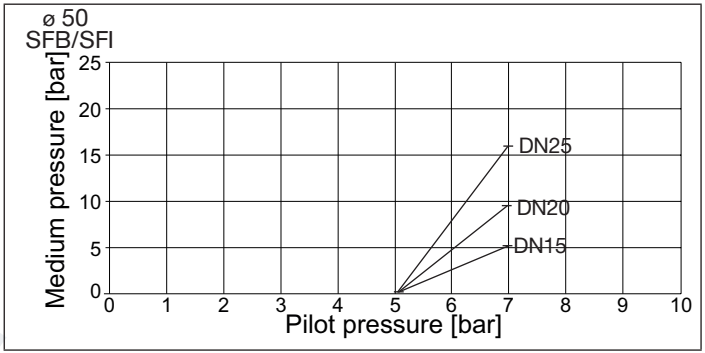

Fig. 4: Pressure diagram, actuator size 50, control function B

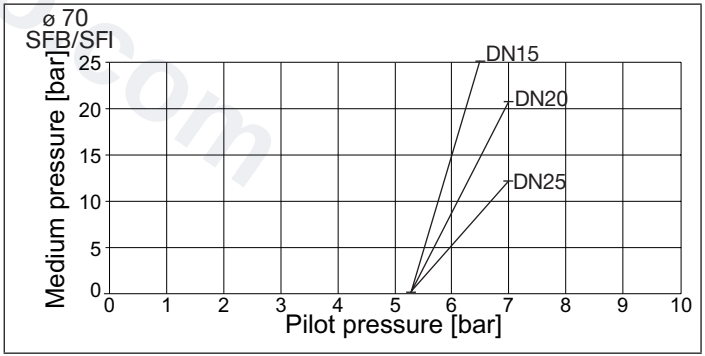

Fig. 5: Pressure diagram, actuator size 70, control function B

9) *The control functions are described in chapter „6.2.1“.*

valvesgo.com

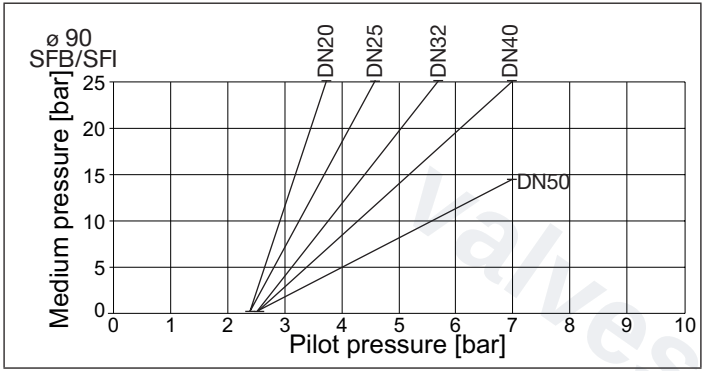

Fig. 6: Pressure diagram, actuator size 90, control function B

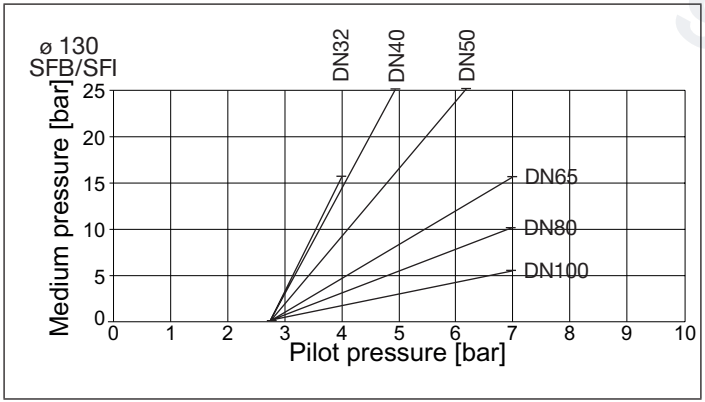

Fig. 7: Pressure diagram, actuator size 130, control function B

7.5 Flow rate values and characteristics

Flow rate values for DN15

Stroke [%]	Kv value [m³/h]	Stroke [%]	Kv value [m³/h]
5	0.16	60	3.5
10	0.17	70	4.0
20	0.22	80	4.5
30	0.4	90	4.8
40	1.2	100	5.0
50	2.7		

Tab. 11: Flow rate values for DN15

Flow rate characteristic for DN15

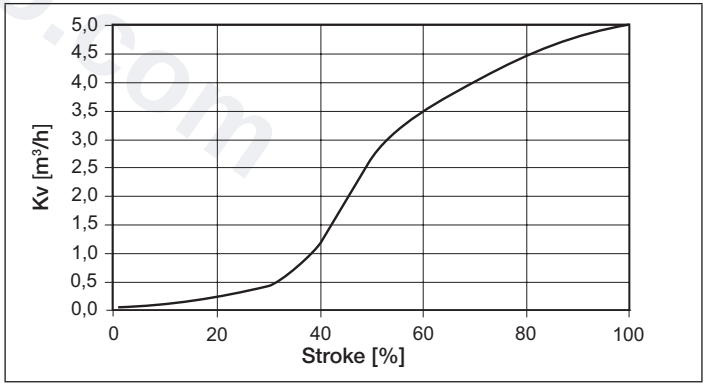

Fig. 8: Flow rate characteristic for DN15

valvesgo.com

Flow rate values for DN20

Stroke [%]	Kv value [m³/h]	Stroke [%]	Kv value [m³/h]
5	0.26	60	7.2
10	0.27	70	8.3
20	0.4	80	9.1
30	1.1	90	9.6
40	4.0	100	10.0
50	5.9		

Tab. 12: Flow rate values for DN20

Flow rate values for DN25

Stroke [%]	Kv value [m³/h]	Stroke [%]	Kv value [m³/h]
5	0.34	60	11.5
10	0.36	70	13.0
20	0.62	80	14.2
30	1.5	90	15.4
40	5.2	100	16.0
50	8.9		

Tab. 13: Flow rate values for DN25

Flow rate characteristic for DN20

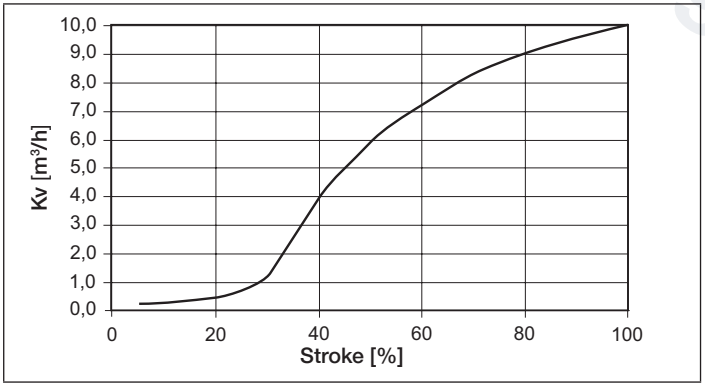

Fig. 9: Flow rate characteristic for DN20

Flow rate characteristic for DN25

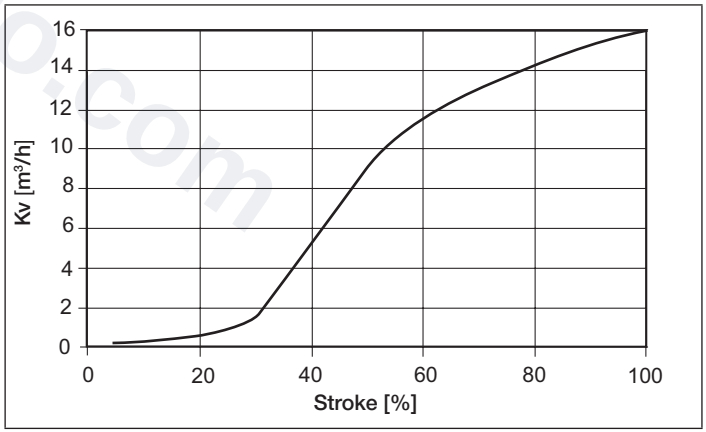

Fig. 10: Flow rate characteristic for DN25

valvesgo.com

Flow rate values for DN32

Stroke [%]	Kv value [m³/h]	Stroke [%]	Kv value [m³/h]
5	0.43%	60	13.8
10	0.52	70	16.4
20	0.82	80	19.2
30	1.4	90	21.3
40	4.0	100	23.0
50	9.3		

Tab. 14: Flow rate values for DN32

Flow rate characteristic for DN32

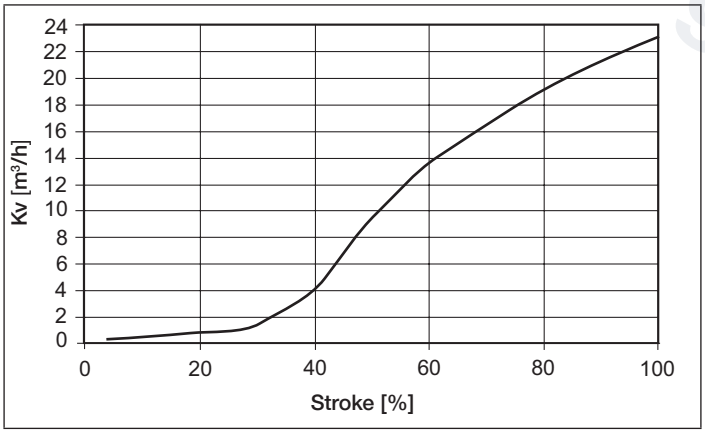

Fig. 11: Flow rate characteristic for DN32

Flow rate values for DN40 – actuator size ø 90

Stroke [%]	Kv value [m³/h]	Stroke [%]	Kv value [m³/h]
5	0.47	60	21.5
10	0.62	70	25.3
20	1.1	80	28.8
30	2.6	90	31.6
40	10.0	100	34.0
50	17.0		

Tab. 15: Flow rate values for DN40 – actuator size ø 90

Flow rate characteristic for DN40 – actuator size ø 90

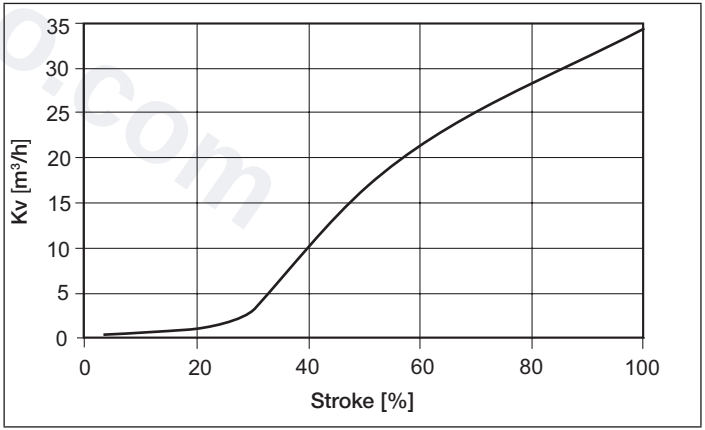

Fig. 12: Flow rate characteristic for DN40 – actuator size ø 90

valvesgo.com

Flow rate values for DN40 – actuator size ø 130

Stroke [%]	Kv value [m³/h]	Stroke [%]	Kv value [m³/h]
5	0.48	60	24.3
10	0.66	70	28.3
20	1.4	80	31.7
30	5.1	90	34.5
40	14.0	100	36.0
50	20.0		

Tab. 16: Flow rate values for DN40 – actuator size ø 130

Flow rate values for DN50 – actuator size ø 90

Stroke [%]	Kv value [m³/h]	Stroke [%]	Kv value [m³/h]
5	0.85	60	28.6
10	1.1	70	35.6
20	1.6	80	40.6
30	2.7	90	45.0
40	10.2	100	49.0
50	20.0		

Tab. 17: Flow rate values for DN50 – actuator size ø 90

Flow rate characteristic for DN40 – actuator size ø 130

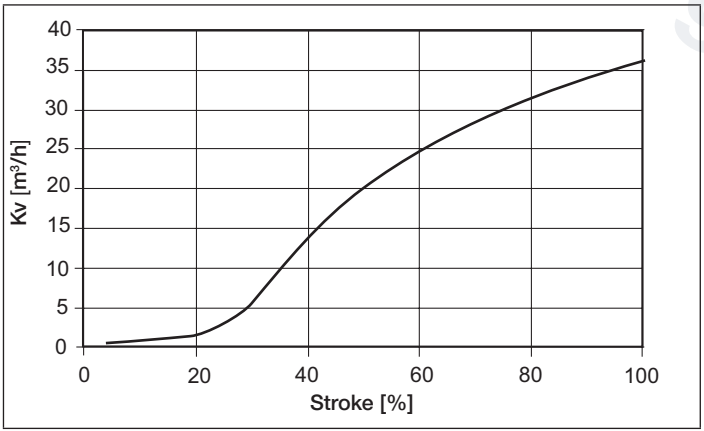

Fig. 13: Flow rate characteristic for DN40 – actuator size ø 130

Flow rate characteristic for DN50 – actuator size ø 90

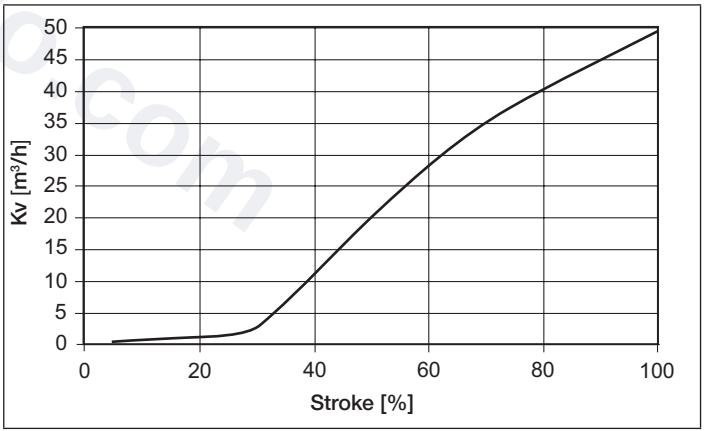

Fig. 14: Flow rate characteristic for DN50 – actuator size ø 90

valvesgo.com

Flow rate values for DN50 – actuator size ø 130

Stroke [%]	Kv value [m³/h]	Stroke [%]	Kv value [m³/h]
5	0.87	60	35.0
10	1.2	70	40.3
20	1.8	80	45.0
30	4.0	90	48.0
40	15.2	100	53.0
50	26.0		

Tab. 18: Flow rate values for DN50 – actuator size ø 130

Flow rate values for DN65 – actuator size ø 130

Stroke [%]	Kv value [m³/h]	Stroke [%]	Kv value [m³/h]
5	1.7	60	58.0
10	2.0	70	67.0
20	6.5	80	75.0
30	20.0	90	83.0
40	35.0	100	90.0
50	48.0		

Tab. 19: Flow rate values for DN65 – actuator size ø 130

Flow rate characteristic for DN50 – actuator size ø 130

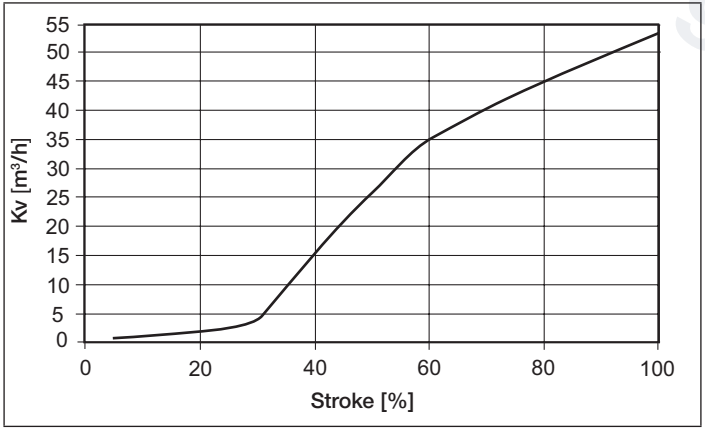

Fig. 15: Flow rate characteristic for DN50 – actuator size ø 130

Flow rate characteristic for DN65 – actuator size ø 130

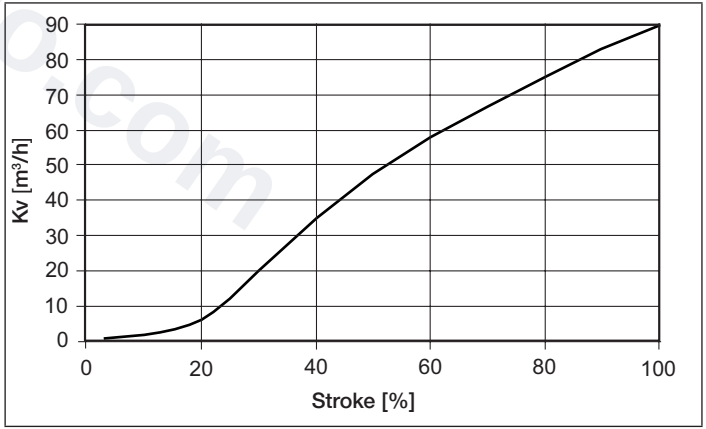

Fig. 16: Flow rate characteristic for DN65 – actuator size ø 130

valvesgo.com

7.6 General technical data

Control functions (CF)	Valve seat always closes against medium flow
Control function A	Closed by spring force in rest position
Control function B	Opened by spring force in rest position
Control function I	Settings function via alternating pressurisation (not for actuator size 50 in combination with Type 8696)
Actuator sizes	50 70 90 130
Materials	
Valve body	316L
Actuator	PPS and stainless steel
Sealing elements	FKM and EPDM
Spindle seal (with silicone grease)	PTFE V-rings with spring compensation
Control cone	Control cone with PTFE or PEEK seal steel/steel seal
Spindle	1.4401/1.4404
Spindle guide	1.4401/1.4404/316L

Ports	
Pilot air port	Prepared for direct coupling
Medium connection	Socket: G ½–G 2 ½ (NPT, RC on request) Welded connection: as per EN ISO 1127 (ISO 4200), DIN 11850 R2 other connections on request
Media	
Control medium	Neutral gases, air
Flow media	Water, alcohols, oils, fuels, hydraulic fluids, salt solutions, alkalis, organic solvents
Any	installation position, preferably actuator face up
Degree of protection	IP67 as per IEC 529/EN 60529

valvesgo.com

8 INSTALLATION

8.1 Safety instructions

DANGER!

Risk of injury from high pressure in the system!

- Before loosening lines and valves, turn off the pressure and vent the lines.

WARNING!

Risk of injury due to improper assembly!

- Installation may be carried out by authorised technicians only and with the appropriate tools!

Risk of injury due to unintentional activation of the system and uncontrolled restart!

- Secure the system against unintentional activation.
- Following installation, ensure a controlled restart.

For control function I – risk of pilot pressure failure!

With control function I, the control unit and reset are pneumatic. No defined position is reached during a pressure failure.

- To ensure a controlled restart of the device, first apply pilot pressure and then activate the medium

Risk of injury due to moving parts in the device!

- Do not reach into openings.

CAUTION!

Risk of injury due to heavy device.

During transportation or installation work, a heavy device may fall down and cause injuries.

- Transport, install and remove heavy device with the aid of a second person only.
- Use suitable tools.

8.2 Before installation

- Any installation position of the angle-seat control valve is possible, preferably with the actuator facing upward.
- Ensure that pipelines are aligned before connecting the valve.
- Note the flow direction (flow direction always below seat).

8.2.1 Preparatory work

→ Clear impurities from pipelines (seal material, metal chips, etc.).

Devices with welded connection

NOTE!

For valves with a mounted control unit:

When welding the valve body into the pipeline, the control unit must not be installed.

- Uninstall the control unit from the actuator as described below.

Uninstall the control unit from the actuator (if present):

valvesgo.com

→ Clamp valve body into a collet.
→ Loosen fastening screws (2 x).
→ Pull the control unit upward.

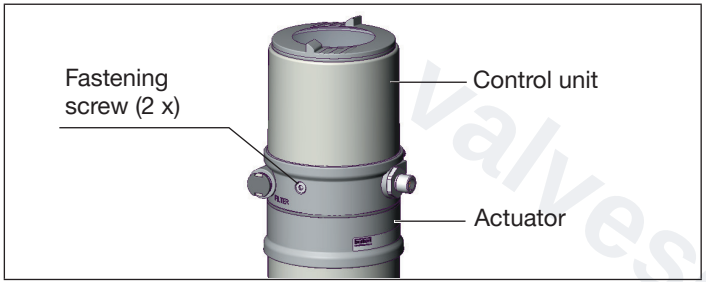

Fig. 17: Uninstall control unit

Remove actuator from the valve body:

→ Install collet (white nozzle) in pilot air port 1.

NOTE!

Damage to the seat seal or seat contour!

- When removing the actuator, the valve must be in the open position.

→ For control function A pressurise the pilot air port 1 with compressed air (5 bar): Valve opens.
→ Place a suitable open-end wrench on the wrench flat of the nipple.
→ Unscrew actuator from the valve body.

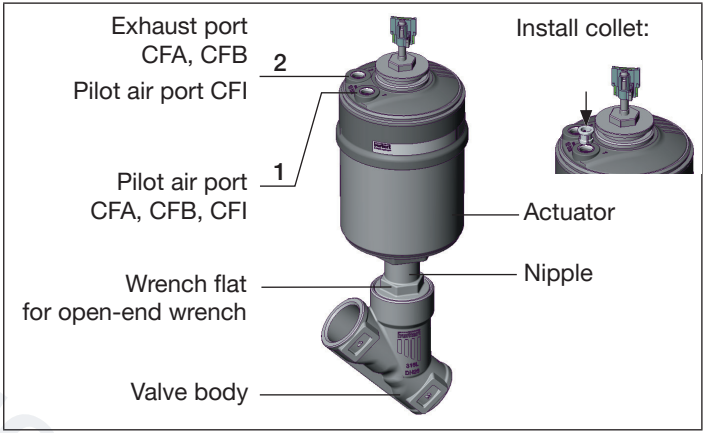

Fig. 18: Installation

Other device variants

→ Only uninstall the actuator if required by the customer.
→ For procedure see „Devices with welded connection“.

valvesgo.com

8.3 Installation

WARNING!

Risk of injury due to improper installation!

Failure to observe the tightening torque value is dangerous due to the risk of damage to the device.

- Use an open-end wrench for installation, never a pipe wrench.
- Observe tightening torque (see „Tab. 20: Tightening torques valve body/nipple“).

Dirt trap for devices with approval as per EN 161

According to EN 161 "Automatic shut-off valves for gas burners and gas appliances", a dirt trap, which prevents the penetration of a 1 mm test pin, must be installed upstream of the valve.

→ If the approval also applies to the stainless steel valve body, such a dirt trap must be attached in front of the angle-seat control valve.

8.3.1 Installing the body

Welded connection

→ Weld or bond valve body in pipeline system.

Other body variants

→ Connect valve body to pipeline.

8.3.2 Install actuator (welded connection)

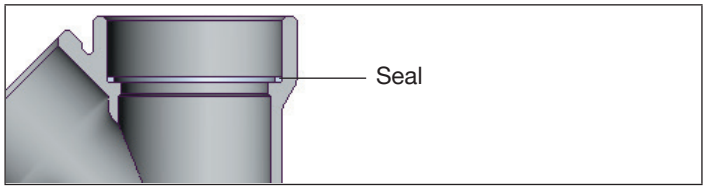

Fig. 19: Seal

→ Replace seal.

WARNING!

Risk due to incorrect lubricants!

Unsuitable lubricant may contaminate the medium. There is a risk of explosion in oxygen applications!

- For specific applications, e.g. oxygen or analysis applications, use approved lubricants only.

→ Before re-installation, grease nipple thread of the actuator (e.g. using Klüberpaste UH1 96-402 from Klüber).

NOTE!

Damage to the seat seal or seat contour!

- When installing the actuator, the valve must be in the open position.

→ For control function A pressurise the pilot air port 1 with compressed air (5 bar): Valve opens.

valvesgo.com

→ Screw actuator into the valve body. Observe tightening torque (see „Tab. 20“).

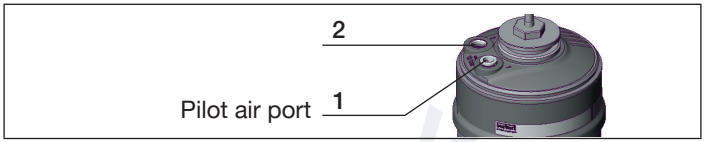

Fig. 20: Ports

Tightening torques valve body/nipple	
DN	**Tightening torque [Nm]**
15	45 ± 3
20	50 ± 3
25	60 ± 3
32	65 ± 3
40	
50	70 ± 3
65	100 ± 3

Tab. 20: Tightening torques valve body/nipple

8.3.3 Install control unit

Before installation, check the state of the control unit connections and align the actuator if necessary.
For a description see chapter „8.3.4 Turning actuator“.

→ Remove the collet from pilot air port 1.

→ Check the correct position of the O-rings in the pilot air ports.

→ Align the puck and control unit such that
1. the puck enters into the guide rail of the control unit and
2. the connection pieces of the control unit enter into the pilot air connections of the actuator (see „Fig. 22“).

NOTE!

Damage to the printed circuit board or functional failure!

▸ Make sure that the puck is lying flat on the guide rail.

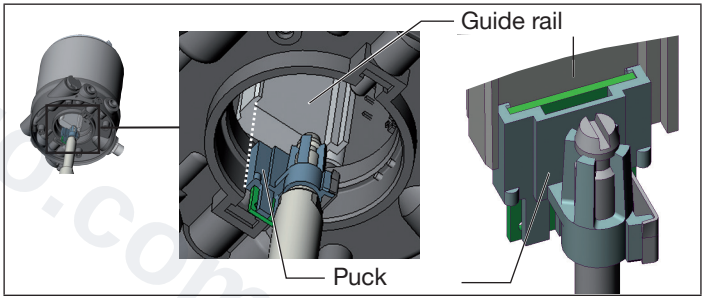

Fig. 21: Aligning the puck

→ Push the control unit onto the actuator without rotating it until no gap is visible at the form seal.

valvesgo.com

NOTE!

Excessive torque when tightening the fastening screw cannot ensure the degree of protection IP65/IP67!

- The fastening screws must only be applied with a maximum torque of 1.5 Nm.

→ Attach the control unit to the actuator using the two lateral fastening screws. Only lightly tighten the screws (maximum torque: 1.5 Nm).

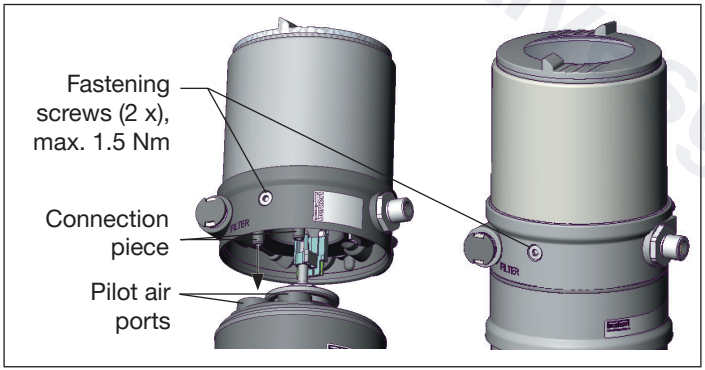

Fig. 22: Control unit installation

8.3.4 Turning actuator

The position of the ports can be seamlessly aligned by turning the actuator 360°.

Only the actuator can be rotated. It is not possible to rotate the control unit against the actuator.

NOTE!

Damage to the seat seal or seat contour!

- When turning the actuator, the valve must be in the open position.

Procedure:

→ Clamp valve body in a collet (only for valves which have not yet been installed).

→ For **control function A**:
Without control unit: pressurise the pilot air port 1 with compressed air (5 bar): Valve opens.
With control unit: open the valve in accordance with the operating instructions of the control unit.

→ Counter with a suitable open-end wrench on the wrench flat of the nipple.

WARNING!

Risk of injury from discharge of pressure and escaping medium!

The body connection can loosen when rotated incorrectly.

- Only turn the actuator **in the specified direction** (see „Fig. 23“)!

valvesgo.com

Actuator with hexagonal contour:

→ Place a suitable open-end wrench on the hexagon head of the actuator.

→ Move the actuator into the required position by turning it counterclockwise (seen from below).

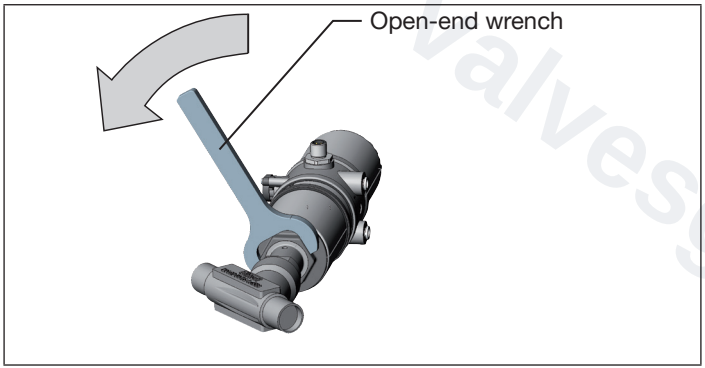

Fig. 23: Rotating with open-end wrench

8.4 Pneumatic connection

DANGER!

Risk of injury from high pressure in the system!

- Before loosening lines and valves, turn off the pressure and vent the lines.

WARNING!

Risk of injury due to unsuitable connection hoses!

Hoses that cannot withstand the pressure and temperature range can cause hazardous situations.

- Only use hoses that are permitted for the specified pressure and temperature range.
- Note the data sheet information from the hose manufacturers.

For control function I – risk of pilot pressure failure!

With control function I, the control unit and reset are pneumatic. No defined position is reached during a pressure failure.

- To ensure a controlled restart of the device, first apply pilot pressure and then activate the medium.

The pneumatic connection of the angle-seat control valve can only be performed in conjunction with the corresponding control unit.

Possible control units are:
Positioner Type 8692, 8694 and 8696
Process controller Type 8693

valvesgo.com

valvesgo.com

8.4.1 Connecting the control medium

→ Connect the control medium to the pilot air port (1) (3–7 bar; instrument air, oil-, water- and dust-free).

→ Mount the exhaust air line or a silencer onto the exhaust air port (3) and, if available, onto the exhaust air port (3.1).

For usage in an aggressive environment, we recommend using a pneumatic hose to drain all free pneumatic ports in a neutral atmosphere.

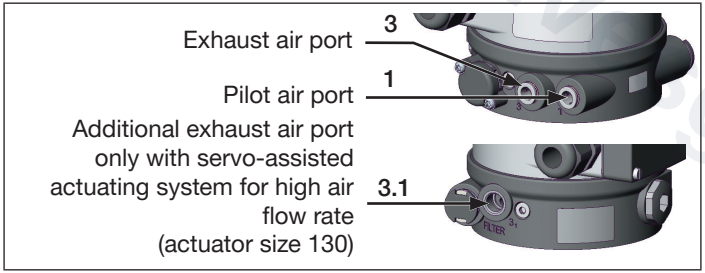

Fig. 24: Pneumatic connection

Pilot air hose:

Pilot air hoses of sizes 6/4 mm or ¼" can be used.

Optionally a pilot air port via G ⅛ thread is possible.

8.5 Start-up

Perform the X.TUNE after installing the device. This function presets the closed-loop control parameters.

For a description, please refer to the operating instructions of the control unit.

8.6 Disassembly

DANGER!

Risk of injury from discharge of pressure and escaping medium!

Dismantling a device which is under pressure is hazardous due to a sudden discharge of pressure or escaping medium.

▸ Before disassembly, shut off the pressure and vent all lines.

Procedure:

→ Disconnect the pneumatic connection.

→ Disassemble the device.

9 ELECTRICAL CONTROL UNIT

The Type 2300 valve can be combined with the following control units:

- Type 8692 Positioner
- Type 8694 Positioner
- Type 8696 Positioner
- Type 8693 Process controller

The electrical port of the pilot valve or the control unit is described in the respective operating instructions of the pilot valve/control unit.

valvesgo.com

10 MAINTENANCE, CLEANING

10.1 Safety instructions

DANGER!

Risk of injury from high pressure in the system!

- Before loosening lines and valves, turn off the pressure and vent the lines.

Risk of injury from electric shock!

- Before reaching into the system, switch off the power supply and secure against reactivation!
- Observe the applicable accident prevention and safety regulations for electrical devices!

WARNING!

Risk of injury due to improper maintenance work!

- Maintenance may be carried out by authorised technicians only!
- Use an open-end wrench, never a pipe wrench, to screw the valve body or actuator in or out, and observe the tightening torque.

Risk of injury due to unintentional activation of the system and uncontrolled restart!

- Secure the system against unintentional activation.
- Following maintenance, ensure a controlled restart.

WARNING!

For control function I – risk of pilot pressure failure!

With control function I, the control unit and reset are pneumatic. No defined position is reached during a pressure failure.

- To ensure a controlled restart of the device, first apply pilot pressure and then activate the medium.

Risk of injury due to moving parts in the device!

- Do not reach into openings.

10.2 Maintenance work

Actuator:

When used in accordance with these operating instructions, the actuator of the angle-seat control valve is maintenance-free.

Wearing parts of the angle-seat control valve:

Parts which are subject to natural wear are:

- seals
- control cone

→ If there is a leak, replace the respective wearing part with a corresponding spare part.
(For spare parts sets see chapter „12 Spare parts“).

Replacement of the wearing parts is described in chapter „10.3 Replacing wearing parts“.

valvesgo.com

Visual inspection:

According to the usage conditions, perform regular visual inspections:

→ Check medium ports for tightness.

→ Check relief bore on the pipe for leaks.

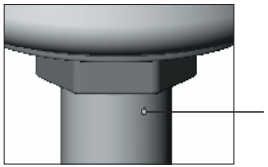

Fig. 25: Relief bore

10.2.1 Cleaning

Commercially available cleaning agents can be used to clean the outside.

NOTE!

Avoid causing damage with cleaning agents.

- Before cleaning, check that the cleaning agents are compatible with body materials and seals.

10.3 Replacing wearing parts

10.3.1 Replacing the control cone set

The control cone set consists of

- control cone
- seal
- spring-type straight pin
- lubricant

To change the control cone set, first remove the actuator from the valve body.

DANGER!

Risk of injury from discharge of pressure and escaping medium!

Dismantling a device which is under pressure is hazardous due to a sudden discharge of pressure or escaping medium.

- Before disassembly, shut off the pressure and vent all lines.

WARNING!

Risk of injury due to using wrong tool!

Performing installation work, using unsuitable tools, is hazardous due to possible damage to the device.

- To remove the actuator from the valve body, use an open-end wrench, never a pipe wrench.

valvesgo.com

Removing actuator from the valve body

→ Clamp valve body in a collet (only for valves which have not yet been installed).

NOTE!

Damage to the seat seal or seat contour!

▸ When turning the actuator, the valve must be in the open position.

→ For **control function A**:
Without control unit: pressurise the pilot air port 1 with compressed air (5 bar): Valve opens.
With control unit: open the valve in accordance with the operating instructions of the control unit.

→ Place a suitable open-end wrench on the wrench flat of the nipple.

→ Unscrew actuator from the valve body.

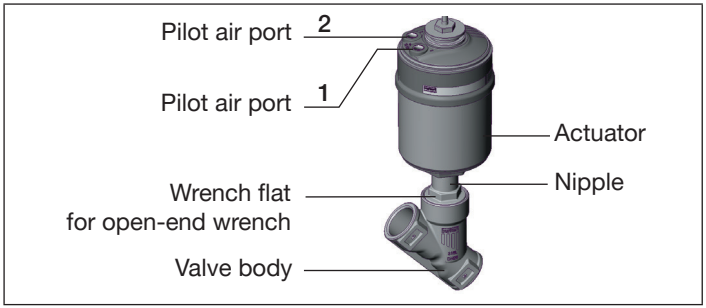

Fig. 26: Valve

Change control cone set

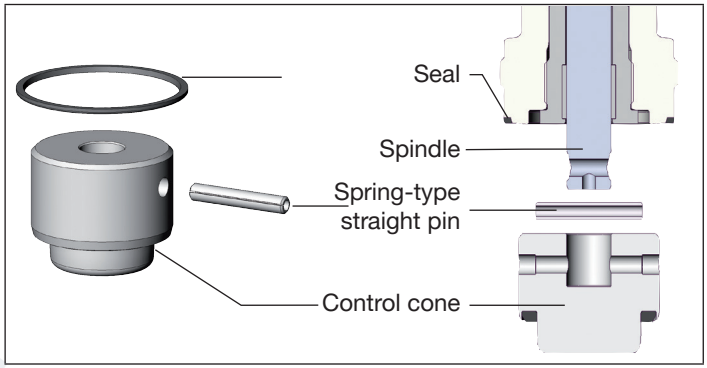

Fig. 27: Replacing the control cone set

NOTE!

Important for impeccable and stable device function!

The seal surface of the control cone must not be damaged.

Procedure:

→ Knock out spring-type straight pin using a suitable pin punch.
Pin punch ø 4 mm, for spindle diameter 10 mm.
Pin punch ø 5 mm, for spindle diameter 14 mm.

→ Remove control cone.

→ Place new control cone on the spindle.

→ Align boreholes in the control cone and spindle.

valvesgo.com

→ Support control cone on the cylindrical part using a prism or something similar.

→ Set up the spring-type straight pin and carefully hammer it in.

→ Centre the spring-type straight pin with the spindle axis.

Install actuator (with control unit) on the valve body

→ Replace the seal.

WARNING!

Risk due to incorrect lubricants!

Unsuitable lubricant may contaminate the medium. There is a risk of explosion in oxygen applications!

- For specific applications, e.g. oxygen or analysis applications, use approved lubricants only.

→ Before re-installation, grease nipple thread of the actuator (e.g. using Klüberpaste UH1 96-402 from Klüber).

NOTE!

Damage to the seat seal or seat contour!

- When turning the actuator, the valve must be in the open position.

→ For **control function A**:
Without control unit: pressurise the pilot air port 1 with compressed air (5 bar): Valve opens.
With control unit: open the valve in accordance with the operating instructions of the control unit.

→ Screw actuator into the valve body.
Observe tightening torque (see „Tab. 21“).

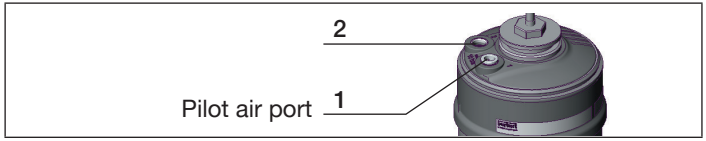

Fig. 28: Ports

Tightening torques valve body/nipple	
DN	**Tightening torque [Nm]**
15	45 ± 3
20	50 ± 3
25	60 ± 3
32	65 ± 3
40	
50	70 ± 3
65	100 ± 3

Tab. 21: Tightening torques valve body/nipple

If the position of the pilot air ports is unfavourable for installing the hoses, these can be seamlessly aligned by rotating the actuator by 360°.

The procedure is described in chapter „8.3.4 Turning actuator“.

valvesgo.com

10.3.2 Replacing the packing gland

The seal set for the packing gland includes

SP10/SP14	
• 1 support ring • 5 chevron seals • 2 or 3 thrust collars[10)] • 1 compression spring • 1 spacer • 1 seal • Lubricant	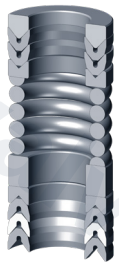
SP22	
• 1 support ring • 7 chevron seals • 2 thrust collars • 1 compression spring • 1 spacer • 1 seal • Lubricant	

Tab. 22: Seal set for packing gland

10) *depending on spindle diameter (10 or 14 mm)*

DANGER!

Risk of injury from discharge of pressure and escaping medium!

Dismantling a device which is under pressure is hazardous due to a sudden discharge of pressure or escaping medium.

- Before disassembly, shut off the pressure and vent all lines.

WARNING!

Risk of injury due to using wrong tool!

Performing installation work, using unsuitable tools, is hazardous due to possible damage to the device.

- To remove the actuator from the valve body, use an open-end wrench, never a pipe wrench.
- To replace the packing gland, use special installation wrench, modified socket wrench or open-end wrench.
- Observe tightening torques.

To replace the packing gland, first remove the actuator from the valve body and remove the control cone.

valvesgo.com

valvesgo.com

Removing actuator from the valve body

→ Clamp valve body in a collet (only for valves which have not yet been installed).

NOTE!

Damage to the seat seal or seat contour!

- When turning the actuator, the valve must be in the open position.

→ For **control function A**:
Without control unit: pressurise the pilot air port 1 with compressed air (5 bar): Valve opens.
With control unit: open the valve in accordance with the operating instructions of the control unit.

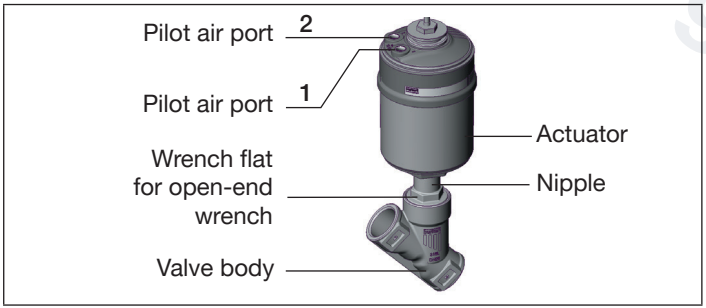

Fig. 29: Maintenance

→ Place a suitable open-end wrench on the wrench flat of the nipple.

→ Unscrew actuator from the valve body.

Remove control cone

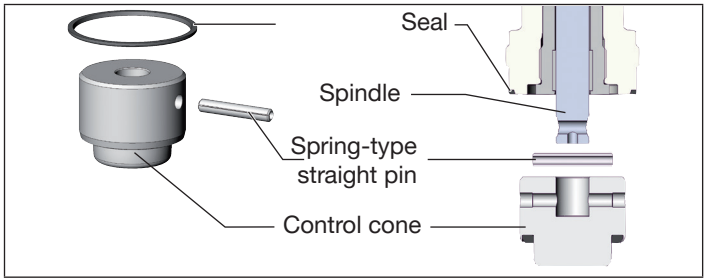

Fig. 30: Replacing the control cone set

NOTE!

Important for impeccable and stable device function!

- The seal surface of the control cone must not be damaged.

→ Knock out spring-type straight pin using a suitable pin punch.
Pin punch ø 4 mm, for spindle diameter 10 mm.
Pin punch ø 5 mm, for spindle diameter 14 mm.

→ Remove control cone.

valvesgo.com

Replacing packing gland

PEEK spindle guide (series-production status until April 2012):

→ Unscrew spindle guide using the installation wrench[11] and an open-end wrench.

VA spindle guide SP10/SP14 (series-production status as of April 2012):

→ Unscrew spindle guide using a modified socket wrench[11].

VA spindle guide SP22:

→ Unscrew VA spindle guide using an open-end wrench.

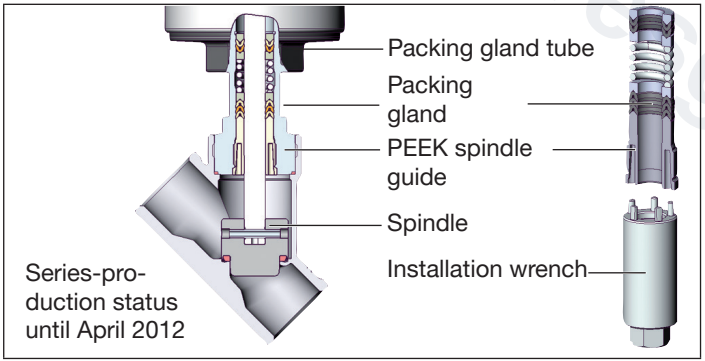

Fig. 31: Replacing packing gland (PEEK spindle guide)

[11] *The assembly wrench or modified socket wrench are available from your Bürkert sales department.*

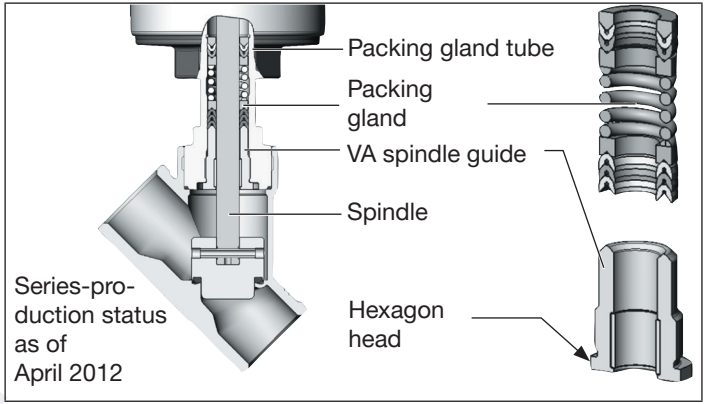

Fig. 32: Replacing packing gland (VA spindle guide)

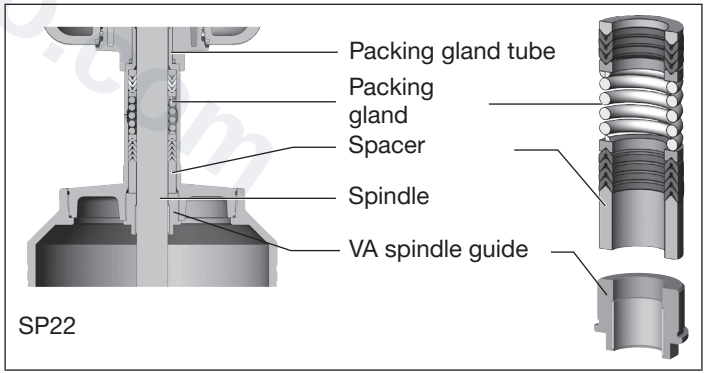

Fig. 33: Replacing the packing gland SP22

valvesgo.com

WARNING!

Risk of injury due to parts being ejected!

When the spindle opening is exposed, the individual parts of the packing gland will be pressed out at an undefined speed when the pilot air port is pressurised.

- Before pressurising with pilot air, safeguard the area around the outlet, (e.g. place spindle on a firm surface).

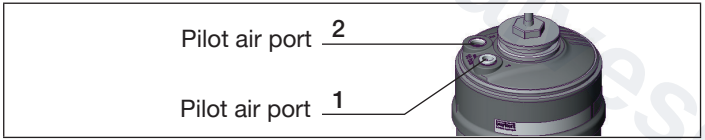

Fig. 34: Ports

→ Push the packing gland out:
For **control function A and I** pressurise the pilot air port **1** with 6–8 bar.
For **control function B** pressurise the pilot air port **2** with 6–8 bar.

→ Grease the individual parts of the new packing gland with the supplied lubricant.

→ Place individual parts on the spindle in the specified direction and sequence (see „Fig. 35“ or „Fig. 36“).

→ Push the packing gland into the packing gland tube.

If the valve is equipped with a PEEK spindle guide (SP10/SP14 series-production status up to April 2012), we recommend replacing it with a VA spindle guide (see „Tab. 29: VA spindle guide for packing gland“).

→ Lubricate the spindle guide thread (Klüberpaste UH1 96-402).

→ Screw spindle guide back in. Observe tightening torque (see „Tab. 23: Tightening torques spindle guide“).

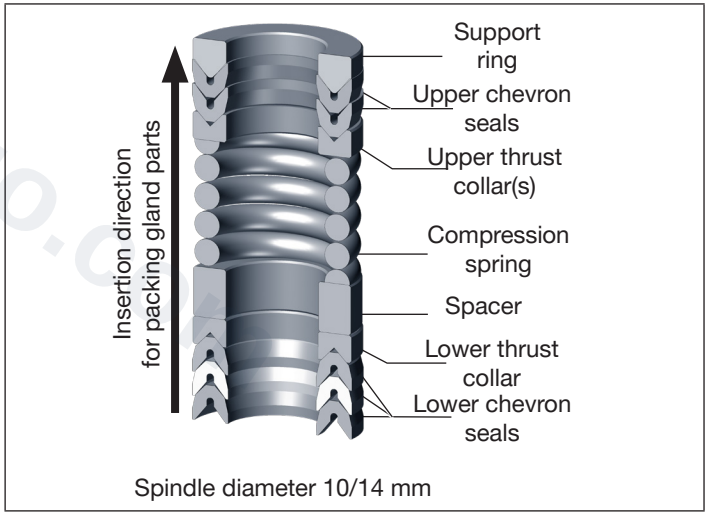

Fig. 35: Seal set for packing gland SP10/SP14

valvesgo.com

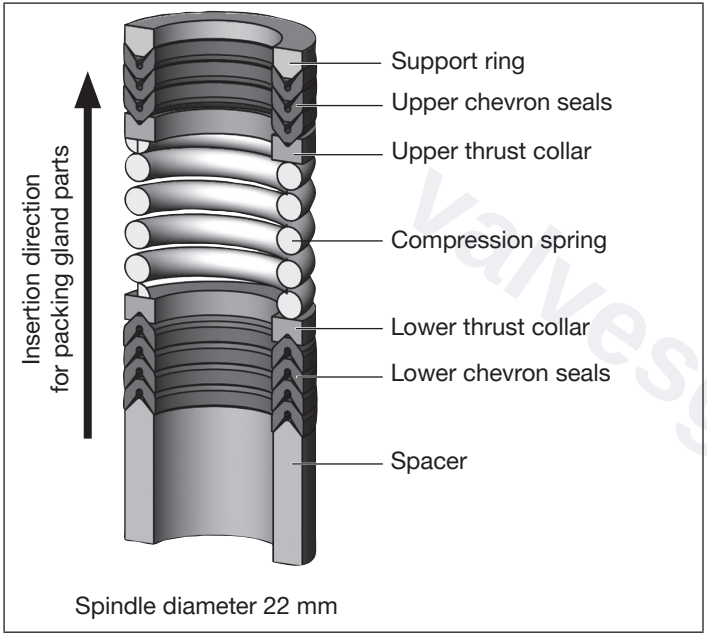

Fig. 36: Seal set for packing gland SP22

Tightening torques spindle guide			
Spindle diameter	**DN body**	**Spindle guide material**	**Tightening torque [Nm]**
10 mm		PEEK	6
	15	1.4401/1.4404/316L	15
	20/25		25
	32		50
14 mm		PEEK	15
	25	1.4401/1.4404/316L	25
	32–50		60
22 mm	65	1.4401/1.4404	60

Tab. 23: Tightening torques spindle guide

Mount control cone

→ Place new control cone on the spindle.

→ Align boreholes in the control cone and spindle.

→ Support control cone on the cylindrical part using a prism or something similar.

→ Set up the spring-type straight pin and carefully hammer it in.

→ Centre the spring-type straight pin with the spindle axis.

valvesgo.com

valvesgo.com

Install actuator (with control unit) on the valve body

→ Replace the seal if necessary.

WARNING!

Risk due to incorrect lubricants!

Unsuitable lubricant may contaminate the medium. There is a risk of explosion in oxygen applications!

- For specific applications, e.g. oxygen or analysis applications, use approved lubricants only.

→ Before re-installation, grease nipple thread of the actuator (e.g. using Klüberpaste UH1 96-402 from Klüber).

NOTE!

Damage to the seat seal or seat contour!

- When turning the actuator, the valve must be in the open position.

→ For **control function A**:
Without control unit: pressurise the pilot air port 1 with compressed air (5 bar): Valve opens.
With control unit: open the valve in accordance with the operating instructions of the control unit.

→ Screw actuator into the valve body.
Observe tightening torque (see „Tab. 24“).

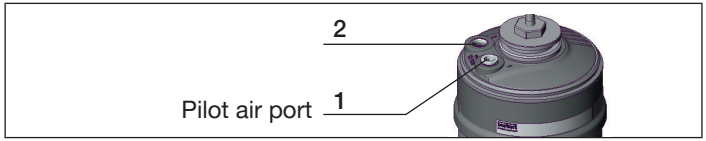

Fig. 37: Ports

Tightening torques valve body/nipple	
DN	**Tightening torque [Nm]**
15	45 ± 3
20	50 ± 3
25	60 ± 3
32	65 ± 3
40	
50	70 ± 3
65	100 ± 3

Tab. 24: Tightening torques valve body/nipple

If the position of the pilot air ports is unfavourable for installing the hoses, these can be seamlessly aligned by rotating the actuator by 360°.

The procedure is described in chapter „8.3.4 Turning actuator“.

11 FAULTS

Fault	Elimination
Actuator does not switch.	Pilot air port interchanged[12)] CFA: Connect pilot air port 1 CFB: Connect pilot air port 1 CFI Pilot air port 1: open Pilot air port 2: closing
	Pilot pressure too low See pressure information on the type label.
	Medium pressure too high See pressure information on the type label.
	Flow direction interchanged See arrow direction on the type label.

Tab. 25: Faults – 1

Fault	Elimination
Valve is not tight.	Dirt between seal and valve seat → Install dirt trap
	Valve seat seal worn → Install new control cone
	Flow direction interchanged See arrow direction on the type label.
	Medium pressure too high See pressure information on the type label.
	Pilot pressure too low See pressure information on the type label.
Valve is leaking on the relief bore.	Packing gland worn → Replace packing gland.

Tab. 26: Faults – 2

12) see „Fig. 24: Pneumatic connection“.

valvesgo.com

12 SPARE PARTS

WARNING

Risk of injury when opening the actuator!

The actuator contains a spring under tension. The spring that ejects when the actuator opens may cause injuries!

▸ The actuator must not be opened.

CAUTION!

Risk of injury and/or damage due to incorrect parts!

Incorrect accessories and unsuitable spare parts may cause injuries and damage to the device and the area around it

▸ Use only original accessories and original spare parts from Bürkert.

12.1 Replacement part set

Spare part sets for the angle-seat control valve Type 2300:

- Control cone set
  consists of control cone, spring-type straight pin, seal and lubricant.
- Seal set for packing gland
  consists of the individual parts of the packing gland, seal and lubricant
  (the modified socket wrench is not included in the seal set).
- Spindle guide for packing gland
  VA spindle guide, seal and lubricant

Control cone set			
DN	Actuator size [mm]	Order number	
		PTFE/steel	Steel/steel
15	50, 70	170 315	170 322
20	50, 70	170 316	170 323
25	50, 70, 90	170 318	170 324
32	70	170 319	170 325
	90, 130	226 941	226 925
40	90, 130	226 945	225 423
50	90, 130	226 948	225 426
65	130	226 950	225 427

Tab. 27: Control cone set

Seal set for packing gland				
Body DN	Actuator size [mm]	Order number		
		Standard device	Water variant	High temperature variant
15–32	50	216 436	372 658	372 659
	70			
25–50	90	216 438	372 656	372 657
	130			
65	130	252 545	–	200 23063

Tab. 28: Seal set for packing gland

valvesgo.com

VA spindle guide for packing gland			
Spindle ø	DN	Actuator size [mm]	Order number
10	15	50, 70	0024 6577
	20–25	50, 70	0024 6578
	32	70	0024 6582
14	20	90	6000 4091
	25	90	0024 6579
	32	90, 130	0024 6583
	40	90, 130	0024 6593
	50	90, 130	0024 6594
22	65	130	0025 2544

Tab. 29: VA spindle guide for packing gland

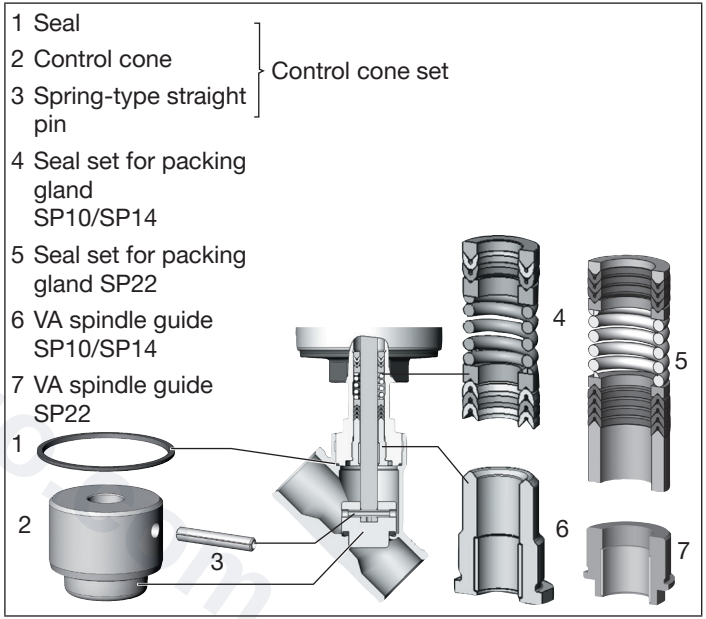

Fig. 38: Spare parts

valvesgo.com

valvesgo.com

12.2 Installation tools

Only for PEEK spindle guide: **Installation wrench for packing gland** (Series-production status up to April 2012)	
Installation wrench	**Order number**
Spindle diameter 10 mm	665 700
Spindle diameter 14 mm	665 701

Tab. 30: Installation wrench for PEEK spindle guide

Modified socket wrench for packing gland (Series-production status as of April 2012)				
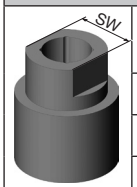	**Socket wrench**	**Body DN**	**AF**	**Order number**
	Spindle ø 10 mm	15	19	683 220
	Spindle ø 10 mm	20–32	21	683 222
	Spindle ø 14 mm	25–50	21	683 223

Tab. 31: Modified socket wrench

If you have any questions, please contact your Bürkert sales department.

13 TRANSPORT, STORAGE, PACKAGING

NOTE!

Transport damage!

Inadequately protected devices may be damaged during transport.

- Protect the device against moisture and dirt in shock-resistant packaging during transport.
- Avoid exceeding or dropping below the permitted storage temperature.

Incorrect storage may damage the device.

- Store the device in a dry and dust-free location!
- Storage temperature –20 – +65 °C.

Environmentally friendly disposal

- Follow national regulations regarding disposal and the environment.
- Collect electrical and electronic devices separately and dispose of them as special waste.

Further information country.burkert.com.

valvesgo.com

valvesgo.com

valvesgo.com

bürkert
FLUID CONTROL SYSTEMS

valvesgo.com

www.burkert.com

valvesgo.com