bürkert
FLUID CONTROL SYSTEMS

Pneumatically operated 2/2-way angle seat valve ELEMENT for decentralized automation

- High flow rates
- Long service life
- Easy integration of automation units with ELEMENT
- Flow-optimised stainless steel valve body with sleeve, clamp or weld connection
- Suitable for steam

Product variants described in the data sheet may differ from the product presentation and description.

Can be combined with

Type 8690
Pneumatic control unit for decentralised automation of process valves ELEMENT

Type 8691
Control head for decentralised automation of ELEMENT process valves

Type 8695
Control head for decentralised automation of ELEMENT process valves

Type 8697
Pneumatic control unit for decentralised automation of process valves ELEMENT

Type 8801
On/off valve systems ELEMENT with decentralised automation – overview

Type 8840
Modular process valve cluster – distributor and collector

Type description

The Type 2100 angle seat valve is specially optimised for decentralized process automation and fulfils the tough criteria in process environments. Its unique design allows easy the integration of automation units in all expansion stages, from electrical/optical position feedback to pneumatic control and integrated fieldbus interface. Maximum service life and tightness are achieved by the proven self-adjusting v-seal packing gland. The highly integrated system of valve and automation unit is characterised by its compact and smooth design, integrated pilot air ducts, protection classes IP65/67, NEMA Type 4X and high resistance to chemicals.

DTS 1000496321 EN Version: - Status: RL (released | freigegeben | valide) printed: 07.10.2026

© Christian Bürkert GmbH & Co. KG, Subject to alteration

valvesgo.com

Table of contents

1. General technical data 4

2. Control functions 5

3. Approvals and conformities 6

3.1. General notes 6
3.2. Conformity 6
3.3. Standards 6
3.4. Explosion protection 6
3.5. Drinking water 6
3.6. Foods and beverages/Hygiene 7
3.7. Others 7
DNV classification 7
Oxygen 7
Fuel gases 7
TA Luft 7

4. Materials 8

4.1. Bürkert resistApp 8
4.2. Material specifications 8

5. Dimensions 9

5.1. Actuator 9
Valve system on/off ELEMENT 10
5.2. Body with internal threaded connection 11
5.3. Body with welded connection 12
5.4. Body with clamp connection 13

6. Performance specifications 14

6.1. Fluidic data 14
Overview of fluidic data for flow below seat (for liquids, steam and gases) 14
Pilot pressure diagrams for flow direction below seat (Control function B) 18
Overview of fluidic data with flow above seat (for steam and gases) 19
Pilot pressure diagram for flow direction above seat (control function A) 20
6.2. Operating limits 21
Operating limits for medium temperature and operating pressure 21
Operating limits for ambient and medium temperature 22
Operating limits for optional variants 22

7. Product accessories 23

8. Networking and combination with other Bürkert products 24

DTS 1000496321 EN Version: - Status: RL (released | freigegeben | valide) printed: 07.10.2026

valvesgo.com

valvesgo.com

9. Ordering information **25**

9.1. Bürkert eShop 25
9.2. Bürkert product filter 25
9.3. Bürkert Product Enquiry Form 25
9.4. Ordering chart variant with internal threaded 26
Valves with flow direction below seat 26
Valves with flow direction above seat 29
9.5. Ordering chart variant with welded 30
Valves with flow direction below seat 30
Valves with flow direction above seat 32
9.6. Ordering chart variant with clamp connection 33
Valves with flow direction below seat 33
Valves with flow direction above seat 34

DTS 1000496321 EN Version: - Status: RL (released | freigegeben | valide) printed: 07.10.2026

valvesgo.com

valvesgo.com

1. General technical data

Product properties	
Dimensions	Further information can be found in chapter "5. Dimensions" on page 9.
Material	Further information can be found in chapter "4. Materials" on page 8.
Design	Angle seat valve
Nominal diameter (port connection)	DN 8...DN 80, NPS ¼...NPS 3
Safety setting in case of power failure	Normally closed (control function A), normally open (control function B)
Flow direction	Flow to open (below seat), flow to close (above seat)
Performance data	
Operating pressure	0 bar(g)...25 bar(g), vacuum down to - 0.9 bar(g) (option) (see "6.1. Fluidic data" on page 14)
Nominal pressure	PN 25 (DIN EN 1333), Class 150 (DIN EN 1759)
Pilot pressure	2.5 bar(g)...10 bar(g) (see "6.1. Fluidic data" on page 14)
Seat leakage	Leakage rate A (DIN EN 12266 - 1), seat seal PTFE and PEEK, test medium air
K_V value	1.6 m³/h...140 m³/h (see "6.1. Fluidic data" on page 14)
Medium data	
Operating medium	Steam, water, neutral gases, alcohols, oils, fuels, hydraulic fluids, salt solutions, alkalis, organic solvents, oxygen and fuel gases of families I, II and III in accordance with the Gas Appliances Regulation (EU) 2016/426
Medium temperature	- 40 °C...+ 230 °C (see "6.2. Operating limits" on page 21)
Viscosity	Max. 600 mm²/s
Control medium	Air, neutral gases
Product connections	
Port connection	
Internal threaded connection	G (DIN ISO 228 - 1) NPT (ASME B1.20.1) RC (ISO 7 - 1)
Welded connection	DIN EN ISO 1127 / ISO 4200 / DIN 11866 series B DIN 11850 series 2 / DIN 11866 series A / DIN EN 10357 series A ASME BPE / DIN 11866 series C SMS 3008
Clamp connection	DIN 32676 series B (pipe: ISO 4200) DIN 32676 series A (pipe: DIN 11850 series 2 / DIN EN 10357 series A) ASME BPE
Pilot air port	Push-in connector (external Ø 6 mm or ¼") or internal thread G ⅛" (on request)
Approvals and conformities	
Further information can be found in chapter "3. Approvals and conformities" on page 6.	
Material certificate	2.2, 3.1
Environment and installation	
Environmental factors	Protect the device from electromagnetic interference, UV radiation and, when used outdoors, from weather conditions.
Ambient temperature	- 10 °C...+ 100 °C (see "6.2. Operating limits" on page 21)
Degree of protection	IP65/67
Installation position	As required, preferably with actuator in upright position

DTS 1000496321 EN Version: - Status: RL (released | freigegeben | valide) printed: 07.10.2026

valvesgo.com

valvesgo.com

2. Control functions

⚠ WARNING

Risk of injury due to bursting pipes and bursting equipment when the flow is above the seat.
In the case of liquid mediums, water hammer can occur causing pipes and the device to burst.

Do not use valves with flow above the seat for liquid mediums.

Symbol	Description	
Flow direction below seat for liquids, steam and gases		
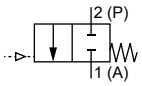	**Control function A (CF A)** Pneumatically operated 2/2-way on/off valve Flow direction below seat Normally closed by spring force	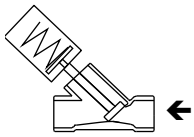
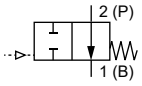	**Control function B (CF B)** Pneumatically operated 2/2-way on/off valve Flow direction below seat Normally opened by spring force	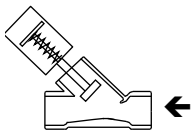
Flow direction above seat for steam and gases		
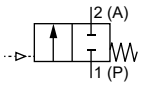	**Control function A (CF A)** Pneumatically operated 2/2-way on/off valve Flow direction above seat Normally closed by spring force	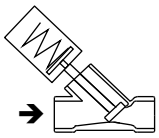
3-position actuator		
Flow direction below seat For valves with 3-position actuator an adjustable middle position is possible (option)		
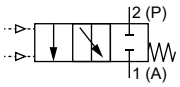	**Control function A (CF A)** Pneumatically operated 2/3-way position valve Flow direction below seat Normally closed by spring force	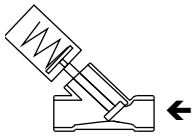

DTS 1000496321 EN Version: - Status: RL (released | freigegeben | valide) printed: 07.10.2026

valvesgo.com

3. Approvals and conformities

3.1. General notes

- The approvals and conformities listed below must be stated when making enquiries. This is the only way to ensure that the product complies with all required specifications.
- Not all available variants can be supplied with the below mentioned approvals or conformities.

3.2. Conformity

In accordance with the Declaration of Conformity, the product is compliant with the EU Directives. This includes the following directives:

- Pressure Equipment Directive 2014/68/EU
- Machinery Directive 2006/42/EC

3.3. Standards

The applied standards which are used to demonstrate compliance with the EU Directives are listed in the EU-Type Examination Certificate and/or the EU Declaration of Conformity.

3.4. Explosion protection

Approval	Description
	Optional: Explosion protection (valid for the variable code PX51) As a category 2 device suitable for zone 1/21 and zone 2/22. **ATEX:** EPS 18 ATEX 2 008 X II 2G Ex h IIC T4...T2 Gb II 2D Ex h IIIC T135 °C...T300 °C Db **IECEx:** IECEx EPS 18.0007X Ex h IIC T4...T2 Gb Ex h IIIC T135 °C...T300 °C Db

Temperature class	T2	T3	T4
Maximum surface temperature	+ 300 °C	+ 200 °C	+ 135 °C
Ambient temperature	- 40 °C...+ 130 °C	- 40 °C...+ 130 °C	- 40 °C...+ 100 °C
Maximum medium temperature	+ 285 °C	+ 185 °C	+ 125 °C

Note: The ambient and medium temperature range may be limited by non-ex-relevant specifications. Observe the Operating Instructions.

3.5. Drinking water

Conformity	Description
H_2O	**Suitable for use in drinking water applications** The materials comply with the assessment principles (UBA) for materials in contact with drinking water (TrinkwasserV). **Stainless steel body** PF39: Suitable for products with medium temperature up to 85 °C (hot water)

DTS 1000496321 EN Version: - Status: RL (released | freigegeben | valide) printed: 07.10.2026

valvesgo.com

3.6. Foods and beverages/Hygiene

Conformity	Description
FDA	**FDA – Code of Federal Regulations (valid for the variable code PL02, PL03)** All wetted materials are compliant with the Code of Federal Regulations published by the FDA (Food and Drug Administration, USA) according to the manufacturer's declaration.
USP	**United States Pharmacopeial Convention (USP) (valid for the variable code PL04)** All wetted materials are biocompatible according to the manufacturer's declaration.
	EC Regulation 1935/2004 of the European Parliament and of the Council (valid for the variable code PL01, PL02) All wetted materials are compliant with EC Regulation 1935/2004/EC according to the manufacturer's declaration.
	China food GB Standards of the People's Republic of China (valid for the variable code PL10) All wetted materials are compliant with the requirement of China food GB Standards according to the manufacturer's declaration.

3.7. Others

DNV classification

Approval	Description
TYPE APPROVED PRODUCT DNV DNV.COM/AF	**DNV classification – Ships, offshore units, and high speed and light craft** The products are approved for installation on all vessels classed by DNV.

Oxygen

Conformity	Description
O_2	**Optional: Suitability for oxygen (valid for the variable code NL02)** The products are suitable for use with gaseous oxygen, according to the manufacturer's declaration.

Fuel gases

Conformity	Description
CE	**Fuel gases (valid for the variable code PO19, PO20)** The products comply with: • Regulation (EU) 2016/426 – Appliances burning gaseous fuels and • DVGW DIN EN 161 (Automatic shut-off valves for gas burners and gas appliances) and • DIN EN 16678, Class A or Class D (Safety and control devices for gas burners and gas burning appliances – Automatic shut-off valves for operating pressure of above 500 kPa up to and including 6 300 kPa)

TA Luft

Conformity	Description
TA Luft	**Technical instruction on air quality control (valid for the variable code PM01)**

DTS 1000496321 EN Version: - Status: RL (released | freigegeben | valide) printed: 07.10.2026

valvesgo.com

4. Materials

4.1. Bürkert resistApp

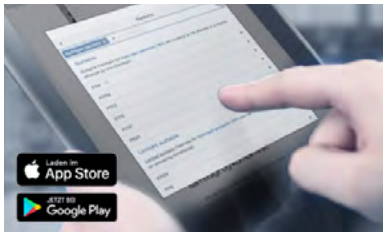

Bürkert resistApp – Chemical resistance chart

You want to ensure the reliability and durability of the materials in your individual application case? Verify your combination of media and materials on our website or in our resistApp.

Start chemical resistance check

4.2. Material specifications

Note:
The lubricants for packing gland and actuator are classified according to NSF H1.

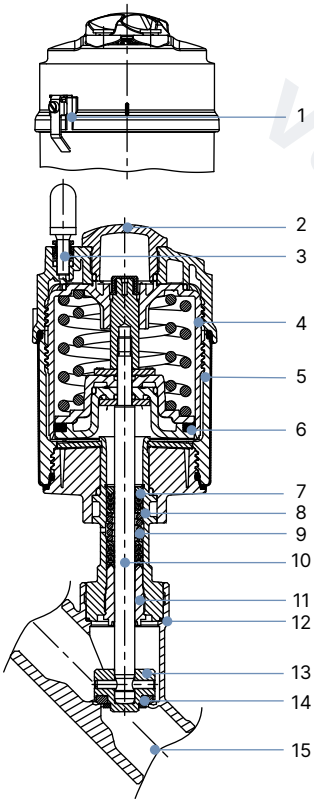

No.	Element	Material
1	Ground terminal	Stainless steel 1.4301/1.4305 only for ATEX variant
2	Optical position indicator	Optical position indicator Polysulfone PSU
3	Pilot air ports	Push-in connector PP (Standard) On request: Thread G ⅛" Stainless steel 1.4305
4	Actuator cover	PPS
5	Actuator casing	Stainless steel 1.4561 (316Ti)
6	Piston seal	FKM
7	Spring	Stainless steel 1.4310
8	Pipe	Stainless steel 1.4401 (316)/1.4404 (316L)
9	Packing gland	PTFE V-Rings (filled), with spring compensation
10	Spindle	Stainless steel 1.4401 (316)/1.4404 (316L)
11	Spindle guide	PEEK
12	Body seal	Graphite, PTFE (Option)
13	Swivel plate	Stainless steel 1.4401 (316)/1.4404 (316L)
14	Seat seal	PTFE, PEEK (Option)
15	Valve body	Stainless steel CF3M

DTS 1000496321 EN Version: - Status: RL (released | freigegeben | valide) printed: 07.10.2026

valvesgo.com

5. Dimensions

5.1. Actuator

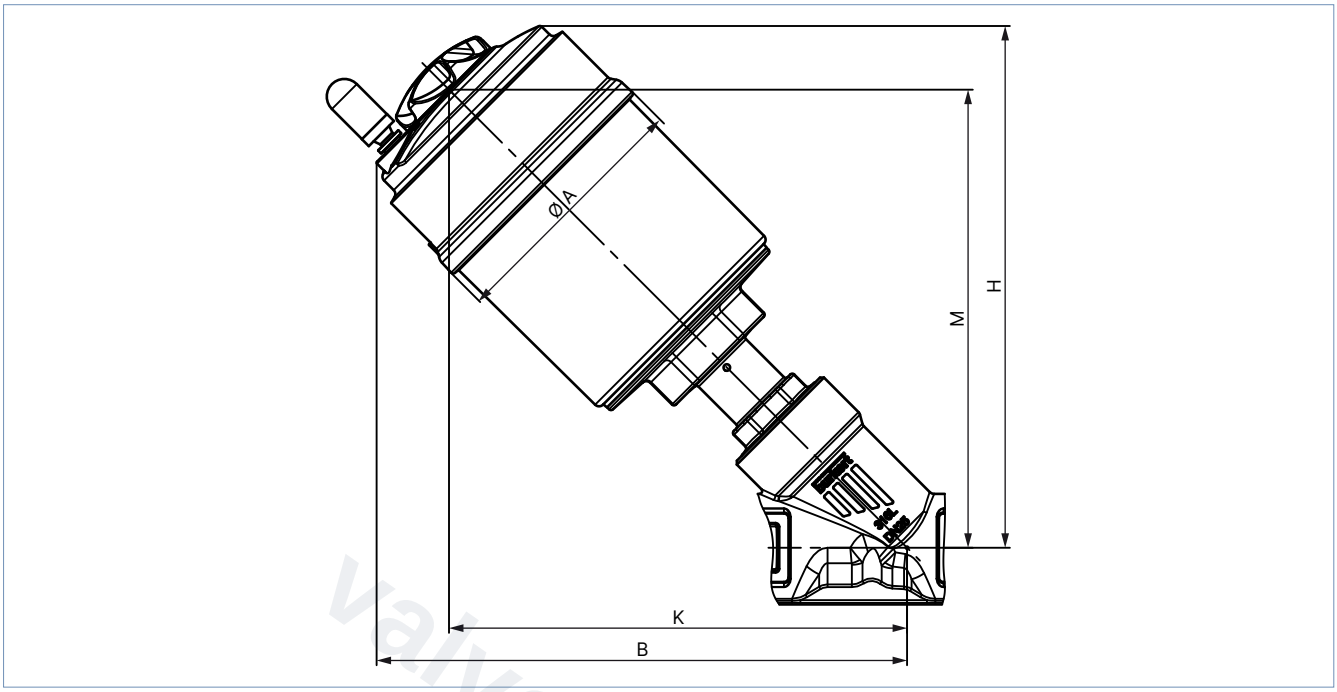

Nominal diameter (port connection)		Actuator size Ø	Ø A	B 1.)	H 1.)	K/M 1.)
DN	NPS	[mm]	[mm]	[mm]	[mm]	[mm]
8	⅜	50 (D)	64.5	166	163	147
		70 (M)	91	182	178	156
10	⅜	50 (D)	64.5	166	163	147
		70 (M)	91	182	178	156
15	½	50 (D)	64.5	166	163	147
		70 (M)	91	182	178	156
20	¾	50 (D)	64.5	174	171	155
		70 (M)	91	189	186	163
25	1	50 (D)	64.5	175	173	156
		70 (M)	91	191	188	165
		90 (N)	120	229	228	203
32	1¼	70 (M)	91	201	197	174
		90 (N)	120	243	242	217
		130 (P)	159	293	293	254
40	1½	70 (M)	91	204	201	178
		90 (N)	120	246	245	220
		130 (P)	159	296	296	257
50	2	70 (M)	91	223	219	196
		90 (N)	120	262	261	236
		130 (P)	159	312	312	273
65	2½	90 (N)	120	274	273	248
		130 (P)	159	324	324	285
80	3	130 (P)	159	344	344	305

1.) The dimensions for B, H, K and M are maximum dimensions and may be up to 6 mm less, depending on the connection orifice size and standard.

DTS 1000496321 EN Version: - Status: RL (released | freigegeben | valide) printed: 07.10.2026

valvesgo.com

Valve system on/off ELEMENT

Actuator with control head and pneumatic controls/position feedback

Note:

- Further information can be found in chapter "7. Product accessories" on page 23.
- Dimensions in mm, unless otherwise stated

Control head

Type 8691	Type 8695
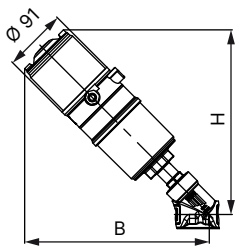	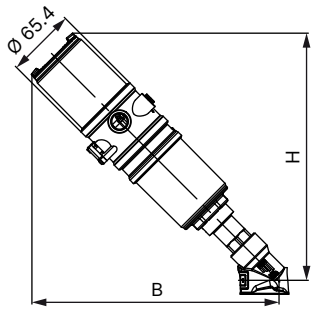

Pneumatic control unit/Position feedback

Type 8690	Type 8697
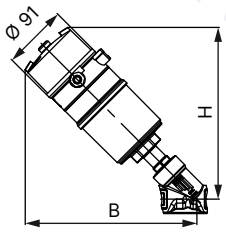	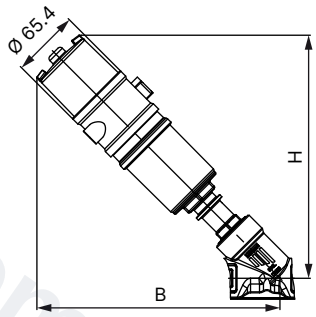

Nominal diameter (port connection)		Actuator size Ø	B/H [1.)] with	
DN	NPS	[mm]	Type 8690 or Type 8697	Type 8691 or Type 8695
8	⅜	50 (D)	226	239
		70 (M)	232	256
10	⅜	50 (D)	226	239
		70 (M)	232	256
15	½	50 (D)	226	239
		70 (M)	232	256
20	¾	50 (D)	234	247
		70 (M)	240	264
25	1	50 (D)	236	249
		70 (M)	242	266
		90 (N)	276	303
32	1¼	70 (M)	252	275
		90 (N)	294	318
		130 (P)	328	353
40	1½	70 (M)	255	279
		90 (N)	297	321
		130 (P)	334	358
50	2	70 (M)	274	297
		90 (N)	313	337
		130 (P)	351	374

DTS 1000496321 EN Version: - Status: RL (released | freigegeben | valide) printed: 07.10.2026

valvesgo.com

valvesgo.com

Nominal diameter (port connection)		Actuator size Ø	B/H[1.)] with	
DN	NPS	[mm]	Type 8690 or Type 8697	Type 8691 or Type 8695
65	2½	90 (N)	325	349
		130 (P)	362	386
80	3	130 (P)	382	406

1.) The dimensions for B, H, K and M are maximum dimensions and may be up to 6 mm less, depending on the connection orifice size and standard.

5.2. Body with internal threaded connection

Note:
Dimensions in mm, unless otherwise stated

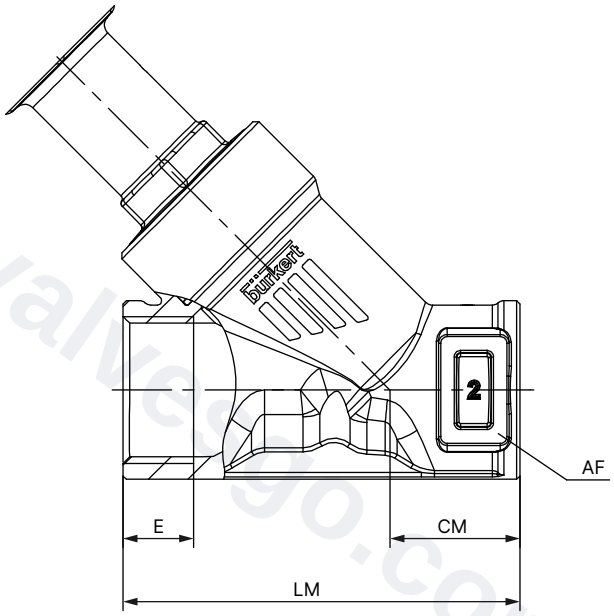

Nominal diameter (port connection)		G (DIN ISO 228 - 1) NPT (ASME B1.20.1) RC (ISO 7 - 1)					
		E			CM	LM	AF
DN	NPS	G	NPT	RC			
8	¼	14	10	9.7	24	75	–
10	⅜	12	10.3	10.1	24	65	27
15	½	14	13.7	13.2	24	65	27
20	¾	16	14.0	14.5	27	75	34
25	1	18	16.8	16.8	29.5	90	41
32	1¼	16	17.3	19.1	36	110	50
40	1½	18	17.3	19.1	35	120	55
50	2	24	17.6	23.4	45	150	70
65	2½	26	23.7	26.7	57	185	85
80	3	28	–	–	71	220	100

DTS 1000496321 EN Version: - Status: RL (released | freigegeben | valide) printed: 07.10.2026

valvesgo.com

5.3. Body with welded connection

Note:
Dimensions in mm, unless otherwise stated

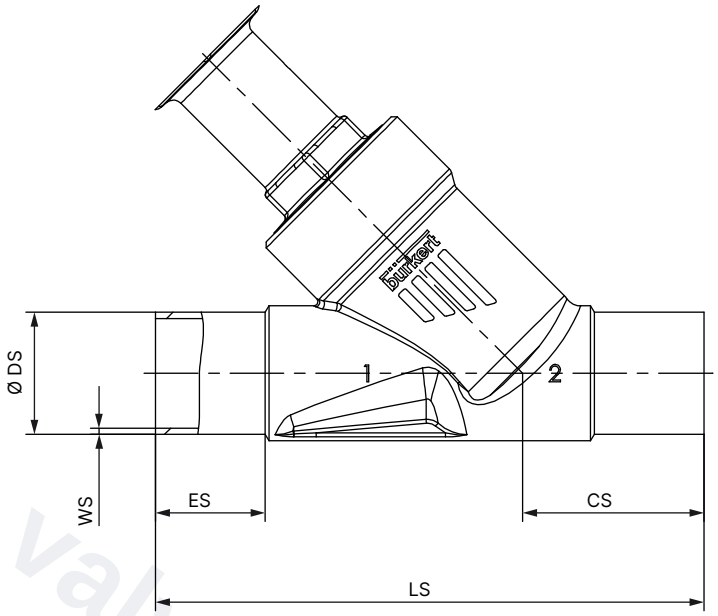

Nominal diameter (port connection)	DIN EN ISO 1127 / ISO 4200 / DIN 11866 series B					DIN 11850 series 2 / DIN 11866 series A / DIN EN 10357 series A				
DN	ES	CS	LS	Ø DS	WS	ES	CS	LS	Ø DS	WS
8	20	34	100	13.5	1.6	–	–	–	–	–
10	20	34	100	17.2	1.6	30	46	135	13	1.5
15	19	34	100	21.3	1.6	19	34	100	19	1.5
20	20	39	115	26.9	1.6	20	39	115	23	1.5
25	26	43	130	33.7	2.0	26	43	130	29	1.5
32	26	45	145	42.4	2.0	26	45	145	35	1.5
40	26	49	160	48.3	2.0	26	49	160	41	1.5
50	26	50	175	60.3	2.0	26	50	175	53	1.5
65	26	50	210	76.1	2.3	26	50	210	70	2
80	26	88.5	266	88.9	2.3	26	88.5	266	85	2

Nominal diameter (port connection)	ASME BPE / DIN 11866 series C				
NPS	ES	CS	LS	Ø DS	WS
½	30	46	135	12.7	1.65
¾	30	52	145	19.05	1.65
1	30	51	152	25.4	1.65
1½	30	60	182	38.1	1.65
2	30	64	210	50.8	1.65
2½	26	56	230	63.5	1.65
3	26	88.5	266	76.2	1.65

DTS 1000496321 EN Version: - Status: RL (released | freigegeben | valide) printed: 07.10.2026

valvesgo.com

5.4. Body with clamp connection

Note:
Dimensions in mm, unless otherwise stated

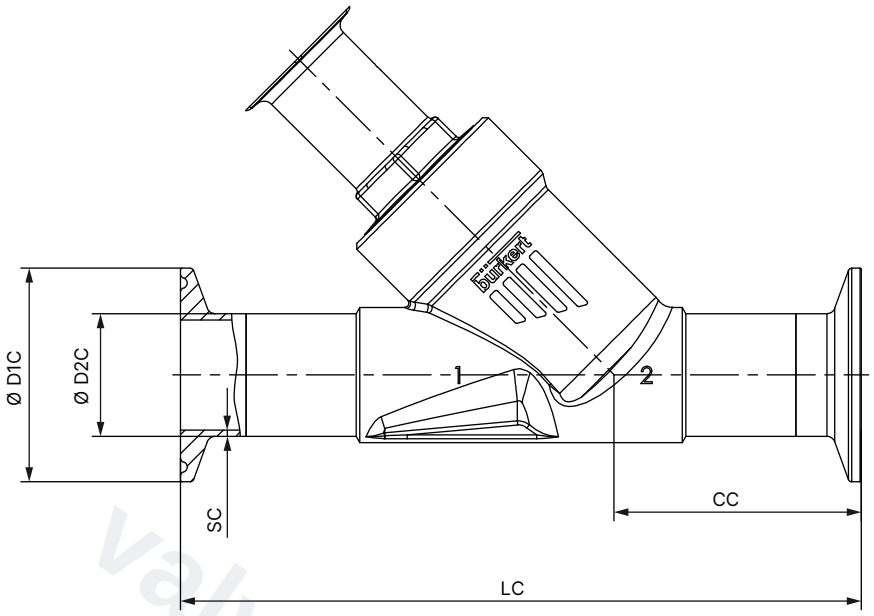

Nominal diameter (port connection)	Clamp: DIN 32676 series B Pipe: DIN EN ISO 1127 / ISO 4200 / DIN 11866 series B					Clamp: DIN 32676 series A (DN 15 similar DIN 32676 B) Pipe: DIN 11850 series 2 / DIN 11866 series A / DIN EN 10357 series A				
DN	**LC**	**CC**	**Ø D1 C**	**Ø D2 C**	**SC**	**LC**	**CC**	**Ø D1 C**	**Ø D2 C**	**SC**
15	156	49.0	50.5	21.3	1.6	130	49.5	34.0	19	1.5
20	150	56.5	50.5	26.9	1.6	150	57.0	34.0	23	1.5
25	160	58.0	50.5	33.7	2.0	160	58.5	50.5	29	1.5
32	200	57.5	50.5	42.4	2.0	180	58.0	50.5	35	1.5
40	200	69.0	64.0	48.3	2.0	200	69.5	50.5	41	1.5
50	230	77.5	77.5	60.3	2.6	230	78.0	64.0	53	1.5

Nominal diameter (port connection)	Clamp: ASME BPE Pipe: ASME BPE / DIN 11866 series C				
NPS	**LC**	**CC**	**Ø D1 C**	**Ø D2 C**	**SC**
½	130	49.0	25.0	12.7	1.65
¾	150	56.5	25.0	19.05	1.65
1	160	58.0	50.5	25.4	1.65
1½	200	69.0	50.5	38.1	1.65
2	230	77.5	64.0	50.8	1.65

DTS 1000496321 EN Version: - Status: RL (released | freigegeben | valide) printed: 07.10.2026

valvesgo.com

6. Performance specifications

6.1. Fluidic data

Overview of fluidic data for flow below seat (for liquids, steam and gases)

Note:

- K_V value [m³/h]: Measured with water at + 20 °C, 1 bar(g) pressure at valve inlet and free outlet
- Pressure data [bar(g)]: Overpressure to atmospheric pressure

Internal threaded connection G, NPT and RC

Nominal diameter (port connection)		Seat size	Actuator size Ø	K_V value water	Pilot pressure min.	Operating pressure max.		
						CF A		CF B
						Seat seal		
						PTFE	PEEK	PTFE
DN	NPS	DN	[mm]	[m³/h]	[bar(g)]	[bar(g)]	[bar(g)]	[bar(g)]
8	¼	15	50 (D)	2.6	5.2	25	25	25
			70 (M)	2.6	4.8	25	25	25
10	⅜		50 (D)	5.3	5.2	25	25	25
			70 (M)	5.4	4.8	25	25	25
15	½		50 (D)	5.3	5.2	25	25	25
			70 (M)	5.4	4.8	25	25	25
20	¾	20	50 (D)	10	5.2	16	13.5	25
			70 (M)	11	4.8	25	25	25
25	1	25	50 (D)	15	5.2	9	7.5	25
			70 (M)	20	4.8	16	13.5	25
			90 (N)	21	5	25	25	25
32	1¼	32	70 (M)	30	4.8	8.5	–	25
			90 (N)	30	5	25	19.5	25
			130 (P)	32	5	–	25	–
40	1½	40	70 (M)	40	4.8	6	–	25
			90 (N)	44	5	16	13.5	25
			130 (P)	47	5	25	23	25
50	2	50	70 (M)	49	4.8	4	–	16
			90 (N)	55	5	10	8	25 (20 [1.)])
			130 (P)	62	5	25 (20 [1.)])	23 (20 [1.)])	25 (20 [1.)])
65	2½	65	90 (N)	91	5	5	–	14
			130 (P)	91	5.6	16 (15 [1.)])	12.5	16 (15 [1.)])
80	3	80	130 (P)	140	5.6	10	8	11

1.) According to pressure equipment directive 2014/68/EU for compressible fluids of group 1 (dangerous gases and vapours according to Article 4, paragraph (1), c), i), first indent)

DTS 1000496321 EN Version: - Status: RL (released | freigegeben | valide) printed: 07.10.2026

valvesgo.com

valvesgo.com

Welded connection DIN 11850 series 2, DIN 11866 series A, DIN EN 10357 series A

Nominal diameter (port connection)		Seat size	Actuator size Ø	K_V value water	Pilot pressure min.	Operating pressure max.		
						CF A		CF B
						Seat seal		
						PTFE	PEEK	PTFE
DN	NPS	DN	[mm]	[m³/h]	[bar(g)]	[bar(g)]	[bar(g)]	[bar(g)]
10	⅜	15	50 (D)	2.5	5.2	25	25	25
			70 (M)	2.5	4.8	25	25	25
15	½		50 (D)	5.3	5.2	25	25	25
			70 (M)	5.4	4.8	25	25	25
20	¾	20	50 (D)	10	5.2	16	13.5	25
			70 (M)	11	4.8	25	25	25
25	1	25	50 (D)	14	5.2	9	–	25
			70 (M)	18	4.8	16	13.5	25
			90 (N)	20	5	25	25	25
32	1¼	32	70 (M)	26	4.8	8.5	–	25
			90 (N)	28	5	25	19.5	25
			130 (P)	30	5	–	25	–
40	1½	40	70 (M)	35	4.8	6	–	25
			90 (N)	38	5	16	13.5	25
			130 (P)	41	5	25	23	25
50	2	50	70 (M)	49	4.8	4	–	16
			90 (N)	55	5	10	8	25 (20 [1.)])
			130 (P)	60	5	25 (20 [1.)])	23 (20 [1.)])	25 (20 [1.)])
65	2½	65	90 (N)	91	5	5	–	14
			130 (P)	91	5.6	16 (15 [1.)])	12.5	16 (15 [1.)])
80	3	80	130 (P)	140	5.6	10	8	11

1.) According to pressure equipment directive 2014/68/EU for compressible fluids of group 1 (dangerous gases and vapours according to Article 4, paragraph (1), c), i), first indent)

DTS 1000496321 EN Version: - Status: RL (released | freigegeben | valide) printed: 07.10.2026

valvesgo.com

valvesgo.com

Welded connection ISO 4200, DIN EN ISO 1127, DIN 11866 series B / Flange DIN EN 1092 - 1 (PN 25)

Nominal diameter (port connection)		Seat size	Actuator size Ø	K_V value water	Pilot pressure min.	Operating pressure max.		
						CF A		CF B
						Seat seal		
						PTFE	PEEK	PTFE
OD [mm]	NPS	DN	[mm]	[m³/h]	[bar(g)]	[bar(g)]	[bar(g)]	[bar(g)]
13.5	–	15	50 (D)	2.6	5.2	25	25	25
			70 (M)	2.6	4.8	25	25	25
17.2			50 (D)	5.3	5.2	25	25	25
			70 (M)	5.4	4.8	25	25	25
21.3			50 (D)	5.3	5.2	25	25	25
			70 (M)	5.4	4.8	25	25	25
26.9		20	50 (D)	10	5.2	16	13.5	25
			70 (M)	11	4.8	25	25	25
33.7		25	50 (D)	15	5.2	9	–	25
			70 (M)	20	4.8	16	13.5	25
			90 (N)	21	5	25	25	25
42.4		32	70 (M)	26	4.8	8.5	–	25
			90 (N)	28	5	25	19.5	25
			130 (P)	30	5	–	25	–
48.3		40	70 (M)	40	4.8	6	–	25
			90 (N)	44	5	16	13.5	25
			130 (P)	47	5	25	23	25
60.3		50	70 (M)	49	4.8	4	–	16
			90 (N)	55	5	10	8	25 (20 [1.)])
			130 (P)	60	5	25 (20 [1.)])	23 (20 [1.)])	25 (20 [1.)])
76.1		65	90 (N)	91	5	5	–	14
			130 (P)	91	5.6	16 (15 [1.)])	12.5	16 (15 [1.)])
88.9		80	130 (P)	140	5.6	10	8	11

1.) According to pressure equipment directive 2014/68/EU for compressible fluids of group 1 (dangerous gases and vapours according to Article 4, paragraph (1), c), i), first indent)

DTS 1000496321 EN Version: - Status: RL (released | freigegeben | valide) printed: 07.10.2026

valvesgo.com

Welded connection ASME BPE, DIN 11866 series C / Clamp ASME BPE

Nominal diameter (port connection)		Seat size	Actuator size Ø	K_V value water	Pilot pressure min.	Operating pressure max.		
						CF A		CF B
						Seat seal		
						PTFE	PEEK	PTFE
DN	NPS	DN	[mm]	[m³/h]	[bar(g)]	[bar(g)]	[bar(g)]	[bar(g)]
15	½	15	50 (D)	1.6	5.2	25	25	25
			70 (M)	1.6	4.8	25	25	25
20	¾	20	50 (D)	8.4	5.2	16	13.5	25
			70 (M)	9.4	4.8	25	25	25
25	1	25	50 (D)	13	5.2	9	–	25
			70 (M)	16	4.8	16	13.5	25
			90 (N)	16	5	25	25	25
40	1½	40	70 (M)	35	4.8	6	–	25
			90 (N)	38	5	16	13.5	25
			130 (P)	41	5	25	23	25
50	2	50	70 (M)	49	4.8	4	–	16
			90 (N)	55	5	10	8	25 (20 [1.)])
			130 (P)	58	5	25 (20 [1.)])	23 (20 [1.)])	25 (20 [1.)])
65	2½	65	90 (N)	85	5	5	–	14
			130 (P)	85	5.6	16 (15 [1.)])	12.5	16 (15 [1.)])
80	3		90 (N)	91	5	5	–	14
			130 (P)	91	5.6	16 (15 [1.)])	12.5	16 (15 [1.)])
80	3	80	130 (P)	140	5.6	10	8	11

1.) According to pressure equipment directive 2014/68/EU for compressible fluids of group 1 (dangerous gases and vapours according to Article 4, paragraph (1), c), i), first indent)

DTS 1000496321 EN Version: - Status: RL (released | freigegeben | valide) printed: 07.10.2026

valvesgo.com

valvesgo.com

Pilot pressure diagrams for flow direction below seat (Control function B)

Actuator size Ø 50 mm
Maximum control pressure 10 bar(g)

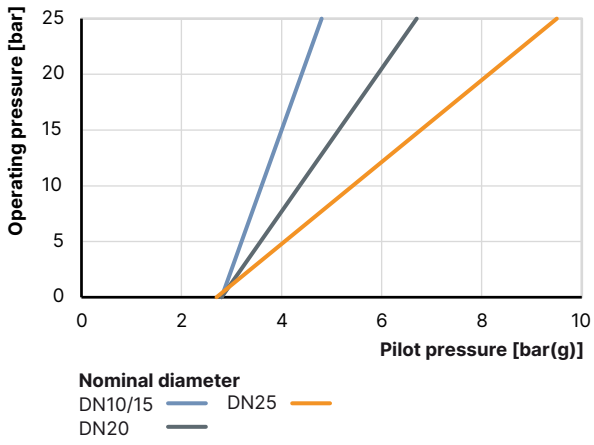

Actuator size Ø 70 mm
Maximum control pressure 10 bar(g)

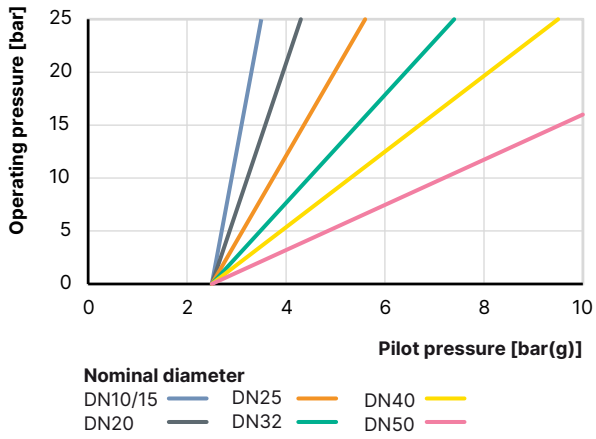

Actuator size Ø 90 mm
Maximum control pressure 10 bar(g)

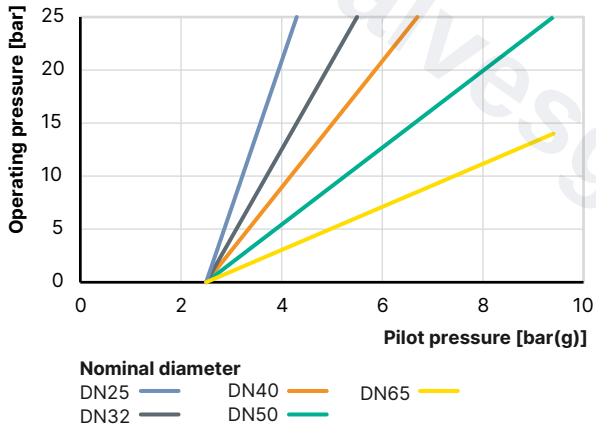

Actuator size Ø 130 mm
Maximum control pressure 7 bar(g)

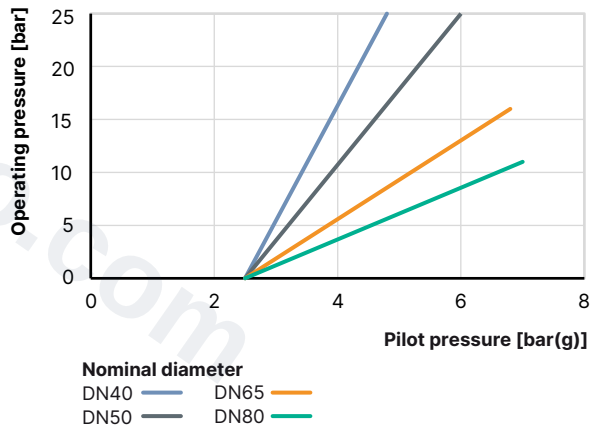

DTS 1000496321 EN Version: - Status: RL (released | freigegeben | valide) printed: 07.10.2026

valvesgo.com

Overview of fluidic data with flow above seat (for steam and gases)

Note:

- K_V value [m³/h]: Measured with water at + 20 °C, 1 bar(g) pressure at valve inlet and free outlet
- K_V value water: see **"Overview of fluidic data for flow below seat (for liquids, steam and gases)" on page 14**
- Pressure data [bar(g)]: Overpressure to atmospheric pressure

⚠ WARNING

Risk of injury due to bursting pipes and bursting equipment when the flow is above the seat.
In the case of liquid mediums, water hammer can occur, causing pipes and the device to burst.

Do not use valves with flow above the seat for liquid mediums.

Nominal diameter (port connection)	Actuator size Ø	Operating pressure max.
		CF A
		PTFE
DN	[mm]	[bar(g)]
15	50 (D)	16
	70 (M)	16
20	50 (D)	16
	70 (M)	16
25	50 (D)	16
	70 (M)	16
32	70 (M)	16
40	70 (M)	16
	90 (N)	16
50	70 (M)	12
	90 (N)	16
65	90 (N)	8

DTS 1000496321 EN Version: - Status: RL (released | freigegeben | valide) printed: 07.10.2026

valvesgo.com

valvesgo.com

Pilot pressure diagram for flow direction above seat (control function A)

Actuator size Ø 50 mm
Maximum control pressure 10 bar(g)

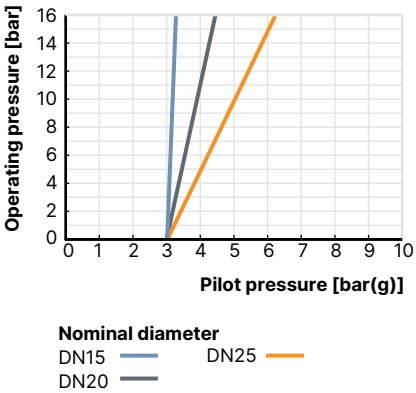

Actuator size Ø 70 mm
Maximum control pressure 10 bar(g)

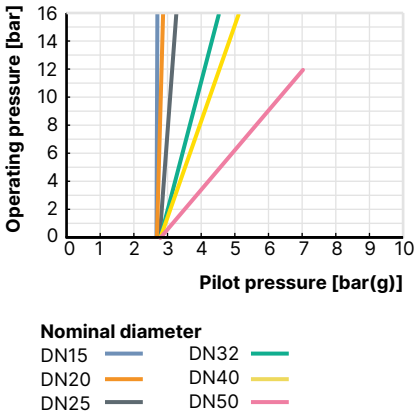

Actuator size Ø 90 mm
Maximum control pressure 10 bar(g)

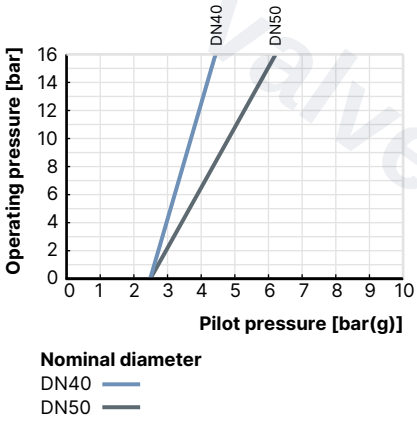

DTS 1000496321 EN Version: - Status: RL (released | freigegeben | valide) printed: 07.10.2026

valvesgo.com

6.2. Operating limits

Operating limits for medium temperature and operating pressure

In addition to the maximum operating pressures, the operating range of Bürkert process valves is limited by the nominal pressure according to the relevant standard.

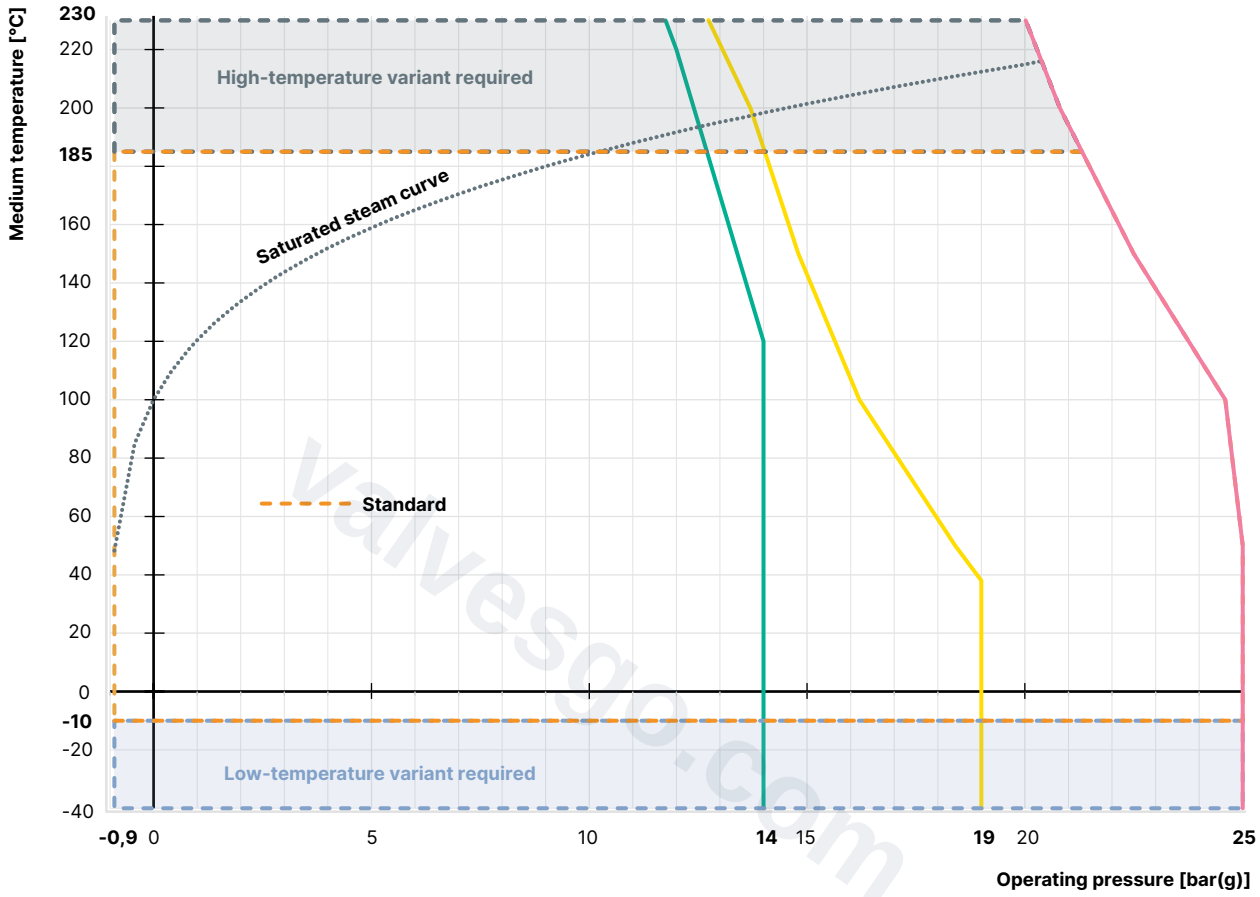

- Operating limits for PN25 according to DIN EN 12516-1
- Operating limits for flange 10K according to JIS B 2220
- Operating limits for Class 150 according to ASME B16.34
- Saturated steam curve for water

DTS 1000496321 EN Version: - Status: RL (released | freigegeben | valide) printed: 07.10.2026

valvesgo.com

Operating limits for ambient and medium temperature

ELEMENT on/off valve

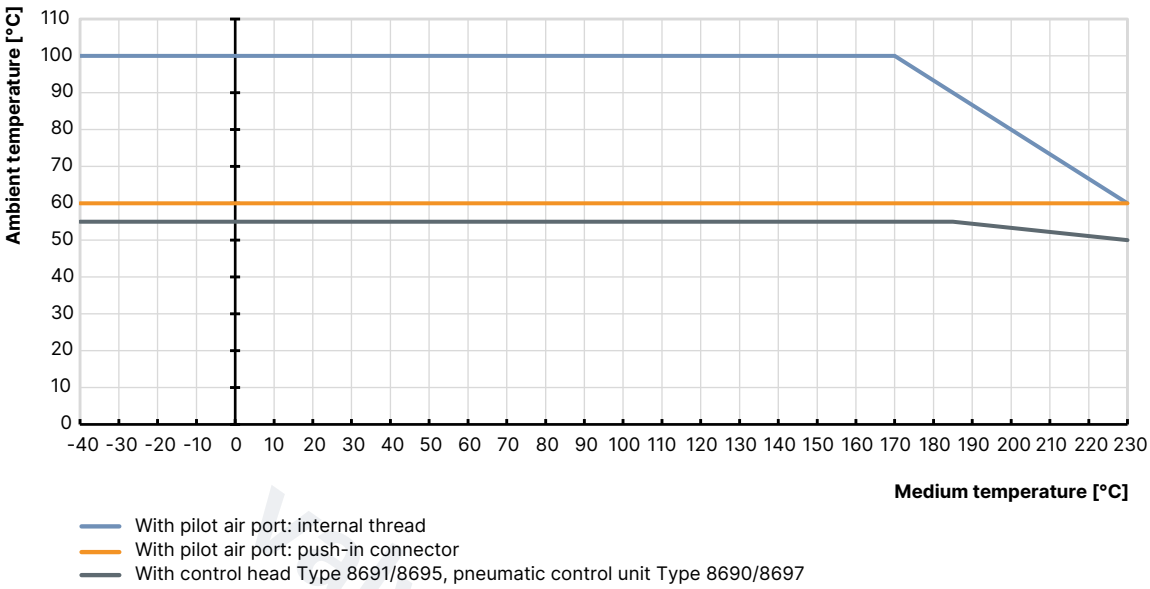

Operating limits for optional variants

High-temperature variant
Thanks to an adaption of the packing gland, this variant is suitable for applications with steam, neutral gases and other heat transfer mediums up to + 230 °C.

Water variant
For applications with water up to + 200 °C, a special configuration of the packing gland increases service life significantly. It is recommended for water temperatures starting at + 85 °C.

Drinking water variant
Wetted materials in contact with the medium are tested for suitability with drinking water up to + 85 °C.

Vacuum variant
Without relief bore, this design is suitable for pressures down to - 0.9 bar(g).

Low-temperature variant
Suitable for medium temperatures down to - 40 °C

Variant for oxygen
Non-metallic wetted materials are tested for suitability with oxygen and are suitable for operating pressures up to 25 bar(g) and medium temperatures up to+ 60 °C.

DTS 1000496321 EN Version: - Status: RL (released | freigegeben | valide) printed: 07.10.2026

valvesgo.com

7. Product accessories

Electrical position indicator

Control head

Type 8691 ▸ Actuator size Ø 70 mm

Type 8695 ▸ Actuator size Ø 50 mm

The control heads Type 8691 and Type 8695 are optimised for integrated mounting on process valves of the 21XX series. The valve position is detected without contact via an analogue sensor element. The sensor element automatically detects and stores the valve end positions during commissioning using the teach function. The integrated pilot valve controls single-acting or double-acting actuators. The valve switching status is indicated by coloured high-performance LEDs.

Features

- Status indication via coloured high-performance LEDs
- Wear-free inductive position sensor
- Pilot valve with manual override
- Teach function for automatic recognition of valve end positions
- Hygienic stainless steel design
- Easy-to-clean, chemically resistant housing according to IP65/67, 4X rating
- AS-Interface, IO-Link, Bürkert system bus (büS)

Customer benefits

- Simple and safe commissioning using the teach function
- Easy process monitoring and fault detection through visible coloured high-performance LEDs
- High degree of system availability through increased actuator service life by means of spring chamber ventilation
- Minimal space requirement in plant piping for more flexibility in plant design

Pneumatic control unit/position feedback

Type 8690 ▸ Actuator size Ø 70 mm

Type 8697 ▸ Actuator size Ø 50 mm

The pneumatic control units Type 8690 and 8697 are optimised for integrated mounting on process valves of the 21XX series. Mechanical or inductive limit switches detect the valve position. The integrated pilot valve controls single-acting or double-acting (Type 8690) actuators.

Features

- Optical position indicator
- Mechanical or inductive proximity switches for end position registering
- Pilot valve with manual override
- Compact design
- Easy-to-clean, chemically resistant housing according to IP65/67, 4X rating
- Optionally intrinsically safe design according to ATEX/IECEx

Customer benefits

- Simple and safe commissioning using the teach function (Type 8697)
- Minimal space requirement in plant piping for more flexibility in plant design

DTS 1000496321 EN Version: - Status: RL (released | freigegeben | valide) printed: 07.10.2026

valvesgo.com

8. Networking and combination with other Bürkert products

The **angle seat valve Type 2100** can be combined with the **position feedback Type 8690/8697** or the **control head Type 8691/8695** to **valve system on/off ELEMENT Type 8801-YE**.

Note:

- For the configuration of further valve systems use the **Product Enquiry Form** (see **"9.3. Bürkert Product Enquiry Form" on page 25**).
- You order two components and receive a completely assembled and tested valve.

Angle seat valve

Type 2100

Position feedback		Control head	
Type 8690 ▸	**Type 8697** ▸	**Type 8691** ▸	**Type 8695** ▸
Pneumatic control for decentralised automation of ELEMENT process valves		Control head for decentralised automation of ELEMENT process valves	

Valve system on/off ELEMENT

Type 8801-YE-K	**Type 8801-YE-U**	**Type 8801-YE-H**	**Type 8801-YE-M**
on/off ELEMENT valve system with decentralised automation			

DTS 1000496321 EN Version: - Status: RL (released | freigegeben | valide) printed: 07.10.2026

valvesgo.com

9. Ordering information

9.1. Bürkert eShop

Bürkert eShop – Easy ordering and quick delivery

You want to find your desired Bürkert product or spare part quickly and order directly? Our online shop is available for you 24/7. Sign up and enjoy all the benefits.

Order online now

9.2. Bürkert product filter

Bürkert product filter – Get quickly to the right product

You want to select products comfortably based on your technical requirements?
Use the Bürkert product filter and find suitable articles for your application quickly and easily.

Try out our product filter

9.3. Bürkert Product Enquiry Form

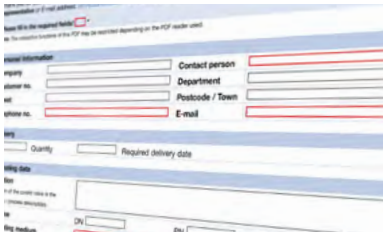

Bürkert Product Enquiry Form – Your enquiry quickly and compactly

Would you like to make a specific product enquiry based on your technical requirements? Use our Product Enquiry Form for this purpose. There you will find all the relevant information for your Bürkert contact. This will enable us to provide you with the best possible advice.

Fill out the form now

DTS 1000496321 EN Version: - Status: RL (released | freigegeben | valide) printed: 07.10.2026

valvesgo.com

9.4. Ordering chart variant with internal threaded

Valves with flow direction below seat

Control function	Nominal diameter (port connection)	Internal threaded connection	Actuator size Ø	Pilot pressure min.	Operating pressure max.	Article no.	Article no. ATEX II 2GD certified (mechanical)
	DN	[inch]	[mm]	[bar(g)]	[bar(g)]		
A (CF A) see control functions 1.)	15	G ½	50 (D)	5.2	25	213619	259510
		G ½	70 (M)	5.0	25	213620	259511
	20	G ¾	50 (D)	5.2	16	227616	259513
		G ¾	70 (M)	5.0	25	213621	259515
	25	G 1	50 (D)	5.2	9	227617	259516
		G 1	70 (M)	5.0	16	213622	259517
	32	G 1¼	70 (M)	5.0	8.5	213623	259519
		G 1¼	90 (N)	5.0	25	213624	259521
	40	G 1½	70 (M)	5.0	6	213625	259523
		G 1½	90 (N)	5.0	16	213627	259524
	50	G 2	90 (N)	5.0	10	175108	259525
		G 2	130 (P)	5.0	25 (20 3.))	188610	259526
	65	G 2½	90 (N)	5.0	5	239456	259527
		G 2½	130 (P)	5.6	16 (15 3.))	239472	259530
B (CF B) see control functions 1.)	15	G ½	50 (D)	See diagram 2.)	25	213637	259531
		G ½	70 (M)		25	213638	259532
	20	G ¾	50 (D)		25	213639	259533
		G ¾	70 (M)		25	213640	259535
	25	G 1	70 (M)		25	213641	259537
	32	G 1¼	70 (M)		25	213642	259538
	40	G 1½	70 (M)		25	213643	259539
	50	G 2	70 (M)		16	175123	259540
	65	G 2½	90 (N)		14	239464	259565
		G 2½	130 (P)		16 (15 3.))	239479	259566

1.) Further information can be found in chapter "2. Control functions" on page 5.

2.) See diagram in chapter "Pilot pressure diagrams for flow direction below seat (Control function B)" on page 18

3.) According to pressure equipment directive 2014/68/EU for compressible fluids of group 1 (dangerous gases and vapours according to article 4, paragraph (1), c), i), first indent)

DTS 1000496321 EN Version: - Status: RL (released | freigegeben | valide) printed: 07.10.2026

valvesgo.com

Control function	Nominal diameter (port connection)	Internal threaded connection	Actuator size Ø	Pilot pressure min.	Operating pressure max.	Article no.
	DN	[inch]	[mm]	[bar(g)]	[bar(g)]	
A (CF A) see control functions 1.)	15	NPT ½	50 (D)	5.2	25	213644
		NPT ½	70 (M)	5.0	25	213645
	20	NPT ¾	50 (D)	5.2	16	227618
		NPT ¾	70 (M)	5.0	25	213646
	25	NPT 1	50 (D)	5.2	9	227619
		NPT 1	70 (M)	5.0	16	213647
	32	NPT 1¼	70 (M)	5.0	8.5	213648
		NPT 1¼	90 (N)	5.0	25	213649
	40	NPT 1½	70 (M)	5.0	6	213650
		NPT 1½	90 (N)	5.0	16	213651
	50	NPT 2	90 (N)	5.0	10	188641
		NPT 2	130 (P)	5.0	25 (20 3.))	188642
	65	NPT 2½	90 (N)	5.0	5	239457
		NPT 2½	130 (P)	5.6	16 (15 3.))	239473
B (CF B) see control functions 1.)	15	NPT ½	50 (D)	See diagram 2.)	25	213661
		NPT ½	70 (M)		25	213662
	20	NPT ¾	50 (D)		25	213663
		NPT ¾	70 (M)		25	213664
	25	NPT 1	70 (M)		25	213665
	32	NPT 1¼	70 (M)		25	213666
	40	NPT 1½	70 (M)		25	213667
	50	NPT 2	70 (M)		16	188656
	65	NPT 2½	90 (N)		14	239465
		NPT 2½	130 (P)		16 (15 3.))	239480

1.) Further information can be found in chapter "2. Control functions" on page 5.
2.) See diagram in chapter "Pilot pressure diagrams for flow direction below seat (Control function B)" on page 18
3.) According to pressure equipment directive 2014/68/EU for compressible fluids of group 1 (dangerous gases and vapours according to article 4, paragraph (1), c), i), first indent)

DTS 1000496321 EN Version: - Status: RL (released | freigegeben | valide) printed: 07.10.2026

valvesgo.com

Control function	Nominal diameter (port connection)	Internal threaded connection	Actuator size Ø	Pilot pressure min.	Operating pressure max.	Article no.
	DN	[inch]	[mm]	[bar(g)]	[bar(g)]	
A (CF A) see control functions [1.)]	15	RC ½	50 (D)	5.2	25	213668
		RC ½	70 (M)	5.0	25	213669
	20	RC ¾	50 (D)	5.2	16	227621
		RC ¾	70 (M)	5.0	25	213670
	25	RC 1	50 (D)	5.2	9	227622
		RC 1	70 (M)	5.0	16	213671
	32	RC 1¼	70 (M)	5.0	8.5	213672
		RC 1¼	90 (N)	5.0	25	213673
	40	RC 1½	70 (M)	5.0	6	213674
		RC 1½	90 (N)	5.0	16	213675
	50	RC 2	90 (N)	5.0	10	188664
		RC 2	130 (P)	5.0	25 (20 [3.)])	188665
	65	RC 2½	90 (N)	5.0	5	239458
		RC 2½	130 (P)	5.6	16 (15 [3.)])	239474
B (CF B) see control functions [1.)]	15	RC ½	50 (D)	See diagram [2.)]	25	213685
		RC ½	70 (M)		25	213686
	20	RC ¾	50 (D)		25	213687
		RC ¾	70 (M)		25	213688
	25	RC 1	70 (M)		25	213689
	32	RC 1¼	70 (M)		25	213690
	40	RC 1½	70 (M)		25	213691
	50	RC 2	70 (M)		16	188679
	65	RC 2½	90 (N)		14	239466
		RC 2½	130 (P)		16 (15 [3.)])	239481

1.) Further information can be found in chapter "2. Control functions" on page 5.
2.) See diagram in chapter "Pilot pressure diagrams for flow direction below seat (Control function B)" on page 18
3.) According to pressure equipment directive 2014/68/EU for compressible fluids of group 1 (dangerous gases and vapours according to article 4, paragraph (1), c), i), first indent)

Further variants on request

	Approval Food contact, drinking water, oxygen, fuel gases, explosion protection		**Pressure** Other variants for operating pressures up to 25 bar(g) Vacuum variant down to - 0.9 bar(g)
	Material Seal: NBR, FKM, EPDM		**Temperature** High temperature variant up to + 230 °C Hot water variant up to + 200 °C Low temperature variant down to - 40 °C
	Process connection Clamp connection, welded connection		

DTS 1000496321 EN Version: - Status: RL (released | freigegeben | valide) printed: 07.10.2026

valvesgo.com

Valves with flow direction above seat

Control function	Nominal diameter (port connection)	Internal threaded connection	Actuator size Ø	Pilot pressure min.	Operating pressure max.	Article no.	Article no. ATEX II 2GD certified (mechanical)
	DN	[inch]	[mm]	[bar(g)]	[bar(g)]		
A (CF A) see control functions [1.)]	15	G ½	50 (D)	See diagram [2.)]	16	213628	259567
		G ½	70 (M)		16	213629	259568
	20	G ¾	50 (D)		16	213630	259569
		G ¾	70 (M)		16	213631	259571
	25	G 1	50 (D)		16	213632	259573
		G 1	70 (M)		16	213633	259575
	32	G 1¼	70 (M)		16	213634	259576
	40	G 1½	70 (M)		16	213635	259577
		G 1½	90 (N)		16	213636	259578
	50	G 2	70 (M)		12	175115	259579
		G 2	90 (N)		16	175116	259580

1.) Further information can be found in chapter "2. Control functions" on page 5.
2.) See diagram in chapter "Pilot pressure diagram for flow direction above seat (control function A)" on page 20

Control function	Nominal diameter (port connection)	Internal threaded connection	Actuator size Ø	Pilot pressure min.	Operating pressure max.	Article no.
	DN	[inch]	[mm]	[bar(g)]	[bar(g)]	
A (CF A) see control functions [1.)]	15	NPT ½	50 (D)	See diagram [2.)]	16	213652
		NPT ½	70 (M)		16	213653
	20	NPT ¾	50 (D)		16	213654
		NPT ¾	70 (M)		16	213655
	25	NPT 1	50 (D)		16	213656
		NPT 1	70 (M)		16	213657
	32	NPT 1¼	70 (M)		16	213658
	40	NPT 1½	70 (M)		16	213659
	50	NPT 2	70 (M)		12	188649

1.) Further information can be found in chapter "2. Control functions" on page 5.
2.) See diagram in chapter "Pilot pressure diagram for flow direction above seat (control function A)" on page 20

Control function	Nominal diameter (port connection)	Internal threaded connection	Actuator size Ø	Pilot pressure min.	Operating pressure max.	Article no.
	DN	[inch]	[mm]	[bar(g)]	[bar(g)]	
A (CF A) see control functions [1.)]	15	RC ½	50 (D)	See diagram [2.)]	16	213676
		RC ½	70 (M)		16	213677
	20	RC ¾	50 (D)		16	213678
		RC ¾	70 (M)		16	213679
	25	RC 1	50 (D)		16	213680
		RC 1	70 (M)		16	213681
	32	RC 1¼	70 (M)		16	213682
	40	RC 1½	70 (M)		16	213683
	50	RC 2	70 (M)		12	188672

1.) Further information can be found in chapter "2. Control functions" on page 5.
2.) See diagram in chapter "Pilot pressure diagram for flow direction above seat (control function A)" on page 20

DTS 1000496321 EN Version: - Status: RL (released | freigegeben | valide) printed: 07.10.2026

valvesgo.com

9.5. Ordering chart variant with welded

Valves with flow direction below seat

Control function	Nominal diameter (port connection)	Port connection pipe Ø	Actuator size Ø	Pilot pressure min.	Operating pressure max.	Article no.
	DN	[mm]	[mm]	[bar(g)]	[bar(g)]	
DIN EN ISO 1127 / ISO 4200						
A (CF A) see control functions [1.)]	15	21.3 × 1.6	50 (D)	5.2	25	187065
		21.3 × 1.6	70 (M)	5.0	25	188680
	20	26.9 × 1.6	50 (D)	5.2	16	210399
		26.9 × 1.6	70 (M)	5.0	25	188681
	25	33.7 × 2.0	50 (D)	5.2	9	235519
		33.7 × 2.0	70 (M)	5.0	16	188682
	32	42.4 × 2.0	70 (M)	5.0	8.5	188683
		42.4 × 2.0	90 (N)	5.0	25	188684
	40	48.3 × 2.0	70 (M)	5.0	6	188685
		48.3 × 2.0	90 (N)	5.0	16	188686
	50	60.3 × 2.0	90 (N)	5.0	10	283500
		60.3 × 2.0	130 (P)	5.0	25 (20 [3.)])	283501
	65	76.1 × 2.3	90 (N)	5.0	5	239459
		76.1 × 2.3	130 (P)	5.6	16 (15 [3.)])	239475
B (CF B) see control functions [1.)]	15	21.3 × 1.6	50 (D)	See diagram [2.)]	25	187069
		21.3 × 1.6	70 (M)		25	188697
	20	26.9 × 1.6	50 (D)		25	187070
		26.9 × 1.6	70 (M)		25	188698
	25	33.7 × 2.0	70 (M)		25	188699
	32	42.4 × 2.0	70 (M)		25	188700
	40	48.3 × 2.0	70 (M)		25	188701
	50	60.3 × 2.0	70 (M)		16	283504
	65	76.1 × 2.3	90 (N)		14	239467
		76.1 × 2.3	130 (P)		16 (15 [3.)])	239482
DIN 11850 series 2 / DIN EN 10357 series A						
A (CF A) see control functions [1.)]	15	13.0 × 1.5	50 (D)	5.2	25	187071
		13.0 × 1.5	70 (M)	5.0	25	188703
	20	23.0 × 1.5	50 (D)	5.2	16	227605
		23.0 × 1.5	70 (M)	5.0	25	188704
	25	29.0 × 1.5	50 (D)	5.2	9	221922
		29.0 × 1.5	70 (M)	5.0	16	188705
	32	35.0 × 1.5	70 (M)	5.0	8.5	188706
		35.0 × 1.5	90 (N)	5.0	25	188707
	40	41.0 × 1.5	70 (M)	5.0	6	188708
		41.0 × 1.5	90 (N)	5.0	16	188709
	50	53.0 × 1.5	90 (N)	5.0	10	188710
		53.0 × 1.5	130 (P)	5.0	25 (20 [3.)])	188711
	65	70.0 × 2.0	90 (N)	5.0	5	239460
		70.0 × 2.0	130 (P)	5.6	16 (15 [3.)])	237020
B (CF B) see control functions [1.)]	15	13.0 × 1.5	50 (D)	See diagram [2.)]	25	187075
		13.0 × 1.5	70 (M)		25	188720
	20	23.0 × 1.5	50 (D)		25	187076
		23.0 × 1.5	70 (M)		25	188721
	25	29.0 × 1.5	70 (M)		25	188722
	32	35.0 × 1.5	70 (M)		25	188723
	40	41.0 × 1.5	70 (M)		25	188724
	50	53.0 × 1.5	70 (M)		16	188725
	65	70.0 × 2.0	90 (N)		14	239468
		70.0 × 2.0	130 (P)		16 (15 [3.)])	239483

DTS 1000496321 EN Version: - Status: RL (released | freigegeben | valide) printed: 07.10.2026

valvesgo.com

Control function	Nominal diameter (port connection)	Port connection pipe Ø	Actuator size Ø	Pilot pressure min.	Operating pressure max.	Article no.
	DN	[mm]	[mm]	[bar(g)]	[bar(g)]	
ASME BPE						
A (CF A) see control functions [1.)]	15	12.7 × 1.65	50 (D)	5.2	25	187077
		12.7 × 1.65	70 (M)	5.0	25	188726
	20	19.05 × 1.65	50 (D)	5.2	16	227607
		19.05 × 1.65	70 (M)	5.0	25	188727
	25	25.4 × 1.65	50 (D)	5.2	9	227608
		25.4 × 1.65	70 (M)	5.0	16	188728
	40	38.1 × 1.65	70 (M)	5.0	6	188729
		38.1 × 1.65	90 (N)	5.0	16	188730
	50	50.8 × 1.65	90 (N)	5.0	10	188731
		50.8 × 1.65	130 (P)	5.0	25 (20 [3.)])	188732
	65	63.5 × 1.65	90 (N)	5.0	5	239461
		63.5 × 1.65	130 (P)	5.6	16 (15 [3.)])	239478
B (CF B) see control functions [1.)]	15	12.7 × 1.65	50 (D)	See diagram [2.)]	25	187082
		12.7 × 1.65	70 (M)		25	188740
	20	19.05 × 1.65	50 (D)		25	187083
		19.05 × 1.65	70 (M)		25	188741
	25	25.4 × 1.65	70 (M)		25	188742
	40	38.1 × 1.65	70 (M)		25	188781
	50	50.8 × 1.65	70 (M)		16	188744
	65	63.5 × 1.65	90 (N)		14	239469
		63.5 × 1.65	130 (P)		16 (15 [3.)])	239484
SMS 3008						
A (CF A) see control functions [1.)]	15	12 × 1.0	50 (D)	5.2	25	187084
		12 × 1.0	70 (M)	5.0	25	188745
	20	18 × 1.0	50 (D)	5.2	16	227609
		18 × 1.0	70 (M)	5.0	25	188746
	25	25 × 1.2	50 (D)	5.2	9	227610
		25 × 1.2	70 (M)	5.0	16	188747
	40	38 × 1.2	70 (M)	5.0	6	188748
		38 × 1.2	90 (N)	5.0	16	188749
	50	51 × 1.2	90 (N)	5.0	10	188750
		51 × 1.2	130 (P)	5.0	25 (20 [3.)])	188751
	65	63.5 × 1.65	90 (N)	5.0	5	239462
		63.5 × 1.65	130 (P)	5.6	16 (15 [3.)])	239477
B (CF B) see control functions [1.)]	15	12 × 1.0	50 (D)	See diagram [2.)]	25	187089
		12 × 1.0	70 (M)		25	188759
	20	18 × 1.0	50 (D)		25	187090
		18 × 1.0	70 (M)		25	188760
	25	25 × 1.2	70 (M)		25	188761
	40	38 × 1.2	70 (M)		25	188762
	50	51 × 1.2	70 (M)		16	188763
	65	63.5 × 1.65	90 (N)		14	239470
		63.5 × 1.65	130 (P)		16 (15 [3.)])	239485

1.) Further information can be found in chapter "2. Control functions" on page 5.
2.) See diagram in chapter "Pilot pressure diagrams for flow direction below seat (Control function B)" on page 18
3.) According to pressure equipment directive 2014/68/EU for compressible fluids of group 1 (dangerous gases and vapours according to article 4, paragraph (1), c), i), first indent)

DTS 1000496321 EN Version: - Status: RL (released | freigegeben | valide) printed: 07.10.2026

valvesgo.com

Valves with flow direction above seat

Control function	Nominal diameter (port connection)	Port connection pipe Ø	Actuator size Ø	Pilot pressure min.	Operating pressure max.	Article no.
	DN	[mm]	[mm]	[bar(g)]	[bar(g)]	
DIN EN ISO 1127 / ISO 4200						
A (CF A) see control functions [1.)]	15	21.3 × 1.6	50 (D)	See diagram [2.)]	16	187066
	20	26.9 × 1.6	50 (D)		16	187067
	25	33.7 × 2	50 (D)		16	187068
	32	42.4 × 2	70 (M)		16	188692
	40	48.3 × 2	70 (M)		16	188693
	50	60.3 × 2.0	70 (M)		12	274663
DIN 11850 series 2 / DIN EN 10357 series A						
A (CF A) see control functions [1.)]	15	19 × 1.5	50 (D)	See diagram [2.)]	16	187072
	20	23 × 1.5	50 (D)		16	187073
	25	29 × 1.5	50 (D)		16	187074
	32	35 × 1.5	70 (M)		16	188715
	40	41 × 1.5	70 (M)		16	188716
	50	53 × 1.5	70 (M)		12	188718
ASME BPE						
A (CF A) see control functions [1.)]	15	12.7 × 1.65	50 (D)	See diagram [2.)]	16	187078
	20	19.05 × 1.65	50 (D)		16	187079
	25	25.4 × 1.65	50 (D)		16	187080
	40	38.1 × 1.65	70 (M)		16	188736
	50	50.8 × 1.65	70 (M)		12	188738
SMS 3008						
A (CF A) see control functions [1.)]	15	12 × 1.0	50 (D)	See diagram [2.)]	16	187085
	20	18 × 1.0	50 (D)		16	187086
	25	25 × 1.2	50 (D)		16	187087
	40	38 × 1.2	70 (M)		16	188755
	50	51 × 1.2	70 (M)		12	188757

1.) Further information can be found in chapter "2. Control functions" on page 5.
2.) See diagram in chapter "Pilot pressure diagram for flow direction above seat (control function A)" on page 20

DTS 1000496321 EN Version: - Status: RL (released | freigegeben | valide) printed: 07.10.2026

valvesgo.com

9.6. Ordering chart variant with clamp connection

Valves with flow direction below seat

Control function	Nominal diameter (port connection)	Port connection external clamp Ø	Actuator size Ø	Pilot pressure min.	Operating pressure max.	Article no.
	DN	[mm]	[mm]	[bar(g)]	[bar(g)]	
DIN 32676 series B (pipe: ISO 4200)						
A (CF A) see control functions [1.)]	15	34.0	50 (D)	5.2	25	187097
		34.0	70 (M)	5.0	25	188783
	20	50.5	50 (D)	5.2	16	209437
		50.5	70 (M)	5.0	25	188784
	25	50.0	50 (D)	5.2	9	227613
		50.5	70 (M)	5.0	16	188785
	32	50.5	70 (M)	5.0	8.5	188786
		50.5	90 (N)	5.0	25	188787
	40	64.0	70 (M)	5.0	6	188788
		64.0	90 (N)	5.0	16	188789
	50	77.5	90 (N)	5.0	10	188790
		77.5	130 (P)	5.0	25 (20 [3.)])	188791
B (CF B) see control functions [1.)]	15	34.0	50 (D)	See diagram [2.)]	25	187101
		34.0	70 (M)		25	188800
	20	50.5	50 (D)		25	187102
		50.5	70 (M)		25	188801
	25	50.5	70 (M)		25	188802
	32	50.5	70 (M)		25	188803
	40	64.0	70 (M)		25	188804
	50	77.5	70 (M)		16	188805
ASME BPE						
A (CF A) see control functions [1.)]	15	25.0	50 (D)	5.2	25	187103
		25.0	70 (M)	5.0	25	188806
	20	25.5	50 (D)	5.2	16	227614
		25.5	70 (M)	5.0	25	188807
	25	50.5	50 (D)	5.2	9	227615
		50.5	70 (M)	5.0	16	188808
	40	50.5	70 (M)	5.0	6	188809
		50.5	90 (N)	5.0	16	188810
	50	64.0	90 (N)	5.0	10	188811
		64.0	130 (P)	5.0	25 (20 [3.)])	188812
B (CF B) see control functions [1.)]	15	25.0	50 (D)	See diagram [2.)]	25	187107
		25.0	70 (M)		25	188820
	20	25.0	50 (D)		25	187108
		50.5	70 (M)		25	188821
	25	50.5	70 (M)		25	188822
	40	50.5	70 (M)		25	188823
	50	64.0	70 (M)		16	188824

1.) Further information can be found in chapter "2. Control functions" on page 5.
2.) See diagram in chapter "Pilot pressure diagrams for flow direction below seat (Control function B)" on page 18

DTS 1000496321 EN Version: - Status: RL (released | freigegeben | valide) printed: 07.10.2026

valvesgo.com

Further variants on request			
	Approval Food contact, drinking water, oxygen, fuel gases, explosion protection		**Pressure** Other variants for operating pressures up to 25 bar(g) Vacuum variant down to - 0.9 bar(g)
	Material Seal: NBR, FKM, EPDM		**Temperature** High temperature variant up to + 230 °C Hot water variant up to + 200 °C Low temperature variant down to - 40 °C
	Process connection Clamp connection, welded connection		

Valves with flow direction above seat

Control function	Nominal diameter	Port connection external clamp Ø	Actuator size Ø	Pilot pressure min.	Operating pressure	Article no.
	DN	[mm]	[mm]	[bar(g)]	[bar(g)]	
DIN 32676 series B (pipe: ISO 4200)						
A (CF A) see control functions [1.)]	15	34.0	50 (D)	See diagram [2.)]	16	187098
	20	50.5	50 (D)		16	187099
	25	50.5	50 (D)		16	187100
	32	50.5	70 (M)		16	188795
	40	64.0	70 (M)		16	188796
	50	77.5	70 (M)		12	188798
ASME BPE						
A (CF A) see control functions [1.)]	15	25.0	50 (D)	See diagram [2.)]	16	187104
	20	25.0	50 (D)		16	187105
	25	50.5	50 (D)		16	187106
	40	50.5	70 (M)		16	188816
	50	64.0	70 (M)		12	188818

1.) Further information can be found in chapter "2. Control functions" on page 5.
2.) See diagram in chapter "Pilot pressure diagram for flow direction above seat (control function A)" on page 20

DTS 1000496321 EN Version: - Status: RL (released | freigegeben | valide) printed: 07.10.2026

valvesgo.com

valvesgo.com