Type 8653
Field module for pneumatic systems

Address
Bürkert Fluid Control Systems
Christian-Bürkert-Str. 13-17
D-74653 Ingelfingen
Tel. +49 (0)7940 10-91 111
E-mail: info@burkert.com
International: country.burkert.com

Manuals on the Internet: country.burkert.com

Important information for devices with UL approval

1 Intended use

The AirLINE Field Type 8653 field module is designed to control and record the switching statuses of pneumatically actuated process valves, pneumatic cylinders and other pneumatically actuated actuators directly in the process environment.

- Use the device for its intended purpose only. Non-intended use of the device may be dangerous to people, nearby equipment and the environment.
- Do not use the device in the potentially explosive atmosphere.
- Correct transportation, correct storage as well as correct assembly, installation, start-up, operation and maintenance are essential for reliable and problem-free operation.
- When using the device, observe the permitted data, operating conditions and application conditions. This information can be found in the contractual documents, the operating instructions and on the type label.
- Use the device only in conjunction with third-party devices and components recommended and authorized by Bürkert.
- Make sure the device is in a technically flawless state before use.

The device is intended only for use in industrial areas.

The device is not suitable for use in applications where there is a risk to life and limb.

2 Basic safety instructions

These safety instructions do not consider any contingencies or incidents which occur during assembly, operation and maintenance. The operator is responsible for observing the location-specific safety regulations, also with reference to the personnel.

Risk of injury due to high pressure and uncontrolled movement of the actuators.

- Before working on the device or system, secure the actuators against moving.
- Before working on the device or system, switch off the pressure. Vent or drain lines.

Risk of injury due to improper installation and maintenance.

- Only trained technicians may perform installation and maintenance work.
- Perform installation and maintenance with suitable tools only.

Risk of injury due to sharp edges.

- The earthing plate on the bracket has sharp edges that can cause cuts.
- Wear suitable protective gloves.

Ensure degree of protection.

- If the device is mounted with the connections facing upwards: make sure that the exhaust ports are closed by a suitable silencer or that the exhaust air is discharged via a hose.

The AirLINE Field Type 8653 field module is supplied as a fully assembled device. If defects are discovered, the device must be replaced.

MAN 1000676742 EN Version: - Status: RL (released | freigegeben) printed: 21.09.2026

© Bürkert Werke GmbH & Co. KG, 2024

valvesgo.com

3 Operating conditions

Altitude	Restricted to max. 2000 m above sea level for UL approved versions
Ambient temperature	–10...+55 °C
Storage temperature	–10...+60 °C
Compressed air quality	ISO 8573-1:2010, Class 7.4.4

4 Electrical data

- Use protective low voltage according to protection class III EN 61140, VDE 0140.

Nominal operating mode	Continuous operation (100% duty cycle)
Operating voltage	24 V ⎓ ± 10%, residual ripple at fieldbus interface 1 Vss[1)]
Current consumption	≤ 400 mA

[1)] UL approved Versions must be supplied by one of the following:
a) Limited Energy Circuit (LEC) according to UL/ IEC 61010-1
b) Limited Power Source (LPS) according to UL/ IEC 60950
c) SELV/ PELV with UL Recognized Overcurrent Protection dimensioned according to UL/ IEC 61010-1 Table 18
d) NEC Class 2 power source

5 Assembly

The housing with IP65/67 protection eliminates the need for further protective housing such as a control cabinet.

WARNING

Malfunctioning caused by electrostatic discharge.

Electrostatic discharge at the device may cause malfunctioning.

- **Assembly on wall:** Depending on the installation situation, use a short cable with a large cross-section to connect the device to the functional earth.
- **Assembly on standard rail:** Depending on the installation situation, use a short cable with a large cross-section to connect the standard rail to the functional earth.

Danger due to electromagnetic fields.

If the functional earth (FE) is not connected, the conditions of the EMC Law are not observed.

- **Assembly on wall:** Depending on the installation situation, use a short cable with a large cross-section to connect the device to the functional earth.
- **Assembly on standard rail:** Depending on the installation situation, use a short cable with a large cross-section to connect the standard rail to the functional earth.

5.1 Assembly on wall using the bracket

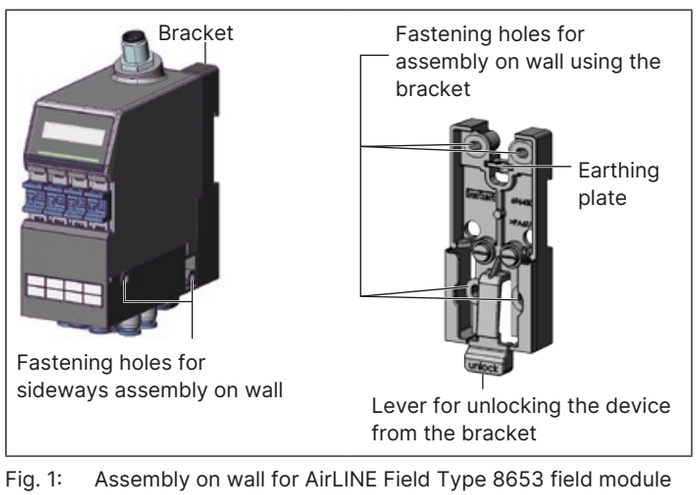

Fig. 1: Assembly on wall for AirLINE Field Type 8653 field module

Preparatory work

The bracket is connected to the device in the scope of delivery. For assembly on wall using the bracket, the device must be released from the bracket.

- Push back the lever for unlocking the device and at the same time pull the device upwards out of the bracket.

Assembly

- Securely attach the bracket using 4 suitable screws (e. g. M5 screws) to a suitable substrate (max. tightening torque 1.5 Nm for M5 screws).
- Slide the guide bars on the field module from the top to the bottom into the guide slot of the bracket until the locking mechanism engages audibly.

5.2 Assembly on wall using the lateral fastening holes

- Securely attach the field module using 2 suitable screws (e. g. M5 screws) to a suitable substrate (max. tightening torque 1.5 Nm for M5 screws).

5.3 Assembly on standard rail

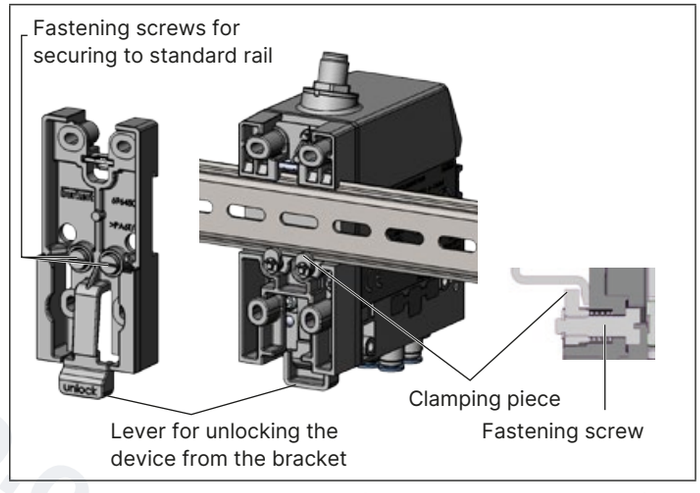

Fig. 2: Assembly on standard rail for AirLINE Field Type 8653 field module

Preparatory work

The bracket is connected to the device in the scope of delivery. For assembly on the standard rail, the device must be released from the bracket.

- Push back the lever for unlocking the device and at the same time pull the device upwards out of the bracket.

Assembly

- Using a slotted-head screwdriver, carefully turn the fastening screws on the bracket all the way anticlockwise.
- Position the bracket on the standard rail by tilting it upward slightly and then push it into position on the standard rail.
- Using a slotted-head screwdriver, carefully turn the fastening screws on the bracket all the way clockwise.

The bracket is now secured to the standard rail by the clamping pieces.

- Slide the guide bars on the field module from the top to the bottom into the guide slot of the bracket until the locking mechanism engages audibly.

Removal from the standard rail

- Push back the lever for unlocking the device and at the same time pull the device upwards out of the bracket.
- Using a slotted-head screwdriver, carefully turn the fastening screws on the bracket all the way anticlockwise.
- Tilt the bracket upward slightly and remove it from the standard rail.

MAN 1000676742 EN Version: - Status: RL (released | freigegeben) printed: 21.09.2026

valvesgo.com