bürkert
FLUID CONTROL SYSTEMS

Pneumatically operated 2/2-way globe valve ELEMENT for decentralised automation

- Compact design
- Long service life
- Easy integration of automation units with ELEMENT
- Stainless steel valve body with flange, sleeve or welded connection
- Suitable for steam

Product variants described in the data sheet may differ from the product presentation and description.

Can be combined with

Type 8690
Pneumatic control unit for decentralised automation of process valves ELEMENT

Type 8691
Control head for decentralised automation of ELEMENT process valves

Type 8695
Control head for decentralised automation of ELEMENT process valves

Type 8697
Pneumatic control unit for decentralised automation of process valves ELEMENT

Type 8801
On/off valve systems ELEMENT with decentralised automation – overview

Type 8840
Modular process valve cluster – distributor and collector

Type description

The Type 2101 globe valve is specially optimised for decentralised process automation and meets all practical requirements even under difficult operating conditions. Its unique design allows easy the integration of automation units in all expansion stages, from electrical/optical position feedback to pneumatic control and integrated fieldbus interface. Maximum service life and tightness are achieved by the proven self-adjusting v-seal packing gland. The highly integrated system of valve and automation unit is characterised by its compact and smooth design, integrated pilot air ducts, protection classes IP65/67, NEMA Type 4X and high resistance to chemicals.

DTS 1000112108 EN Version: AH Status: RL (released | freigegeben | valide) printed: 28.07.2026

© Christian Bürkert GmbH & Co. KG, Subject to alteration

Visit product website

valvesgo.com

Table of contents

1. General technical data 3

2. Control functions 4

3. Approvals and conformities 5

3.1. General notes 5
3.2. Conformity 5
3.3. Standards 5
3.4. Explosion protection 5
3.5. Drinking water 5
3.6. Foods and beverages/Hygiene 6
3.7. Others 6
DNV GL classification 6
Oxygen 6
Fuel gases 6
Hydrogen 6
TA Luft 6

4. Materials 7

4.1. Bürkert resistApp 7
4.2. Material specifications 7
Stainless steel for higher drive forces 8

5. Dimensions 9

5.1. Actuator 9
Valve system on/off ELEMENT 10
5.2. Body with flange connection 12
5.3. Body with threaded connection 13
5.4. Body with welded connection 14
5.5. Body with clamp connection 15

6. Performance specifications 16

6.1. Fluidic data 16
Overview of fluidic data for flow below seat (for liquids, steam and gases) 16
Pilot pressure diagrams with flow direction below seat (Control function B) 17
Overview of fluidic data with flow above seat (for gases and steam) 18
Pilot pressure diagram for flow direction above seat (control function A) 19
6.2. Operating limits 20
Operating limits for medium temperature and operating pressure 20
Operating limits for ambient and medium temperature 21
Operating limits for optional variants 21

7. Product accessories 22

8. Networking and combination with other Bürkert products 23

9. Ordering information 24

9.1. Bürkert eShop 24
9.2. Bürkert product filter 24
9.3. Bürkert Product Enquiry Form 24
9.4. Ordering chart for flange connection 25
Valves with flow direction below seat 25
Valves with flow direction above seat 27

DTS 1000112108 EN Version: AH Status: RL (released | freigegeben | valide) printed: 28.07.2026

valvesgo.com

valvesgo.com

1. General technical data

Product properties	
Dimensions	Further information can be found in chapter "5. Dimensions" on page 9.
Material	Further information can be found in chapter "4. Materials" on page 7.
Design	Globe valve
Nominal diameter (port connection)	DN 10...DN 100, NPS ⅜...NPS 4
Safety setting in case of power failure	Normally closed (control function A), normally open (control function B)
Flow direction	Against closing direction (below seat), with closing direction (above seat)
Performance data	
Operating pressure	0 bar(g)...25 bar(g), 40 bar(g) on reques (see "6.1. Fluidic data" on page 16) Vacuum variants...- 0.9 bar(g) (option)
Nominal pressure	PN 25/PN 40 (DIN EN 1333), Class 150 (DIN EN 1759)
Pilot pressure	2.5 bar(g)...10 bar(g) (see "6.1. Fluidic data" on page 16)
Seat leakage	Leakage rate A (DIN EN 12266 - 1), seat seal PTFE and PEEK, test medium air
K_V value	4.7 m³/h...140 m³/h (see "6.1. Fluidic data" on page 16)
Medium data	
Operating medium	Steam, water, neutral gases, alcohols, oils, fuels, hydraulic fluids, salt solutions, organic solvents, oxygen and fuel gases of families I, II and III in accordance with the Gas Appliances Regulation (EU) 2016/426, Hydrogen (optional), lyes (optional)
Medium temperature	- 40 °C...+ 230 °C (see "6.2. Operating limits" on page 20)
Viscosity	Max. 600 mm²/s
Control medium	Air, neutral gases
Product connections	
Port connection [1.)]	
Flange connection	DIN EN 1092 - 1 ANSI B 16.5 JIS 10K
Threaded connection	G (DIN ISO 228 - 1) NPT (ASME B1.20.1) RC (ISO 7 - 1)
Welded connection	DIN EN ISO 1127 / ISO 4200 / DIN 11866 series B DIN 11850 - 2 / DIN 11866 series A ASME BPE / DIN 11866 series C SMS 3008
Pilot air port	Push-in connector (external Ø 6 mm or ¼") or thread G ⅛" (on request)
Approvals and conformities	
Further information can be found in chapter "3. Approvals and conformities" on page 5.	
Material certificate	2.2, 3.1
Environment and installation	
Environmental factors	Protect the device from electromagnetic interference, UV radiation and, when used outdoors, from weather conditions.
Ambient temperature	- 10 °C...+ 100 °C (see "6.2. Operating limits" on page 20)
Degree of protection	IP65/67
Installation position	As required, preferably with actuator in upright position

1.) Others are available on request.

DTS 1000112108 EN Version: AH Status: RL (released | freigegeben | valide) printed: 28.07.2026

valvesgo.com

valvesgo.com

2. Control functions

⚠ WARNING

Risk of damage due to bursting pipes and bursting equipment when the flow is above the seat.
In the case of liquid mediums, water hammer can occur causing pipes and the device to burst.

Do not use valves with flow above the seat for liquid mediums.

Symbol	Description	
Flow direction below seat for fluids, steam and gases		
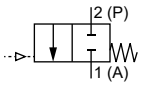	**Control function A (CF A)** Pneumatically operated 2/2-way on/off valve Flow direction below seat Normally closed by spring force	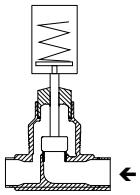
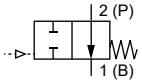	**Control function B (CF B)** Pneumatically operated 2/2-way on/off valve Flow direction below seat Normally opened by spring force	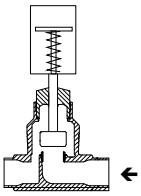
Flow direction above seat for steam and gases		
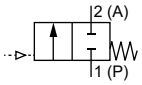	**Control function A (CF A)** Pneumatically operated 2/2-way on/off valve Flow direction above seat Normally closed by spring force	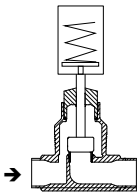

DTS 1000112108 EN Version: AH Status: RL (released | freigegeben | valide) printed: 28.07.2026

valvesgo.com

valvesgo.com

3. Approvals and conformities

3.1. General notes

- The approvals and conformities listed below must be stated when making enquiries. This is the only way to ensure that the product complies with all required specifications.
- Not all available variants can be supplied with the below mentioned approvals or conformities.

3.2. Conformity

In accordance with the Declaration of Conformity, the product is compliant with the EU Directives. This includes the following directives:

- Pressure Equipment Directive 2014/68/EU
- Machinery Directive 2006/42/EC

3.3. Standards

The applied standards which are used to demonstrate compliance with the EU Directives are listed in the EU-Type Examination Certificate and/or the EU Declaration of Conformity.

3.4. Explosion protection

<table>
<tr><th>Approval</th><th>Description</th></tr>
<tr><td></td><td>
Optional: Explosion protection (valid for the variable code PX51)
As a category 2 device suitable for zone 1/21 and zone 2/22.

ATEX:
EPS 18 ATEX 2 008 X
II 2G Ex h IIC T4...T2 Gb
II 2D Ex h IIIC T135 °C...T300 °C Db

IECEx:
IECEx EPS 18.0007X
Ex h IIC T4...T2 Gb
Ex h IIIC T135 °C...T300 °C Db
<table>
<tr><td>Temperature class</td><td>T2</td><td>T3</td><td>T4</td></tr>
<tr><td>Maximum surface temperature</td><td>+ 300 °C</td><td>+ 200 °C</td><td>+ 135 °C</td></tr>
<tr><td>Ambient temperature</td><td>- 40 °C...+ 130 °C</td><td>- 40 °C...+ 130 °C</td><td>- 40 °C...+ 100 °C</td></tr>
<tr><td>Maximum medium temperature</td><td>+ 285 °C</td><td>+ 185 °C</td><td>+ 125 °C</td></tr>
</table>
Note: The ambient and medium temperature range may be limited by non-ex-relevant specifications. Observe the Operating Instructions.
</td></tr>
</table>

3.5. Drinking water

Conformity	Description
H_2O	**Suitable for use in drinking water applications** The materials comply with the assessment principles (UBA) for materials in contact with drinking water (TrinkwasserV). **Stainless steel body** PF39: Suitable for products with medium temperature up to 85 °C (hot water)

DTS 1000112108 EN Version: AH Status: RL (released | freigegeben | valide) printed: 28.07.2026

valvesgo.com

3.6. Foods and beverages/Hygiene

Conformity	Description
FDA	**FDA – Code of Federal Regulations (valid for the variable code PL02, PL03)** All wetted materials are compliant with the Code of Federal Regulations published by the FDA (Food and Drug Administration, USA) according to the manufacturer's declaration.
USP	**United States Pharmacopeial Convention (USP) (valid for the variable code PL04)** All wetted materials are biocompatible according to the manufacturer's declaration.
	EC Regulation 1935/2004 of the European Parliament and of the Council (valid for the variable code PL01, PL02) All wetted materials are compliant with EC Regulation 1935/2004/EC according to the manufacturer's declaration.
	China food GB Standards of the People's Republic of China (valid for the variable code PL10) All wetted materials are compliant with the requirement of China food GB Standards according to the manufacturer's declaration.

3.7. Others

DNV GL classification

Approval	Description
TYPE APPROVED PRODUCT DNV DNV.COM/AF	**DNV GL classification – Ships, offshore units, and high speed and light craft** The products are accepted for installation on all vessels classed by DNV GL.

Oxygen

Conformity	Description
O_2	**Optional: Suitability for oxygen (valid for the variable code NL02)** The products are suitable for use with gaseous oxygen, according to the manufacturer's declaration.

Fuel gases

Conformity	Description
CE	**Fuel gases (valid for the variable code PO19, PO20)** The products comply with: • Regulation (EU) 2016/426 – Appliances burning gaseous fuels and • DVGW DIN EN 161 (Automatic shut-off valves for gas burners and gas appliances) and • DIN EN 16678, Class A or Class D (Safety and control devices for gas burners and gas burning appliances – Automatic shut-off valves for operating pressure of above 500 kPa up to and including 6 300 kPa)

Hydrogen

Conformity	Description
H_2	**Optional: Suitability for hydrogen (valid for the variable code NG18)** The products are suitable for use with gaseous hydrogen, according to the manufacturer's declaration.

TA Luft

Conformity	Description
TA Luft	**Technical instruction on air quality control (valid for the variable code PM01)**

DTS 1000112108 EN Version: AH Status: RL (released | freigegeben | valide) printed: 28.07.2026

valvesgo.com

4. Materials

4.1. Bürkert resistApp

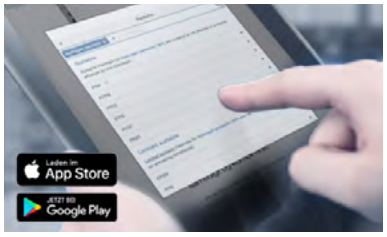

Bürkert resistApp – Chemical resistance chart

You want to ensure the reliability and durability of the materials in your individual application case? Verify your combination of media and materials on our website or in our resistApp.

Start chemical resistance check

4.2. Material specifications

Note:
The lubricants for packing gland and actuator are classified according to NSF H1.

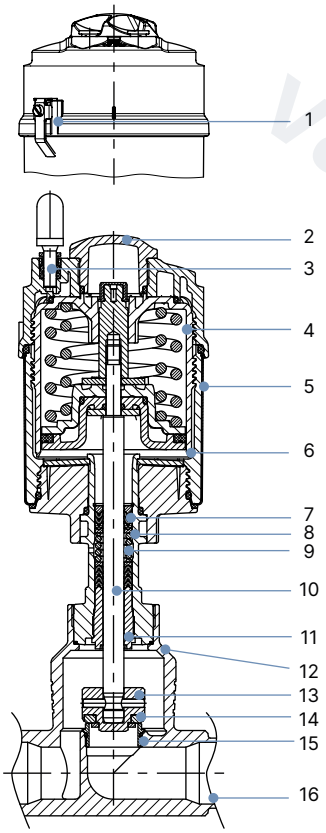

No.	Element	Material
1	Ground terminal	Stainless steel 1.4301/1.4305 only for ATEX variant
2	Optical position indicator	Optical position indicator polysulfone PSU
3	Pilot air ports	Push-in connector PP (standard) Thread G ⅛" stainless steel 1.4305 (on request)
4	Actuator cover	PPS
5	Actuator casing	Stainless steel 1.4561 (316Ti)
6	Piston seal	FKM
7	Spring	Stainless steel 1.4310
8	Pipe	Stainless steel 1.4401 (316)/1.4404 (316L)
9	Spindle packing	PTFE V-Rings (filled), with spring compensation
10	Spindle	Stainless steel 1.4401 (316)/1.4404 (316L)
11	Spindle guide	DN 15...DN 65: PEEK DN 80...DN 100: 1.4401 (316)/1.4404 (316L)
12	Body seal	Graphite, PTFE (option)
13	Swivel plate	Stainless steel 1.4401 (316)/1.4404 (316L)
14	Seat seal	PTFE, PEEK (option)
15	Valve seat with O-ring	Stainless steel 1.4571, EPDM
16	Valve body	Stainless steel 316L / CF3M

DTS 1000112108 EN Version: AH Status: RL (released | freigegeben | valide) printed: 28.07.2026

valvesgo.com

Stainless steel for higher drive forces

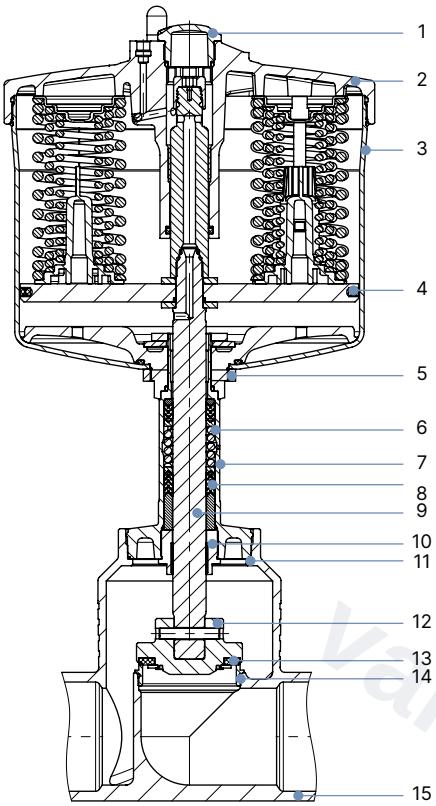

No.	Element	Material
1	Transparent cover	Ultrason S
2	Drive cover	Stainless steel 1.4308
3	Liner	Stainless steel 1.4404
4	Piston seal	FKM
5	Nut	Stainless steel 1.4301
6	Spring	Stainless steel 1.4310
7	Tube	Stainless steel CF3M
8	Packing gland	PTFE V-rings (filled), with spring compensation
9	Stem	Stainless steel 1.4021
10	Stem guide	Stainless steel 1.4404 (316L) / PTFE filled
11	Housing seal	Graphite or PTFE
12	Swing disc	Stainless steel 1.4401 (316)/ 1.4404 (316L)
13	Seat seal	PTFE or PEEK (option)
14	Valve seat with O-ring	Stainless steel 1.4571, EPDM
15	Valve body	Stainless steel 316L/CF3M

DTS 1000112108 EN Version: AH Status: RL (released | freigegeben | valide) printed: 28.07.2026

valvesgo.com

valvesgo.com

5. Dimensions

5.1. Actuator

Note:
Dimensions in mm, unless otherwise stated

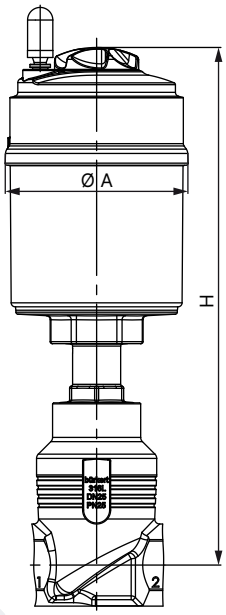

Nominal diameter (port connection)		Actuator size Ø	Ø A	H
DN	NPS	[mm]		
10	⅜	50 (D)	64.5	236
		70 (M)	91	250
15	½	50 (D)	64.5	236
		70 (M)	91	250
20	¾	50 (D)	64.5	242
		70 (M)	91	256
		90 (N)	120	318
25	1	50 (D)	64.5	245
		70 (M)	91	259
		90 (N)	120	311
32	1¼	90 (N)	120	340
		130 (P)	159	392
40	1½	90 (N)	120	345
		130 (P)	159	397
50	2	90 (N)	120	351
		130 (P)	159	403
65	2½	130 (P)	159	432
		225 (L)	245	471
80	3	130 (P)	159	465
		225 (L)	245	478
100	4	130 (P)	159	475
		225 (L)	245	488

DTS 1000112108 EN Version: AH Status: RL (released | freigegeben | valide) printed: 28.07.2026

valvesgo.com

Valve system on/off ELEMENT

Note:

- Further information can be found in chapter "7. Product accessories" on page 22.
- Dimensions in mm, unless otherwise stated

Control head

Type 8691	Type 8695
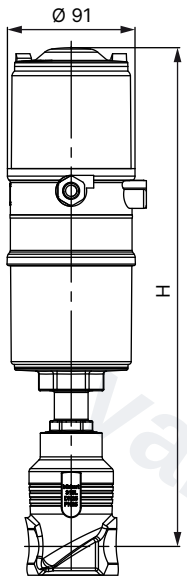	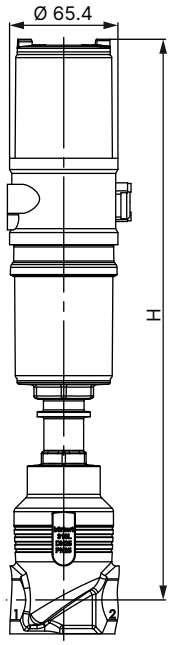

Nominal diameter (port connection)		Actuator size Ø	Type 8691 or Type 8695	Type 8690 or Type 8697
DN	NPS	[mm]		
10	⅜	50 (D)	330	–
		70 (M)	347	–
15	½	50 (D)	330	–
		70 (M)	347	–
20	¾	50 (D)	336	–
		70 (M)	353	–
		90 (N)	414	–
25	1	50 (D)	339	–
		70 (M)	356	–
		90 (N)	437	–
32	1¼	90 (N)	437	–
		130 (P)	489	–
40	1½	90 (N)	442	–
		130 (P)	494	–
50	2	90 (N)	448	–
		130 (P)	500	–
65	2½	130 (P)	529	–
		225 (L)	603	316
80	3	130 (P)	562	–
		225 (L)	611	322
100	4	130 (P)	572	–
		225 (L)	621	326

DTS 1000112108 EN Version: AH Status: RL (released | freigegeben | valide) printed: 28.07.2026

valvesgo.com

Pneumatic control units/position feedback

Type 8690	Type 8697
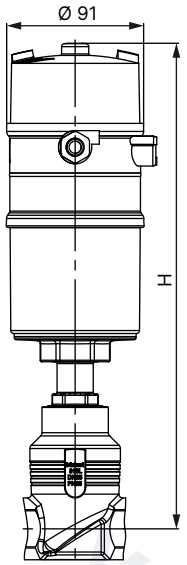	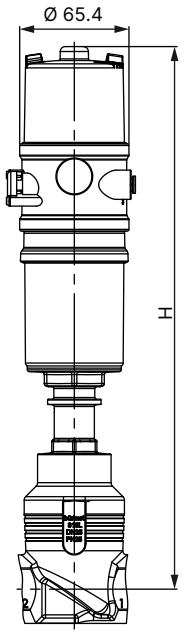

Nominal diameter (port connection)		Actuator size Ø	Type 8690 or Type 8697
DN	NPS	[mm]	
10	⅜	50 (D)	316
		70 (M)	314
15	½	50 (D)	316
		70 (M)	314
20	¾	50 (D)	322
		70 (M)	320
		90 (N)	384
25	1	50 (D)	325
		70 (M)	323
		90 (N)	404
32	1¼	90 (N)	404
		130 (P)	456
40	1½	90 (N)	409
		130 (P)	461
50	2	90 (N)	415
		130 (P)	467
65	2½	130 (P)	496
80	3	130 (P)	529
100	4	130 (P)	539

DTS 1000112108 EN Version: AH Status: RL (released | freigegeben | valide) printed: 28.07.2026

valvesgo.com

5.2. Body with flange connection

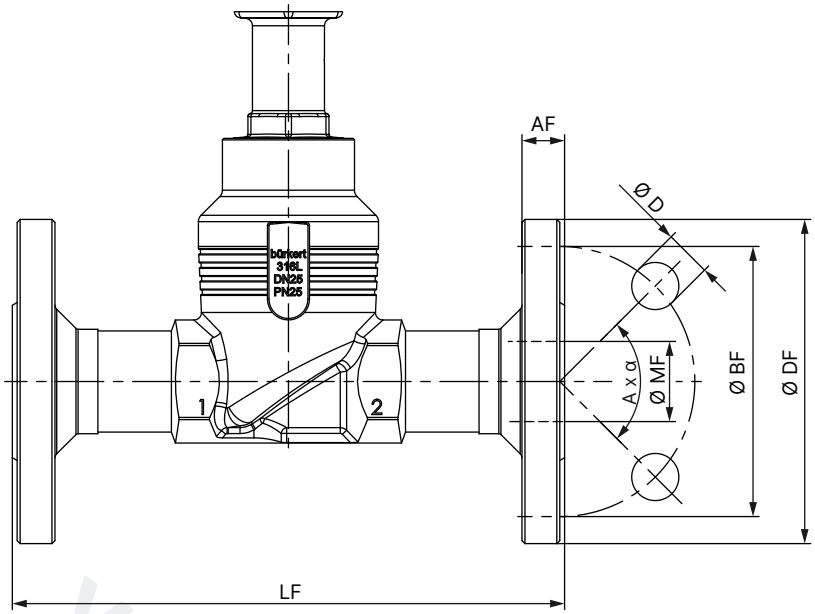

Nominal diameter (port connection)	DIN EN 1092 PN 25 FTF 1 according to DIN EN 558 - 1							JIS 10K FTF 10 according to DIN EN 558 - 2						
DN	Ø DF	LF	Ø BF	AF	Ø D	A x α	Ø MF	Ø DF	LF	Ø BF	AF	Ø D	A x α	Ø MF
10	90	130	60	16	14	4 × 90°	13.6	–	–	–	–	–	–	–
15	95	130	65	16	14	4 × 90°	18.1	95	108	70	12	15	4 × 90°	18.1
20	105	150	75	18	14	4 × 90°	23.7	100	117	75	14	15	4 × 90°	23.7
25	115	160	85	18	14	4 × 90°	29.7	125	127	90	14	19	4 × 90°	29.7
32	140	180	100	18	18	4 × 90°	38.4	135	140	100	16	19	4 × 90°	38.4
40	150	200	110	18	18	4 × 90°	44.3	140	165	105	16	19	4 × 90°	44.3
50	165	230	125	20	18	4 × 90°	56.3	155	203	120	16	19	4 × 90°	56.3
65	185	290	145	22	18	8 × 45°	66.0	175	216	140	18	19	4 × 90°	71.5
80	200	310	160	24	18	8 × 45°	81.0	185	241	150	18	19	8 × 45°	84.3
100	235	350	190	24	22	8 × 45°	100.0	210	292	175	18	19	8 × 45°	109.1

Nominal diameter (port connection)	ANSI B 16.5 Class 150 FTF 37 according to DIN EN 558 - 2						
NPS	Ø DF	LF	Ø BF	AF	Ø D	A x α	Ø MF
½	89	184	60.5	11.2	15.7	4 × 90°	15.7
¾	99	184	69.9	12.7	15.7	4 × 90°	20.8
1	108	184	79.2	14.2	15.7	4 × 90°	26.7
1½	127	222	98.6	17.5	15.7	4 × 90°	40.9
2	152	254	120.7	19.1	19.1	4 × 90°	52.6
2½	178	276	139.7	22.3	19.1	4 × 90°	62.7
3	190	298	152.5	23.9	19.1	4 × 90°	78.0
4	229	352	190.5	23.9	19.1	8 × 45°	102.4

DTS 1000112108 EN Version: AH Status: RL (released | freigegeben | valide) printed: 28.07.2026

valvesgo.com

5.3. Body with threaded connection

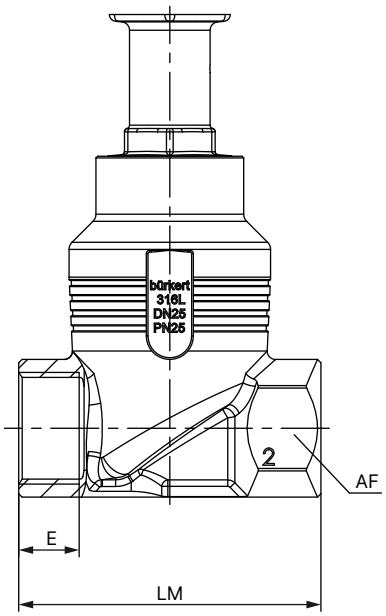

Nominal diameter (port connection)		G (DIN ISO 228 - 1) NPT (ASME B1.20.1) RC (ISO 7 - 1)				
		E			LM	AF
DN	NPS	G	NPT	RC		
10	⅜	12	10.3	10.1	65	27
15	½	14	13.7	13.2	65	27
20	¾	16	14	14.5	75	34
25	1	18	16.8	16.8	90	41
32	1¼	20	17.3	19.1	110	50
40	1½	22	17.3	19.1	120	55
50	2	24	17.6	23.4	150	70
65	2½	26	23.7	26.7	185	85
80	3	28	30.5	29.8	205	100
100	4	32	33	35.8	240	125

DTS 1000112108 EN Version: AH Status: RL (released | freigegeben | valide) printed: 28.07.2026

valvesgo.com

5.4. Body with welded connection

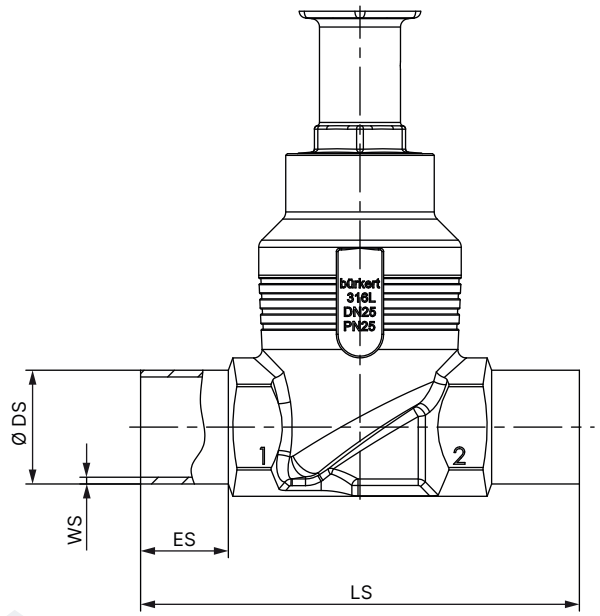

Nominal diameter (port connection)	ES	LS	DIN EN ISO 1127 / ISO 4200 / DIN 11866 series B		DIN 11850 - 2 / DIN 11866 series A / DIN EN 10357 series A	
DN			Ø DS	WS	Ø DS	WS
10	20	90	17.2	1.6	13	1.5
15	20	90	21.3	1.6	19	1.5
20	20	100	26.9	1.6	23	1.5
25	26	130	33.7	2.0	29	1.5
32	26	140	42.4	2.0	35	1.5
40	26	150	48.3	2.0	41	1.5
50	26	175	60.3	2.0	53	1.5
65	26	210	76.1	2.3	70	2.0
80	26	230	88.9	2.3	85	2.0
100	26	260	114.3	2.6	104	2.0

Nominal diameter (port connection)	ES	LS	ASME BPE / DIN 11866 series C	
NPS			Ø DS	WS
½	20	90	12.7	1.65
¾	20	90	19.05	1.65
1	20	100	25.4	1.65
1½	26	140	38.1	1.65
2	26	150	50.8	1.65
2½	26	175	63.5	1.65
3	26	210	76.2	1.65
4	26	260	101.6	2.11

DTS 1000112108 EN Version: AH Status: RL (released | freigegeben | valide) printed: 28.07.2026

valvesgo.com

5.5. Body with clamp connection

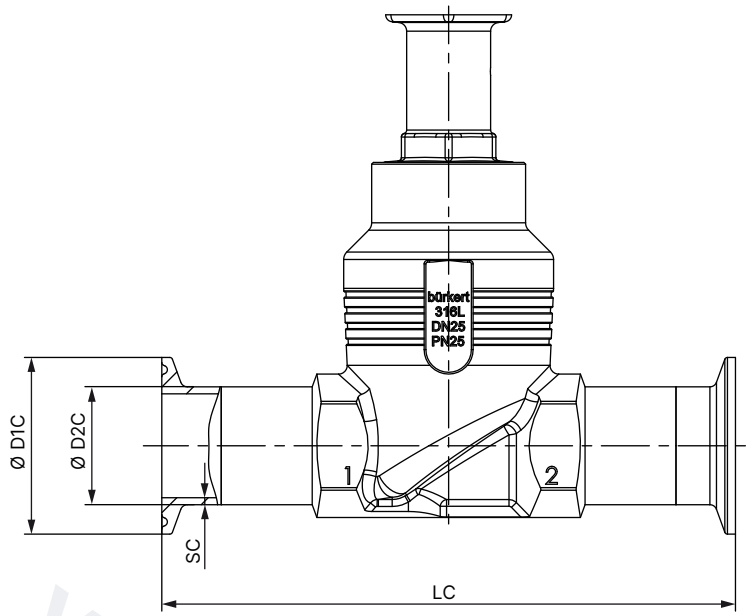

Nominal diameter (port connection)	Clamp: DIN 32676 series A Pipe: DIN 11850 - 2 / DIN 11866 series A / DIN EN 10357 series A				Clamp: DIN 32676 series B Pipe: DIN EN ISO 1127 / ISO 4200 / DIN 11866 series B			
DN	LC	Ø D2 C	Ø D1 C	SC	LC	Ø D2 C	Ø D1 C	SC
15	126	19	34	1.5	146	21.3	50.5	1.6
20	136	23	34	1.5	136	26.9	50.5	1.6
25	173	29	50.5	1.5	164	33.7	50.5	2.0
40	193	41	50.5	1.5	193	48.3	64.0	2.0
50	218	53	64	1.5	218	60.3	77.5	2.0

Nominal diameter (port connection)	Clamp: ASME BPE / DIN 11866 series C Pipe: ASME BPE / DIN 11866 series C			
NPS	LC	Ø D2 C	Ø D1 C	SC
½	122	12.7	25.0	1.65
¾	126	19.05	25.0	1.65
1	126	25.4	50.5	1.65
1½	172	38.1	50.5	1.65
2	182	50.8	64.0	1.65
2½	231	63.5	77.5	1.65
3	265	76.2	91.0	1.65
4	315	101.6	119.0	2.11

DTS 1000112108 EN Version: AH Status: RL (released | freigegeben | valide) printed: 28.07.2026

valvesgo.com

6. Performance specifications

6.1. Fluidic data

Overview of fluidic data for flow below seat (for liquids, steam and gases)

Note:

- K_V value [m³/h]: Measured with water at + 20 °C, 1 bar(g) pressure at valve inlet and free outlet
- Pressure data [bar(g)]: Overpressure to atmospheric pressure

Nominal diameter (port connection)		Actuator size Ø	K_V value water	Pilot pressure min.	Operating pressure max. [bar(g)]		
				CF A	CF A		CF B
					Seat seal		
					PTFE	PEEK	PTFE
DN	NPS	[mm]	[m³/h]	[bar(g)]	[bar(g)]	[bar(g)]	[bar(g)]
10	⅜	50 (D)	4.7	5.2	25	25	25
		70 (M)	4.7	4.8	25 40 3.)	25	25 40 3.)
15	½	50 (D)	4.7	5.2	25	25	25
		70 (M)	4.7	4.8	25 40 3.)	25	25 40 3.)
20	¾	50 (D)	8.1	5.2	16	13.5	25
		70 (M)	8.1	4.8	25	25	25 40 3.)
		90 (N)	8.1	5	40 3.)	–	–
25	1	70 (M)	13	4.8	16	13.5	25 40 3.)
		90 (N)	13	5	25 40 3.)	25	25 40 3.)
32	1¼	70 (M)	20	4.8	8.5	–	25
		90 (N)	20	5	25	19.5	25
		130 (P)	20	5	25	25	–
40	1½	70 (M)	31	4.8	6	–	25
		90 (N)	31	5	16	13.5	25
		130 (P)	31	5	25	25	25
50	2	90 (N)	45	5	10	–	25
		130 (P)	45	5	25 (20 1.))	23 (20 1.))	25 (20 1.))
65	2½	90 (N)	73	5	5	–	14
		130 (P)	73	5.6	16 (15 1.))	12.5	16 (15 1.))
		225 (L) 2.)	73	3	20 (15 1.))	18 (15 1.))	–
		225 (L)	73	3.9	25 (15 1.))	22 (15 1.))	25 (15 1.))
80	3	130 (P)	110	5.6	10	8	11
		225 (L) 2.)	110	3.8	18 (12.5 1.))	15 (12.5 1.))	–
		225 (L)	110	5.6	25 (12.5 1.))	22 (12.5 1.))	25 (12.5 1.))
100	4	130 (P)	165	5.6	6	5	7
		225 (L) 2.)	165	3.8	12	10	–
		225 (L)	165	5.6	16 (10 1.))	14 (10 1.))	16 (10 1.))

1.) According to pressure equipment directive 2014/68/EU for compressible fluids of group 1 (dangerous gases and vapours according to article 4, paragraph (1), c), i), first indent)
2.) Reduced compression spring force
3.) Only for housing variants with nominal pressure PN 40 (optional)

DTS 1000112108 EN Version: AH Status: RL (released | freigegeben | valide) printed: 28.07.2026

valvesgo.com

valvesgo.com

Pilot pressure diagrams with flow direction below seat (Control function B)

Actuator size Ø 50 mm
Maximum control pressure 10 bar(g)

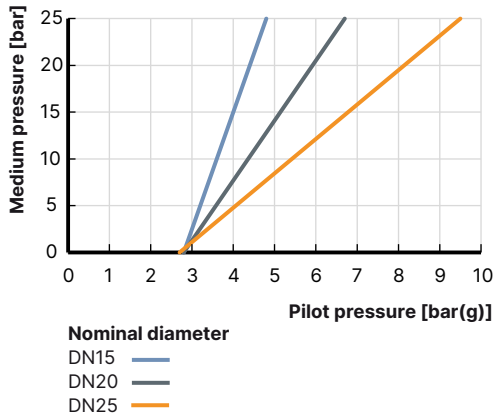

Actuator size Ø 70 mm
Maximum control pressure 10 bar(g)

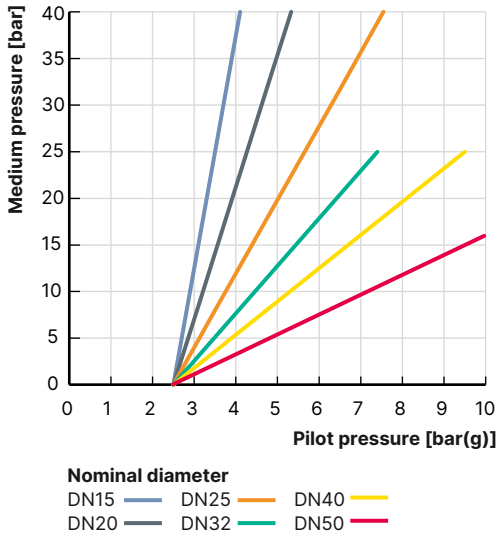

Actuator size Ø 90 mm
Maximum control pressure 10 bar(g)

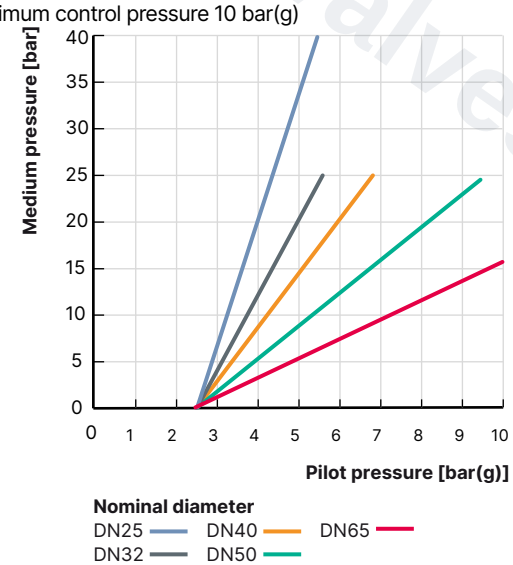

Actuator size Ø 130 mm
Maximum control pressure 7 bar(g)

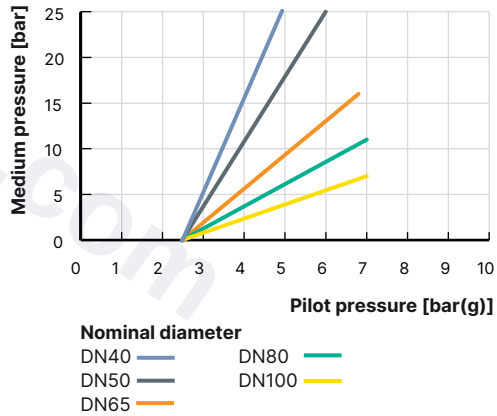

Actuator size Ø 225 mm
Maximum control pressure 5 bar(g)

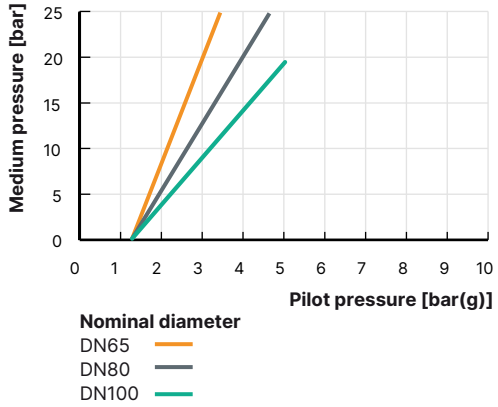

DTS 1000112108 EN Version: AH Status: RL (released | freigegeben | valide) printed: 28.07.2026

valvesgo.com

Overview of fluidic data with flow above seat (for gases and steam)

Note:

- K_V value [m³/h]: Measured with water at + 20 °C, 1 bar(g) pressure at valve inlet and free outlet
- Pressure data [bar(g)]: Overpressure to atmospheric pressure

⚠ WARNING

Risk of damage due to bursting pipes and bursting equipment when the flow is above the seat.
In the case of liquid mediums, water hammer can occur, causing pipes and the device to burst.

Do not use valves with flow above the seat for liquid mediums.

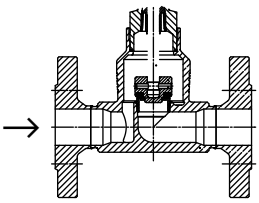

Nominal diameter (port connection)		Actuator size Ø	K_V value water	Operating pressure max. CF A
DN	NPS	[mm]	[m³/h]	[bar(g)]
15	½	50 (D)	4.7	16
		70 (M)	4.7	16
20	¾	50 (D)	8.1	16
		70 (M)	8.1	16
25	1	50 (D)	13	16
		70 (M)	13	16
32	1¼	70 (M)	19.5	16
40	1½	70 (M)	31	16
		90 (N)	31	16
50	2	70 (M)	45	12
		90 (N)	45	16

valvesgo.com

DTS 1000112108 EN Version: AH Status: RL (released | freigegeben | valide) printed: 28.07.2026

valvesgo.com

Pilot pressure diagram for flow direction above seat (control function A)

Actuator size Ø 50 mm
Maximum control pressure 10 bar(g)

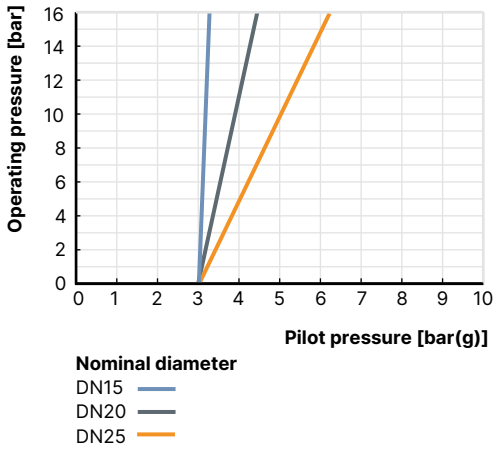

Actuator size Ø 70 mm
Maximum control pressure 10 bar(g)

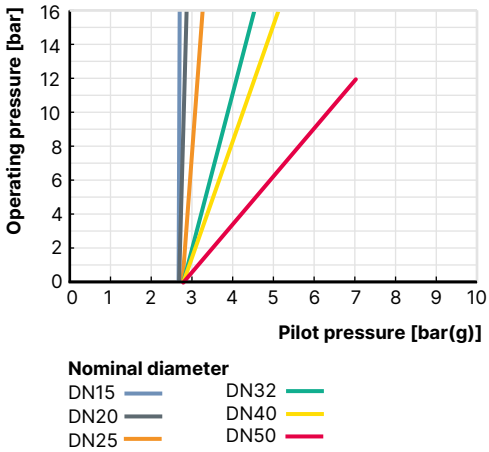

Actuator size Ø 90 mm
Maximum control pressure 10 bar(g)

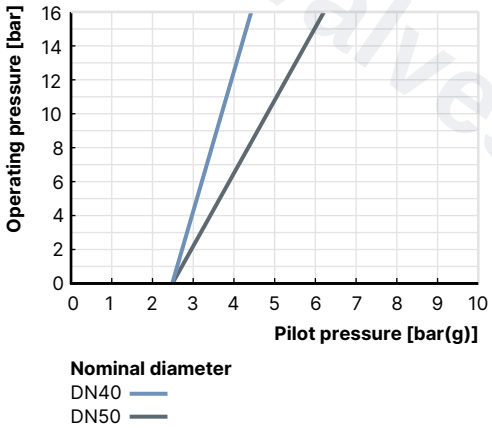

valvesgo.com

DTS 1000112108 EN Version: AH Status: RL (released | freigegeben | valide) printed: 28.07.2026

valvesgo.com

6.2. Operating limits

Operating limits for medium temperature and operating pressure

In addition to the maximum operating pressures, the operating range of Bürkert process valves is limited by the nominal pressure according to the relevant standard.

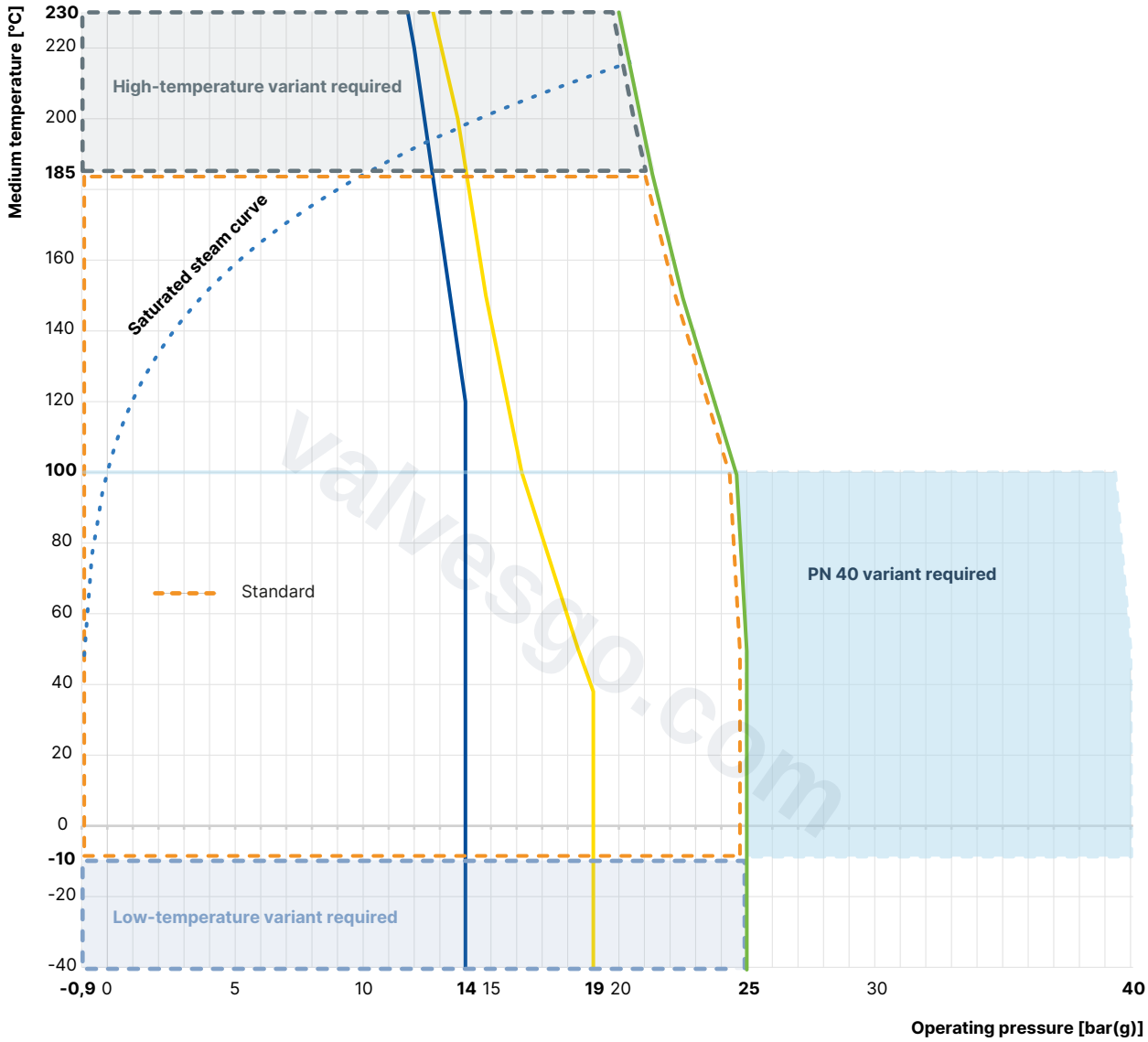

- Operating limits for PN25 according to DIN EN 12516 - 1
- Operating limits for PN40 according to DIN EN 12516 - 1
- Operating limits for flange 10K according to JIS B 2220
- Operating limits for Class 150 according to ASME B16.34
- Saturated steam curve for water

DTS 1000112108 EN Version: AH Status: RL (released | freigegeben | valide) printed: 28.07.2026

valvesgo.com

Operating limits for ambient and medium temperature

ELEMENT on/off valve

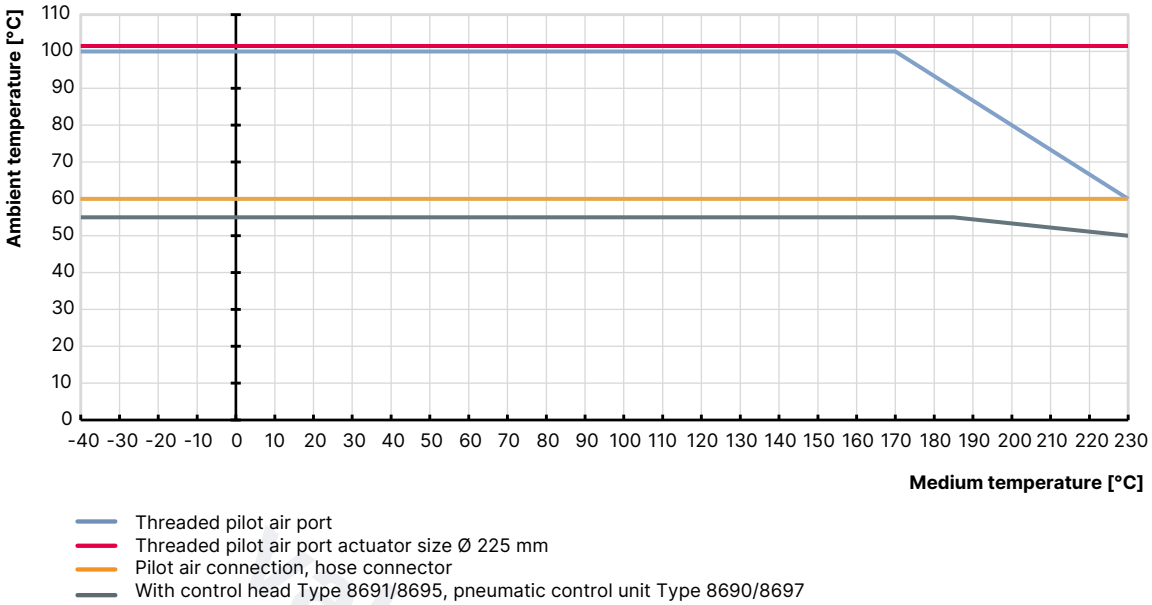

Operating limits for optional variants

High-temperature variant
Thanks to an adaption of the packing gland, this variant is suitable for applications with steam, neutral gases and other heat transfer mediums up to + 230 °C.

Water variant
For applications with water up to + 200 °C, a special configuration of the packing gland increases service life significantly. It is recommended for water temperatures starting at + 85 °C.

Drinking water variant
Wetted materials are tested in contact with the medium are tested for suitability with drinking water up to + 85 °C.

Vacuum variant
Without leakage bore, this design is suitable for pressures down to - 0.9 bar(g).

Low-temperature variant
Suitable for minimum medium temperatures down to - 40 °C

Oxygen variant
Non-metallic wetted materials are tested for suitability with oxygen and are suitable for operating pressures up to 25 bar(g) and medium temperatures up to + 60 °C. Optional variant for operating pressures up to 40 bar(g) and medium temperatures up to + 100 °C on request.

Hydrogen variant
Wetted materials are tested for suitability with hydrogen and are suitable for operating pressures up to 40 bar(g) and medium temperatures up to + 100 °C.

The hydrogen variant of Type 2101 is tested for an external tightness (stem seal and body seal) totalling 10^{-6} mbar*l/s at 40 bar, + 20 °C helium and 2.78×10^{-3} mbar*l/s at 40 bar, - 10 °C/+ 100 °C hydrogen. An external leak-tightness of 10^{-4} mbar*l/s is ensured when delivered.

DTS 1000112108 EN Version: AH Status: RL (released | freigegeben | valide) printed: 28.07.2026

valvesgo.com

7. Product accessories

Electrical position indicator

Control head

Type 8691 ▸ Actuator size Ø 70 mm

Type 8695 ▸ Actuator size Ø 50 mm

The control heads Type 8691 and Type 8695 are optimised for integrated mounting on process valves of the 21XX series. The valve position is detected without contact via an analogue sensor element. The sensor element automatically detects and stores the valve end positions during commissioning using the teach function. The integrated pilot valve controls single-acting or double-acting actuators. The valve switching status is indicated by coloured high-performance LEDs.

Features

- Status indication via coloured high-performance LEDs
- Wear-free inductive position sensor
- Pilot valve with manual override
- Teach function for automatic recognition of valve end positions
- Hygienic stainless steel design
- Easy-to-clean, chemically resistant housing according to IP65/67, 4X rating
- AS-Interface, IO-Link, Bürkert system bus (büS)

Customer benefits

- Simple and safe commissioning using the teach function
- Easy process monitoring and fault detection through visible coloured high-performance LEDs
- High degree of system availability due to increased actuator service life by means of spring chamber ventilation
- Minimal space requirement in plant piping for more flexibility in plant design

Pneumatic control unit/position feedback

Type 8690 ▸ Actuator size Ø 70 mm

Type 8697 ▸ Actuator size Ø 50 mm

The pneumatic control units Type 8690 and 8697 are optimised for integrated mounting on process valves of the 21XX series. Mechanical or inductive limit switches detect the valve position. The integrated pilot valve controls single-acting or double-acting (Type 8690) actuators.

Features

- Optical position indicator
- Mechanical or inductive proximity switches for end position detection
- Pilot valve with manual override
- Compact design
- Easy-to-clean, chemically resistant housing according to IP65/67, 4X rating
- Optionally intrinsically safe design according to ATEX/IECEx

Customer benefits

- Simple and safe commissioning using the teach function (Type 8697)
- Signal reliability due to the automatic adjustment of the limit switches
- Minimal space requirement in plant piping for more flexibility in plant design

DTS 1000112108 EN Version: AH Status: RL (released | freigegeben | valide) printed: 28.07.2026

valvesgo.com

8. Networking and combination with other Bürkert products

The **globe valve Type 2101** can be combined with the **position feedback Type 8690/8697** and the **control head Type 8691/8695** to form the **valve system on/off ELEMENT Type 8801-GC**.

Note:

- For the configuration of further valve systems use the **Product Enquiry Form** (see **"9.3. Bürkert Product Enquiry Form" on page 24**).
- You order two components and receive a completely assembled and tested valve.

Globe valve

Type 2101 (Example for flange connection)

Position feedback		Control head	
Type 8690 ▸	**Type 8697** ▸	**Type 8691** ▸	**Type 8695** ▸
Pneumatic control for decentralised automation of ELEMENT process valves		Control head for decentralised automation of ELEMENT process valves	

Valve system on/off ELEMENT

Type 8801-GC-K ▸	**Type 8801-GC-U** ▸	**Type 8801-GC-H** ▸	**Type 8801-GC-M** ▸
on/off ELEMENT valve system with decentralised automation			

DTS 1000112108 EN Version: AH Status: RL (released | freigegeben | valide) printed: 28.07.2026

valvesgo.com

valvesgo.com

9. Ordering information

9.1. Bürkert eShop

Bürkert eShop – Easy ordering and quick delivery

You want to find your desired Bürkert product or spare part quickly and order directly? Our online shop is available for you 24/7. Sign up and enjoy all the benefits.

Order online now

9.2. Bürkert product filter

Bürkert product filter – Get quickly to the right product

You want to select products comfortably based on your technical requirements?
Use the Bürkert product filter and find suitable articles for your application quickly and easily.

Try out our product filter

9.3. Bürkert Product Enquiry Form

Note:
Please see our Product Enquiry Form for a full explanation of our specification key.

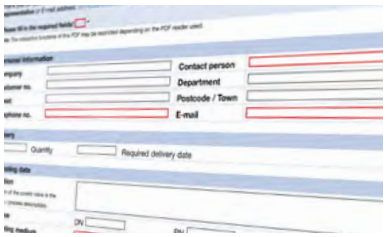

Bürkert Product Enquiry Form – Your enquiry quickly and compactly

Would you like to make a specific product enquiry based on your technical requirements? Use our Product Enquiry Form for this purpose. There you will find all the relevant information for your Bürkert contact. This will enable us to provide you with the best possible advice.

Fill out the form now

DTS 1000112108 EN Version: AH Status: RL (released | freigegeben | valide) printed: 28.07.2026

valvesgo.com

9.4. Ordering chart for flange connection

Valves with flow direction below seat

Control function	Nominal diameter (port connection)	Actuator size Ø	Pilot pressure min.	Operating pressure [3.] max. +185 °C	Article no.	Article no. certified ATEX II 2GD (mechanical)
	DN	[mm]	[bar(g)]	[bar(g)]		
DIN EN 1092-1						
A (CF A) see control functions [1.]	15	50 (D)	5.2	25	203076	260092
	20	50 (D)	5.2	16	203077	260093
		70 (M)	4.8	25	203078	260094
	25	50 (D)	5.2	9	203079	260095
		70 (M)	4.8	16	189700	260096
	32	70 (M)	4.8	8.5	203080	260099
		90 (N)	5.0	25	203081	260100
	40	70 (M)	4.8	6	203082	260101
		90 (N)	5.0	16	203083	260103
	50	90 (N)	5.0	10	203084	260104
		130 (P)	5.0	25 (20 [2.])	218418	260106
	65	90 (N)	5.0	5	239524	260107
		130 (P)	5.6	16 (15 [2.])	219533	260109
		225 (L)	3.9	25 (15) [2.]	20060527	20060548
	80	130 (P)	5.6	10	239528	260110
		225 (L)	5.6	25 (12.5) [2.]	20060528	20060549
	100	130 (P)	5.6	6	239531	260144
		225 (L)	5.6	16 (10) [2.]	20060529	20060551

1.) Further information can be found in chapter "2. Control functions" on page 4.
2.) According to pressure equipment directive 2014/68/EU for compressible fluids of group 1 (dangerous gases and vapours according to article 4, paragraph (1), c), i), first indent)
3.) Observe operating limits, see "6.2. Operating limits" on page 20

DTS 1000112108 EN Version: AH Status: RL (released | freigegeben | valide) printed: 28.07.2026

valvesgo.com

valvesgo.com

Control function	Nominal diameter (port connection)	Actuator size Ø	Pilot pressure min.	Operating pressure 3.) max. + 185 °C	Article no.
	DN	[mm]	[bar(g)]	[bar(g)]	
ANSI B16.5					
A (CF A) see control functions 1.)	15	50 (D)	5.2	25	203095
	20	50 (D)	5.2	16	203096
		70 (M)	4.8	25	203097
	25	50 (D)	5.2	9	203098
		70 (M)	4.8	16	203099
	40	70 (M)	4.8	6	203100
		90 (N)	5.0	16	203101
	50	90 (N)	5.0	10	203102
		130 (P)	5.0	25 (20 2.))	218419
	65	90 (N)	5.0	5	239525
		130 (P)	5.6	16 (15 2.))	239527
		225 (L)	3.9	25 (15) 2.)	20060530
	80	130 (P)	5.6	10	239529
		225 (L)	5.6	25 (12.5) 2.)	20060531
	100	130 (P)	5.6	6	239532
		225 (L)	5.6	16 (10) 2.)	20060532
JIS 10K					
A (CF A) see control functions 1.)	15	50 (D)	5.2	25	203111
	20	50 (D)	5.2	16	203112
		70 (M)	4.8	25	203113
	25	50 (D)	5.2	9	203114
		70 (M)	4.8	16	203115
	40	70 (M)	4.8	6	203118
		90 (N)	5.0	16	203121
	50	90 (N)	5.0	10	203122
		130 (P)	5.0	25 (20 2.))	218471
	65	90 (N)	5.0	5	239526
		130 (P)	5.6	16 (15 2.))	219537
		225 (L)	3.9	25 (15) 2.)	20060533
	80	130 (P)	5.6	10	239530
		225 (L)	5.6	25 (12.5) 2.)	20060534
	100	130 (P)	5.6	6	239533
		225 (L)	5.6	16 (10) 2.)	20060535

1.) Further information can be found in chapter "2. Control functions" on page 4.
2.) According to pressure equipment directive 2014/68/EU for compressible fluids of group 1 (dangerous gases and vapours according to article 4, paragraph (1), c), i), first indent)
3.) Observe operating limits, see "6.2. Operating limits" on page 20

Further variants on request

Approval
Food processing, drinking water, oxygen, fuel gases, explosion protection

Pressure
Other variants for operating pressures up to 25 bar(g)
Vacuum variant down to - 0.9 bar(g)

Material
Seal: NBR, FKM, EPDM

Temperature
High temperature variant up to + 230 °C
Hot water variant up to + 200 °C
Low temperature variant down to - 40 °C

Process connection
Clamp connection, welded connection

DTS 1000112108 EN Version: AH Status: RL (released | freigegeben | valide) printed: 28.07.2026

valvesgo.com

Valves with flow direction above seat

Control function	Nominal diameter (port connection)	Actuator size Ø	Pilot pressure min.	Operating pressure 3.) max. + 185 °C	Article no.	Article no. certified ATEX II 2GD mechanical
	DN	[mm]	[bar(g)]	[bar(g)]		
DIN EN 1092 - 1						
A (CF A) see control functions 1.)	15	50 (D)	See Diagram 2.)	16	203086	260145
	20	50 (D)		16	203087	260146
	25	50 (D)		16	203088	260151
	32	70 (M)		16	203091	260153
	40	70 (M)		16	203092	260154
	50	70 (M)		12	204973	260157
		90 (N)		16	203094	260158

Control function	Nominal diameter (port connection)	Actuator size Ø	Pilot pressure min.	Operating pressure 3.) max. + 185 °C	Article no.
	DN	[mm]	[bar(g)]	[bar(g)]	
ANSI B16. 5					
A (CF A) see control functions 1.)	15	50 (D)	See Diagram 2.)	16	203103
	20	50 (D)		16	203104
	25	50 (D)		16	203105
	40	70 (M)		16	203107
	50	70 (M)		12	204974
		90 (N)		16	203109
JIS 10K					
A (CF A) see control functions 1.)	15	50 (D)	See Diagram 2.)	16	203123
	20	50 (D)		16	203124
	25	50 (D)		16	203125
	40	70 (M)		16	203127
	50	70 (M)		12	204975
		90 (N)		16	203129

1.) Further information can be found in chapter "2. Control functions" on page 4.
2.) See diagram in chapter "" on page 18
3.) Observe operating limits, see "6.2. Operating limits" on page 20

Further variants on request

Approval
Food processing, drinking water, oxygen, fuel gases, explosion protection

Pressure
Other variants for operating pressures up to 25 bar(g)
Vacuum variant down to - 0.9 bar(g)

Material
Seal: NBR, FKM, EPDM

Temperature
High temperature variant up to 230 °C
Hot water variant up to 200 °C
Low temperature variant down to - 40 °C

Process connection
Clamp connection, welded connection

DTS 1000112108 EN Version: AH Status: RL (released | freigegeben | valide) printed: 28.07.2026

valvesgo.com