Digital electropneumatic positioner for integrated mounting on process control valves

- Compact and robust stainless steel design
- Start-up with automatic TUNE function
- Contact-free position sensor
- Integrated pilot air duct in the actuator
- AS interface, IO-Link or Bürkert system bus (büS)

Product variants described in the data sheet may differ from the product presentation and description.

Can be combined with

Type 2300
Pneumatically operated 2-way angle seat control valve ELEMENT

Type 2301
Pneumatically operated 2-way Globe Control Valve

Type 2103
2/2-way diaphragm valve with pneumatic stainless steel actuator (Type ELEMENT) for decentralised automation

Type description

Compact positioner for integrated mounting on pneumatically controlled process control valves. The set-point value setting default occurs via standard signal 4 - 20 mA and/or via AS interface. A sensor element with contactless function records the valve spindle position. Simple start-up via automatic TUNE function and setting with the aid of DIP switch:

- sealing threshold
- characteristic selection
- inversion of direction
- manual/automatic operating state switchover
- digital input

Additional options available for parametrising using device DTM. A software interface can be used for the linearisation of the operating characteristic with the aid of a freely programmable characteristic, amongst other things. The status indicator functions using LEDs. An analogue position feedback can be optionally integrated.

DTS 1000110879 EN Version: X Status: RL (released | freigegeben | valide) printed: 26.08.2025

© Christian Bürkert GmbH & Co. KG, Subject to alteration

valvesgo.com

Table of contents

1. General technical data 3

1.1. Digital electropneumatic positioner, Type 8694 ... 3
1.2. Without fieldbus communication: 24 V DC ... 5
1.3. With fieldbus communication: AS-Interface ... 5
1.4. With digital communication: IO-Link ... 6
1.5. With digital communication: Bürkert system bus (büS) ... 6

2. Approvals and conformities 7

2.1. General notes ... 7
2.2. Conformity ... 7
2.3. Standards ... 7
2.4. Explosion protection ... 7
2.5. North America (USA/Canada) ... 7
2.6. Others ... 7
China Compulsory Certification (CCC) ... 7

3. Materials 8

3.1. Material specifications ... 8

4. Dimensions 8

4.1. Mounting on ELEMENT control valve Type 23xx / 2103 ... 8

5. Product connections 9

5.1. Electrical connection ... 9
Without fieldbus communication 24 V DC ... 9
Cable gland ... 9
AS-Interface connection ... 10
IO-Link connection ... 10
Bürkert system bus (büS connection) ... 10

6. Performance specifications 11

6.1. Signal flow diagram ... 11
Position control loop ... 11
Additional software options of the TopControl BASIC positioner Type 8694 (extract) ... 11
6.2. Interface diagram ... 12
Variant without fieldbus communication ... 12
Variant with fieldbus communication ... 12

7. Product installation 13

7.1. Combination options with pneumatic process valves ... 13

8. Ordering information 14

8.1. Bürkert eShop ... 14
8.2. Bürkert product filter ... 14
8.3. Ordering chart ... 15
Linear displacement sensor/internal control air supply ... 15
Rotary displacement sensor/internal control air supply ... 16
8.4. Ordering chart accessories ... 17
Standard accessories ... 17
Adapter kits ... 17

DTS 1000110879 EN Version: X Status: RL (released | freigegeben | valide) printed: 26.08.2025

valvesgo.com

1. General technical data

1.1. Digital electropneumatic positioner, Type 8694

Product properties	
Dimensions	Further information can be found in chapter "4. Dimensions" on page 8.
Material	
Body	PPS, stainless steel
Seal	EPDM
Cover	PC
Operation	
Operating keys	2
DIP switch	Integrated
Service interface	Connection to PC via USB büS interface set
Configuration tool	Bürkert Communicator
Commissioning	
Initialisation of positioner	Automatically by X.TUNE function (automatic adjustment of positioner)
Manual override of pilot valve	Yes
Status display	
Display of the device and valve status	Multicoloured LEDs
Communication	
Fieldbus	AS-Interface
Digital	IO-Link, Bürkert system bus (büS) (based on CANopen)
Performance data	
Position sensor	
Measurement principle	Linear: inductive Rotary: magnetic
Position detection module	Contactless analogue position sensor (wear-free)
Stroke range	
Valve spindle	Linear: 3...45 mm Rotary: 30...180°
Electrical data	
Operating voltage	24 V DC ± 25 % UL: NEC Class 2
Residual ripple	Max. 10 %
Power consumption	≤ 3.5 W
Protection class	III according to DIN EN 61140
Electrical connection	
Multipole variant	M12, 8-pin resp. 4- or 5-pin according to device variant (see "5. Product connections" on page 9)
Cable gland variant	M16 × 1.5 (cable Ø 5...10 mm) with terminals for cable cross-sections 0.14...1.5 mm²
Pneumatic data	
Control medium	**Neutral gases, air, quality class according to ISO 8573 - 1**
Dust content	Class 7 (< 40 µm particle size)
Particle density	Class 5 (< 10 mg/m³)
Pressure dew point	Class 3 (≤ - 20 °C or min. 10 °C below the lowest operating temperature)
Oil content	Class X (< 25 mg/m³)
Air supply filter	**Exchangeable**
Mesh size	Approx. 0.1 mm
Supply pressure	
Low air capacity	0...7 bar [1.)]
High air capacity	3...7 bar
Pilot air port	Threaded connection G ⅛, stainless steel

DTS 1000110879 EN Version: X Status: RL (released | freigegeben | valide) printed: 26.08.2025

valvesgo.com

valvesgo.com

Positioning system	
Low air capacity	
Single-acting	7 l_N/min for aeration and ventilation (Q_{Nn} value according to definition at pressure drop from 7 to 6 bar abs)
Actuator series/size	Type 23xx, actuator Ø 70/90 mm
High air capacity	
Single-acting	130 l_N/min for aeration and ventilation (Q_{Nn} value according to definition at pressure drop from 7 to 6 bar abs)
Actuator series/size	Type 23xx, actuator Ø 130/225 mm Type 27xx, actuator Ø 175/225 mm
Approvals and conformities	
Explosion protection	
Ignition protection class	II 3D Ex tc IIIC T135 °C Dc II 3G Ex ec IIC T4 Gc
ATEX	BVS 14 ATEX E 008 X II 3D Ex tc IIIC T135 °C Dc II 3G Ex ec IIC T4 Gc
IECEx	IECEx BVS 14.0009 X Ex tc IIIC T135 °C Dc Ex ec IIC T4 Gc
Further information can be found in chapter **"2.4. Explosion protection" on page 7**.	
North America (USA/Canada)	
UL Listed for the USA and Canada	cULus certificate: E238179 Further information can be found in chapter **"2.5. North America (USA/Canada)" on page 7**.
FM Explosion Protection	Increased Safety for Class I, Zone 2, AEx ec IIC T4 Gc hazardous (classified) locations, indoors and outdoors (IP54). Alternatively marked as Class I Division 2 Groups A, B, C, and D; T4. Further information can be found in chapter **"2.5. North America (USA/Canada)" on page 7**.
Others	
China Compulsory Certification (CCC)	The products with Ex approval are suitable for import and use for hazardous applications in China. Further information can be found in chapter **"2.6. Others" on page 7**.
Further information can be found in chapter **"2. Approvals and conformities" on page 7**.	
Environment and installation	
Operating conditions	
Ambient temperature	-10...+60 °C
Degree of protection	IP65/IP67 according to EN 60529, 4X according to NEMA 250 Standard
Operating altitude	Up to 2000 m above sea level
Installation and mechanical data	
Mounting variant	Direct mounting
Installation position	As required, preferably with actuator in upright position
Valve actuator (type, size)	ELEMENT Type 23xx, actuator size Ø 70/90/130/225 mm CLASSIC Type 27xx, actuator size Ø 175/225 mm
Adapter kit	Further information can be found in chapter **"Adapter kits" on page 17**.

1.) The supply pressure applied must be 0.5 to 1 bar above the minimum required pilot pressure of the valve actuator.

DTS 1000110879 EN Version: X Status: RL (released | freigegeben | valide) printed: 26.08.2025

valvesgo.com

1.2. Without fieldbus communication: 24 V DC

Electrical data	
Operating voltage	24 V DC ± 25 % UL: NEC Class 2
Residual ripple	10 %
Power consumption	≤ 3.5 W
Protection class	III according to DIN EN 61140
Electrical connection	
Multipole variant	M12, 8-pin
Cable gland variant	M16 × 1.5 (cable Ø 5...10 mm) with terminals for cable cross-sections 0.14...1.5 mm²
Input/Output	
Digital input	1 digital input 0...5 V = log „0“, 10...30 V = log „1“
Analogue output	1 output (optional) 0/4...20 mA
Input data set-point	
Set-point signal	
Default set-point value setting	4...20 mA 0...20 mA (configurable via communication interface)
Input resistance	75 Ω

1.3. With fieldbus communication: AS-Interface

Product properties	
Profile	S- 7.3.4 output: 16 Bit set-point/certificate no. 137401 according to specification V3.0 S- 7.A.5 output: 16 Bit set-point; input: 16 Bit actual value/certificate no. 137401 according to specification V3.0
Electrical data	
Operating voltage	
Via Bus cable	Via ASi power supply 29.5...31.6 V DC (according to specification), UL: NEC Class 2
Protection class	III according to DIN EN 61140
Power consumption	
Maximum current consumption	150 mA
Electrical connection	M12, 4-pin stainless steel plug, with 80 cm cable
Unit with additional actuator supply (AUX Power)	External power supply 24 V DC ± 10 % (the power supply unit must contain a safe isolation according to IEC 364 - 4 - 41 (PELV or SELV))
System supply	Max. 150 mA without additional actuator supply (AUX Power) Max. 50 mA with additional actuator supply
Actuator supply	Max. 50 mA with additional actuator supply

DTS 1000110879 EN Version: X Status: RL (released | freigegeben | valide) printed: 26.08.2025

valvesgo.com

1.4. With digital communication: IO-Link

Electrical data	
Electrical connection	M12 × 1, 5-pin, A-coded
IO-Link specification	1.1
SIO mode	No
VendorID	0×0078, 120
DeviceID	See IODD file (The IODD file can be downloaded from our **website Type 8694** ▶, see Software > Device Description Files)
Transmission rate	230.4 kbit/s (COM 3)
Data storage	Yes
Cable length	Max. 20 m
Port Class	A and B
Power supply	Via IO-Link
Port Class A	
Operating voltage	24 V DC ± 25 % (according to specification)
Current consumption	Max. 150 mA
Port Class B	
Operating voltage	
System supply (Pin 1 + 3)	24 V DC ± 25 % (according to specification)
Actuator supply (Pin 2 + 5)	24 V DC ± 25 % (according to specification)
Current consumption	
System supply (Pin 1 + 3)	Max. 50 mA
Actuator supply (Pin 2 + 5)	Max. 100 mA
Total power consumption overall	Max. 3.5 W

1.5. With digital communication: Bürkert system bus (büS)

Electrical data	
Operating voltage	18...30 V DC (according to specification)
Electrical connection	M12 × 1, 5-pin, A-coded
Current consumption	Max. 150 mA
Total power consumption overall	Max. 3.5 W

DTS 1000110879 EN Version: X Status: RL (released | freigegeben | valide) printed: 26.08.2025

valvesgo.com

valvesgo.com

2. Approvals and conformities

2.1. General notes

- The approvals and conformities listed below must be stated when making enquiries. This is the only way to ensure that the product complies with all required specifications.
- Not all available variants can be supplied with the below mentioned approvals or conformities.

2.2. Conformity

In accordance with the Declaration of Conformity, the product is compliant with the EU Directives.

2.3. Standards

The applied standards which are used to demonstrate compliance with the EU Directives are listed in the EU-Type Examination Certificate and/or the EU Declaration of Conformity.

2.4. Explosion protection

Approval	Description
	Optional: Explosion protection **ATEX:** BVS 14 ATEX E 008 X II 3D Ex tc IIIC T135 °C Dc II 3G Ex ec IIC T4 Gc **IECEx:** IECEx BVS 14.0009 X Ex tc IIIC T135 °C Dc Ex ec IIC T4 Gc

2.5. North America (USA/Canada)

Approval	Description
	Optional: UL Listed for the USA and Canada The products are UL Listed for the USA and Canada according to: • UL 61010-1 (ELECTRICAL EQUIPMENT FOR MEASUREMENT, CONTROL, AND LABORATORY USE – Part 1: General Requirements) • CAN/CSA-C22.2 No. 61010-1
	Optional: FM (Factory Mutual) – Explosion Protection Increased Safety for Class I, Zone 2, AEx ec IIC T4 Gc hazardous (classified) locations, indoors and outdoors (IP54). Alternatively marked as Class I Division 2 Groups A, B, C, and D; T4.

2.6. Others

China Compulsory Certification (CCC)

Conformity	Description
	Optional: China Compulsory Certification (CCC) The products with Ex approval are suitable for import and use for hazardous applications in China.

DTS 1000110879 EN Version: X Status: RL (released | freigegeben | valide) printed: 26.08.2025

valvesgo.com

3. Materials

3.1. Material specifications

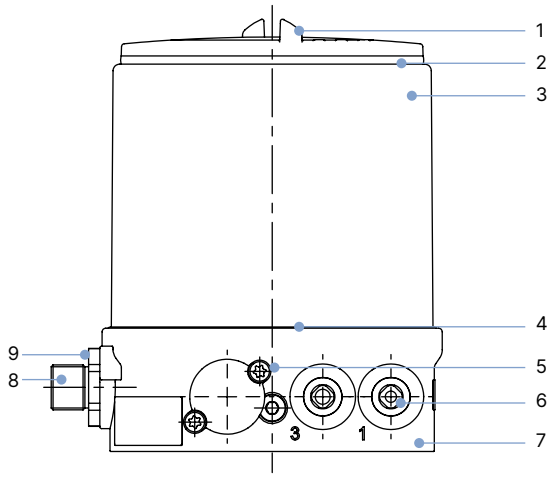

No.	Element	Material
1	Cover	PC
2	Seal	EPDM
3	Body casing	Stainless steel
4	Seal	EPDM
5	Screws	Stainless steel
6	Push-in connector Threaded port G ⅛	POM/stainless steel Stainless steel
7	Basic housing	PPS
8	M12 plug connector	Stainless steel
9	Screws	Stainless steel

4. Dimensions

4.1. Mounting on ELEMENT control valve Type 23xx / 2103

Note:
Dimensions in mm, unless otherwise stated

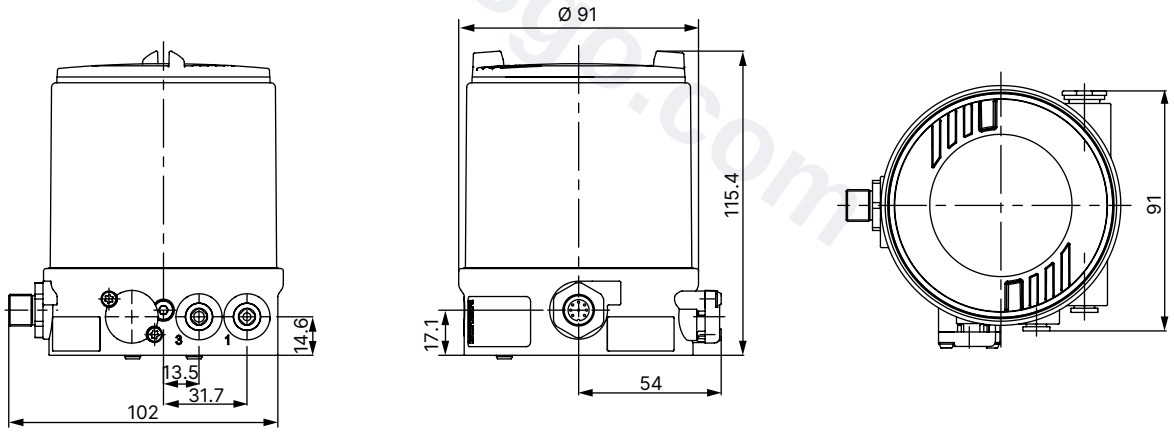

DTS 1000110879 EN Version: X Status: RL (released | freigegeben | valide) printed: 26.08.2025

valvesgo.com

5. Product connections

5.1. Electrical connection

Without fieldbus communication 24 V DC

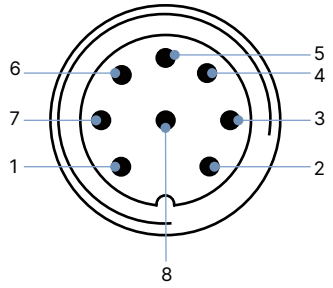

Pin	Pin assignment
1	Set-point + (0/4...20 mA)
2	Set-point GND
3	Operating voltage GND
4	Operating voltage + 24 V DC
5	Digital input +
6	Digital input GND
7	Analogue position feedback GND
8	Analogue position feedback + (option)

Cable gland

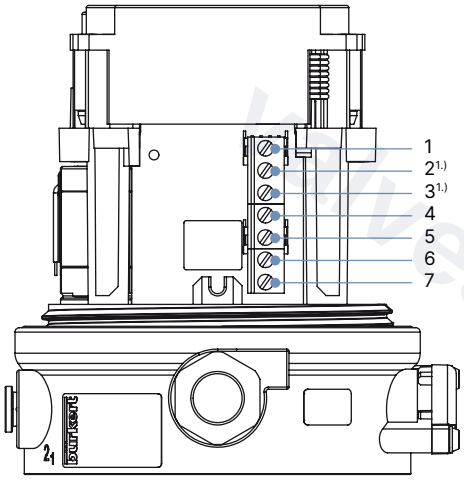

Input signal

Terminal	Pin assignment
1	Digital input +
4 5	Set-point + Set-point GND
6 7	Power supply + Power supply GND

Output signal with analogue feedback option

Terminal	Pin assignment
2 3	Analogue feedback + Analogue feedback GND

valvesgo.com

DTS 1000110879 EN Version: X Status: RL (released | freigegeben | valide) printed: 26.08.2025

valvesgo.com

AS-Interface connection

M12 circular plug, 4-pin, without external power supply

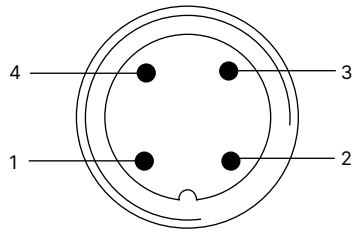

Pin	Description	Pin assignment
1	Bus +	Bus cable AS-Interface +
2	NC	Not assigned
3	Bus –	Bus cable AS-Interface –
4	NC	Not assigned

M12 circular plug, 4-pin, with external power supply (on request)

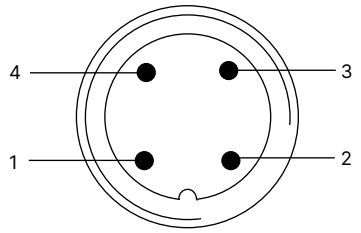

Pin	Description	Pin assignment
1	Bus +	Bus cable AS-Interface +
2	GND (optional)	External power supply
3	Bus –	Bus cable AS-Interface –
4	24 V + (optional)	External power supply

IO-Link connection

M12 circular plug, 5-pin, Port Class A

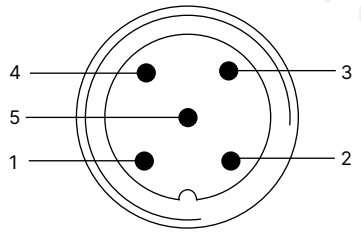

Pin	Description	Pin assignment	
1	L +	24 V DC	System supply
2	I/Q	NC	Not connected
3	L -	0 V (GND)	System supply
4	C/Q	IO-Link	Communication
5	NC	NC	Not connected

M12 circular plug, 5-pin, Port Class B

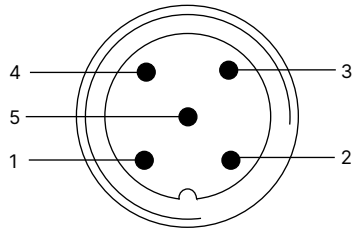

Pin	Description	Pin assignment	
1	L +	24 V DC	System supply
2	P24	24 V DC	Actuator supply
3	L -	0 V (GND)	System supply
4	C/Q	IO-Link	Communication
5	N24	0 V (GND)	Actuator supply

Bürkert system bus (büS connection)

M12 circular plug, 5-pin

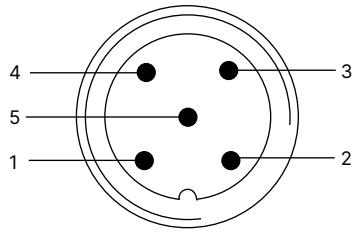

Pin	Description	Cable colour
1	CAN shielding	CAN shielding
2	+ 24 V DC ± 25 %, max. residual ripple 10 %	Red
3	GND/CAN_GND	Black
4	CAN_H	White
5	CAN_L	Blue

DTS 1000110879 EN Version: X Status: RL (released | freigegeben | valide) printed: 26.08.2025

valvesgo.com

6. Performance specifications

6.1. Signal flow diagram

Position control loop

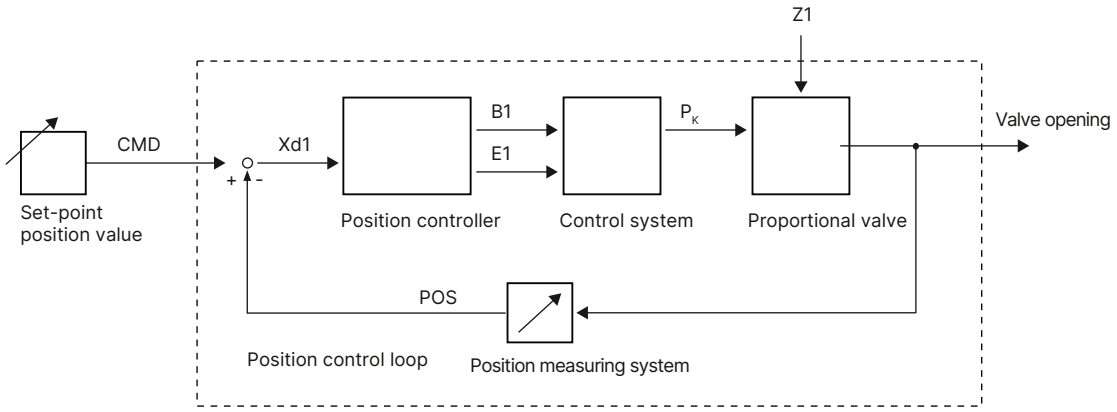

Additional software options of the TopControl BASIC positioner Type 8694 (extract)

- X.Tune function for automatic start-up
- Linear characteristic
- Close-tight function
- Reversal of the operating direction of the set-point signal
- Switching between manual and automatic mode
- Digital input
- Device operation via service büS interface and communicator
- Set-point value selection (0/4...20 mA)
- Position controller parametrisation
- Programmable stroke range limit
- Limitation of opening/closing time
- Safety position definition
- Signal error detection
- Digital input configuration
- Analogue output configuration position set-point/feedback
- Setting set-point/actuator direction (rise/fall)
- Resetting the device to factory settings

DTS 1000110879 EN Version: X Status: RL (released | freigegeben | valide) printed: 26.08.2025

valvesgo.com

6.2. Interface diagram

Variant without fieldbus communication

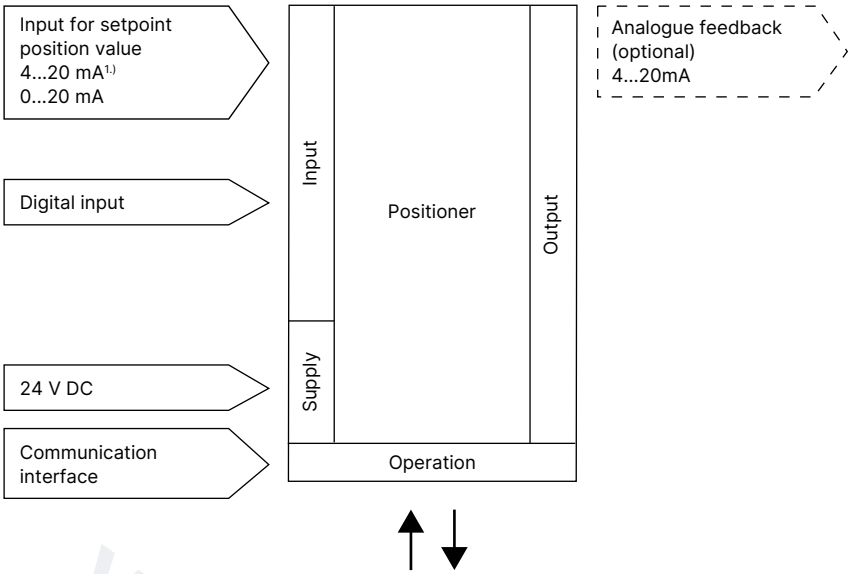

1.) Default setting

Variant with fieldbus communication

With AS-Interface, IO-Link and Bürkert system bus (büS)

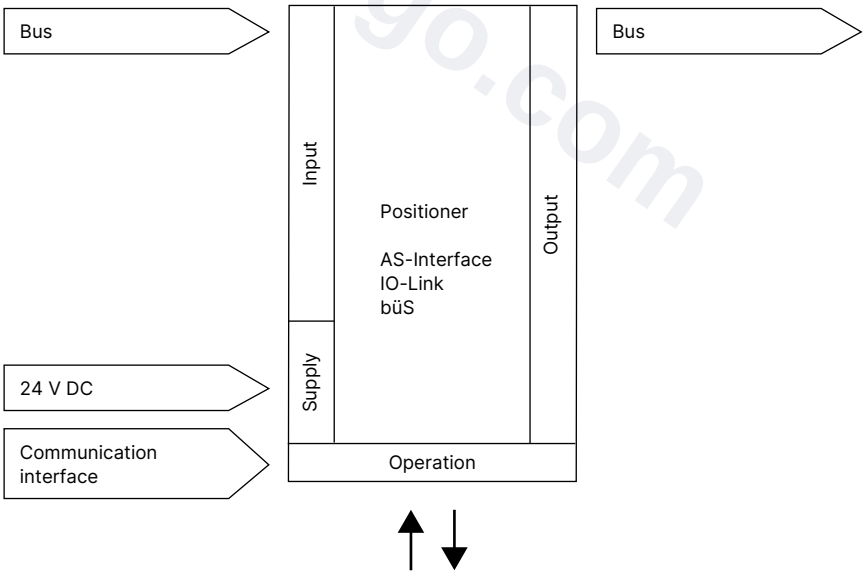

DTS 1000110879 EN Version: X Status: RL (released | freigegeben | valide) printed: 26.08.2025

valvesgo.com

valvesgo.com

7. Product installation

7.1. Combination options with pneumatic process valves

Note:
A **TopControl control valve system** consists of a **BASIC Positioner Type 8694** and an **ELEMENT control valve Type 23xx** resp. **Type 2103.**

The following information is required to select a complete system:

- **Article no**. of the desired **TopControl BASIC positioner,** see **data sheet Type 8694**
- **Article no**. of the desired **control valve Type 23xx / 2103,** see **data sheet Type 2300 ▸, Type 2301 ▸** and **Type 2103 ▸**

You order two components and receive a completely assembled and tested valve.

Example of variations of the control valve system

Positioner BASIC	Pneumatic process control valves			
Type 8694	**Type 2301 ▸** Globe valve	**Type 2300 ▸** Angle seat valve	**Type 2103 ▸** Diaphragm valve	**Hygienic process valve (third-party)**
	Control valve system			
	Type 8802-GD-L Control valve system ELEMENT Type 2301 + Type 8694	**Type 8802-YG-L** Control valve system ELEMENT Type 2300 + Type 8694	**Type 8802-DF-L** Control valve system ELEMENT Type 2103 + Type 8694	**Mounting on third-party actuators** [1.)]

1.) See data sheet **Adaptations for third-party actuators Type KK01 ▸** or contact the appropriate Bürkert sales office.

DTS 1000110879 EN Version: X Status: RL (released | freigegeben | valide) printed: 26.08.2025

valvesgo.com

8. Ordering information

8.1. Bürkert eShop

Bürkert eShop – Easy ordering and quick delivery

You want to find your desired Bürkert product or spare part quickly and order directly? Our online shop is available for you 24/7. Sign up and enjoy all the benefits.

Order online now

8.2. Bürkert product filter

Bürkert product filter – Get quickly to the right product

You want to select products comfortably based on your technical requirements?
Use the Bürkert product filter and find suitable articles for your application quickly and easily.

Try out our product filter

DTS 1000110879 EN Version: X Status: RL (released | freigegeben | valide) printed: 26.08.2025

valvesgo.com

valvesgo.com

8.3. Ordering chart

Linear displacement sensor/internal control air supply

Note:
All standard variants are UL-approved.

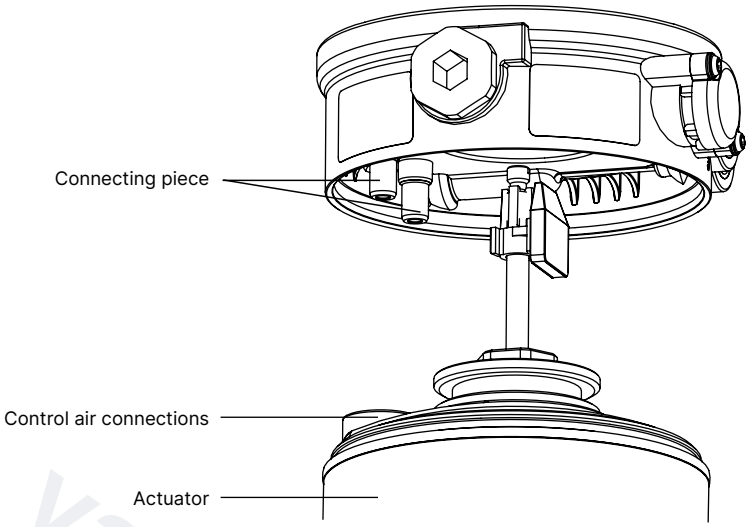

Circuit function Pilot valve system	Communication	Electrical connection	Feedback-Signal	Pilot air ports threaded connection	Article no.		
					Standard	ATEX II Kat. 3G/D, IECEx, CCC 1.)	ATEX II Kat. 3G/D IECEx / cFMus Cl. I Div. II
Actuator series ELEMENT Type 23xx, actuator size Ø 70/90 mm							
Low air capacity single-acting	–	M12 plug connector	–	G ⅛	323240	389216	–
			Analogue	G ⅛	323256	389217	–
		Cable gland	–	G ⅛	323248	389214	20054455
			Analogue	G ⅛	323266	389215	20048377
	AS-Interface S-7.A.5	M12 plug connector/ 80 cm cable	Digital	G ⅛	20088322	20088328	–
	IO-Link Port Class A	M12 multipole	Digital	G ⅛	20032463	20032469	–
	IO-Link Port Class B	M12 multipole	Digital	G ⅛	323232	389233	–
	büS	M12 multipole	Digital	G ⅛	323236	389237	–
Actuator series ELEMENT Type 23xx, actuator size Ø 130/225 mm							
High air capacity single-acting	–	M12 plug connector	–	G ⅛	323241	389225	–
			Analogue	G ⅛	323258	389226	–
		Cable gland	–	G ⅛	323249	389223	20054459
			Analogue	G ⅛	323267	389224	20054460
	AS-Interface S-7.A.5	M12 plug connector/ 80 cm cable	Digital	G ⅛	20088324	20088330	–
	IO-Link Port Class A	M12 multipole	Digital	G ⅛	20032465	20032470	–
	IO-Link Port Class B	M12 multipole	Digital	G ⅛	323233	389234	–
	büS	M12 multipole	Digital	G ⅛	323237	389238	–

1.) CCC (China Compulsory Certificate) for device variants with Ex approval

DTS 1000110879 EN Version: X Status: RL (released | freigegeben | valide) printed: 26.08.2025

valvesgo.com

Rotary displacement sensor/internal control air supply

Note:
All standard variants are UL-approved.

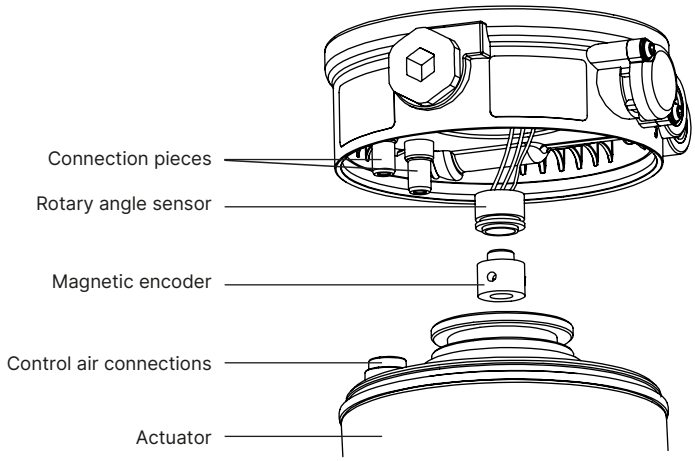

Circuit function Pilot valve system	Communication	Electrical connection	Feedback-Signal	Article no.		
				Standard	ATEX II Kat. 3G/D, IECEx, CCC 1.)	ATEX II Kat. 3G/D IECEx / cFMus Cl. I Div. II
Actuator series ELEMENT Type 23xx, actuator size Ø 70/90 mm						
Low air capacity single-acting	–	M12 plug connector	–	o. r.	o. r.	–
			Analogue	20126128	o. r.	–
		Cable gland	–	20068451	20068389	20054450
			Analogue	20068414	20126129	20126131
	AS-Interface S-7.A.5	M12 plug connector/ 80 cm cable	Digital	20088325	o. r.	–
	IO-Link Port Class A	M12 multipole	Digital	20050837	–	–
	IO-Link Port Class B	M12 multipole	Digital	o. r.	o. r.	–
	Bürkert system bus	M12 multipole	Digital	20030073	o. r.	–
Actuator series ELEMENT Type 23xx, actuator size Ø 130/225 mm						
High air capacity single-acting	–	M12 plug connector	–	o. r.	o. r.	–
			Analogue	20055801	o. r.	–
		Cable gland	–	20061720	20126130	o. r.
			Analogue	20068978	20087617	20126134
	AS-Interface S-7.A.5	M12 plug connector/ 80 cm cable	Digital	20088326	o. r.	–
	IO-Link Port Class A	M12 plug connector	Digital	20084208	o. r.	–

o. r. = on request
1.) CCC (China Compulsory Certificate) for device variants with Ex approval

DTS 1000110879 EN Version: X Status: RL (released | freigegeben | valide) printed: 26.08.2025

valvesgo.com

8.4. Ordering chart accessories

Standard accessories

Note:
Must be ordered separately.

Description	Article no.
M12 circular socket with cable, 8-pin, cable length: 5 m, for input and output signals	919267
AS-interface flat cable clamp, M12 outlet, stainless steel outlet	799646
Silencer G ⅛	780779
USB büS interface set 2 (Type 8923) for connection to the Bürkert Communicator software: including büS stick, connection cable to M12 plug, M12 connection cable on micro USB for the büS service interface and Y distributor, cable length: 0.7 m	772551
büS cable extension, M12, cable length: 1 m	772404
büS cable extension, M12, cable length: 3 m	772405
büS cable extension, M12, cable length: 5 m	772406
büS cable extension, M12, cable length: 10 m	772407
Sensor puck (spare part)	682240
Software Bürkert Communicator	**Type 8920** ▶

Adapter kits

Note:
Must be ordered separately.

Adapter kits for third-party actuators can be found in the **data sheet Adaptations for third-party actuators Type KK01** ▶ or contact the appropriate Bürkert sales office.

Description	Actuator size	Control function	Article no.
Attachment kit for Type 21xx/23xx actuator series	Ø 70/90/130 mm	Universal	679917
Attachment kit for Type 21xx/23xx actuator series	Ø 225 mm	Universal	60025906

valvesgo.com

DTS 1000110879 EN Version: X Status: RL (released | freigegeben | valide) printed: 26.08.2025

valvesgo.com