bürkert
FLUID CONTROL SYSTEMS

Type 8694

Positioner Top Control Basic

Electropneumatic position controller

Operating Instructions

MAN 1000329139 EN Version: E Status: RL (released | freigegeben) printed: 23.07.2026

valvesgo.com

valvesgo.com

MAN 1000329139 EN Version: E Status: RL (released | freigegeben) printed: 23.07.2026

valvesgo.com

We reserve the right to make technical changes without notice.
Technische Änderungen vorbehalten.
Sous réserve de modifications techniques.

© Bürkert Werke GmbH & Co. KG, 2008 - 2021

Operating Instructions 2111/11_EN-EN_00805886 / Original DE

Positioner Type 8694

Table of Contents

1 OPERATING INSTRUCTIONS 7

1.1 Symbols 7

1.2 Definition of term / abbreviation 7

2 AUTHORIZED USE 8

2.1 Restrictions 8

3 BASIC SAFETY INSTRUCTIONS 9

4 GENERAL INFORMATION 10

4.1 Contact address 10

4.2 Warranty 10

4.3 Trademarks 10

4.4 Information on the internet 10

5 SYSTEM DESCRIPTION 11

5.1 Intended application area 11

5.2 Function of the positioner and combination with valve types 11

5.3 Features of the valve types 12

5.4 Structure of the positioner 13

5.4.1 Representation 13

5.4.2 Features 14

5.4.3 Function diagram of the positioner with single-acting actuator 15

5.5 Type 8694 positioner (position controller) 16

5.5.1 Schematic representation of the position control Type 8694 16

5.5.2 Functions of the position controller software 17

5.6 Interfaces of the positioner 19

6 TECHNICAL DATA 20

6.1 Conformity 20

6.2 Standards 20

6.3 Licenses 20

6.4 Operating conditions 20

MAN 1000329139 EN Version: E Status: RL (released | freigegeben) printed: 23.07.2026

valvesgo.com

6.5 Mechanical data **20**
6.6 Pneumatic data **21**
6.7 Type labels **21**
6.7.1 Type label standard 21
6.7.2 UL type label 22
6.7.3 UL additional label 22
6.8 Electrical data **22**
6.8.1 Electrical data without bus control 24 V DC 22
6.8.2 Electrical data with AS-Interface bus control 23
6.9 Factory settings of the positioner **24**

7 CONTROL AND DISPLAY ELEMENTS **25**
7.1 Operating status **25**
7.2 Control and display elements of the positioner **25**
7.3 Configuration of the keys **27**
7.4 Function of the DIP switches **29**
7.5 Display of the LEDs **31**
7.6 Error messages **32**
7.6.1 Error messages in MANUAL and AUTOMATIC operating statuses 32
7.6.2 Error messages while the ***X.TUNE*** function is running 32

8 INSTALLATION **33**
8.1 Safety instructions **33**
8.2 Installation of the positioner Type 8694 on process valves of series 2103, 2300 and 2301 ..... **33**
8.3 Installing the positioner Type 8694 on process valves belonging to series 26xx and 27xx **36**
8.4 Rotating the actuator module **40**
8.5 Rotating the positioner for process valves belonging to series 26xx and 27xx **42**

9 PNEUMATIC INSTALLATION **43**
9.1 Manual actuation of the actuator via pilot valves **44**
9.1.1 Single-acting actuators (control function A and B) 44

10 ELECTRICAL INSTALLATION 24 V DC **46**
10.1 Safety instructions **46**

MAN 1000329139 EN Version: E Status: RL (released | freigegeben) printed: 23.07.2026

valvesgo.com

10.2 Electrical installation with circular plug-in connector ... 46

10.2.1 Designation of the contacts Type 8694 ... 46

10.2.2 Connection of the positioner Type 8694 ... 47

10.3 Electrical installation with cable gland ... 48

11 AS-INTERFACE INSTALLATION ... 51

11.1 AS-Interface connection ... 51

11.2 Maximum length of the bus line ... 51

11.3 Technical data for AS-Interface PCBs ... 51

11.4 Programming data ... 52

11.5 Communication sequence for the version S-7.A.5 profile ... 53

11.6 LED status display ... 54

11.7 Electrical installation AS-interface ... 55

11.7.1 Safety instructions ... 55

11.7.2 Connection with circular plug-in connector M12 x 1, 4-pole, male ... 56

11.7.3 Connection with multi-pole cable and ribbon cable terminal ... 56

12 START-UP ... 58

12.1 Safety instructions ... 58

12.2 Specifying the standard settings ... 58

12.2.1 Running the automatic adjustment ***X.TUNE*** ... ***58***

13 OPERATION AND FUNCTION ... 61

13.1 Basic functions ... 61

13.1.1 DIR.CMD -
Effective direction of the positioner set-point value ... 62

13.1.2 CUTOFF -
Sealing function for the positioner ... 63

13.1.3 CHARACT -
Select the transfer characteristic between input signal (position set-point value) and stroke ... 64

13.1.4 INPUT -
Enter the input signal ... 66

13.1.5 RESET -
Reset to factory settings ... 67

13.1.6 X.TUNE -
Automatic adjustment of the positioner to the relevant operating conditions ... 67

MAN 1000329139 EN Version: E Status: RL (released | freigegeben) printed: 23.07.2026

valvesgo.com

valvesgo.com

13.2 Auxiliary functions **68**

13.2.1 DIR.ACTUATOR -
Effective direction of the actuator 68

13.2.2 SPLITRANGE -
Signal split range 69

13.2.3 X.LIMIT -
Limiting the mechanical stroke range 70

13.2.4 X.TIME -
Limiting the control speed 71

13.2.5 X.CONTROL -
Parameterization of the positioner 72

13.2.6 SAFE POSITION -
Definition of the safe position 72

13.2.7 SIGNAL ERROR -
Configuration of signal level fault detection 73

13.2.8 BINARY INPUT -
Activation of the binary input 73

13.2.9 OUTPUT (optional) -
Configuration of the analog output 74

14 SAFETY END POSITIONS **75**

14.1 Safety end positions after failure of the electrical or pneumatic auxiliary power **75**

15 MAINTENANCE **76**

15.1 Safety instructions **76**

15.2 Service at the air intake filter **77**

16 ACCESSORIES **78**

16.1 Communications software **78**

16.1.1 USB interface 78

16.1.2 Download 78

17 DISASSEMBLY **79**

17.1 Safety instructions **79**

17.2 Disassembly the positioner **79**

18 PACKAGING AND TRANSPORT **81**

19 STORAGE **81**

20 DISPOSAL **81**

MAN 1000329139 EN Version: E Status: RL (released | freigegeben) printed: 23.07.2026

valvesgo.com

1 OPERATING INSTRUCTIONS

The operating instructions describe the entire life cycle of the device. Keep these instructions in a location which is easily accessible to every user, and make these instructions available to every new owner of the device.

Important safety information.

Read the operating instruction carefully and thoroughly. Study in particular the chapters entitled "Basic safety instructions" and "Authorized use".

▸ The operating instructions must be read and understood.

1.1 Symbols

DANGER!

Warns of an immediate danger.

▸ Failure to observe the warning will result in a fatal or serious injury.

WARNING!

Warns of a potentially dangerous situation.

▸ Failure to observe the warning may result in serious injuries or death.

CAUTION!

Warns of a possible danger.

▸ Failure to observe this warning may result in a moderate or minor injury.

NOTE!

Warns of damage to property.

▪ Failure to observe the warning may result in damage to the device or the equipment.

Indicates important additional information, tips and recommendations.

refers to information in these operating instructions or in other documentation.

▸ Designates an instruction to prevent risks.

→ Designates a procedure which you must carry out.

1.2 Definition of term / abbreviation

The term "device" used in these instructions always stands for the positioner Type 8694.

In these instructions, the abbreviation "Ex" always refers to "potentially explosive atmosphere".

MAN 1000329139 EN Version: E Status: RL (released | freigegeben) printed: 23.07.2026

valvesgo.com

2 AUTHORIZED USE

Non-authorized use of the positioner Type 8694 may be a hazard to people, nearby equipment and the environment.

The device is designed to be mounted on pneumatic actuators of process valves for the control of media.

- Do not expose the device to direct sunlight.
- Use according to the authorized data, operating conditions and conditions of use specified in the contract documents and operating instructions. These are described in the chapter entitled “6 Technical data”.
- The device may be used only in conjunction with third-party devices and components recommended and authorized by Bürkert.
- In view of the large number of options for use, before installation, it is essential to study and if necessary to test whether the positioner is suitable for the actual use planned.
- Correct transportation, correct storage and installation and careful use and maintenance are essential for reliable and faultless operation.
- Use the positioner Type 8694 only as intended.

2.1 Restrictions

If exporting the system/device, observe any existing restrictions.

valvesgo.com

MAN 1000329139 EN Version: E Status: RL (released | freigegeben) printed: 23.07.2026

3 BASIC SAFETY INSTRUCTIONS

These safety instructions do not make allowance for any

- contingencies and events which may arise during the installation, operation and maintenance of the devices.
- local safety regulations – the operator is responsible for observing these regulations, also with reference to the installation personnel.

DANGER!

Risk of injury from high pressure in the equipment/device.

- Before working on equipment or device, switch off the pressure and deaerate/drain lines.

Risk of electric shock.

- Before working on equipment or device, switch off the power supply and secure to prevent reactivation.
- Observe applicable accident prevention and safety regulations for electrical equipment.

General hazardous situations.

To prevent injury, ensure:

- In the potentially explosive atmosphere the positioner Type 8694 may be used only according to the specification on the separate approval sticker. For use observe the additional instructions enclosed with the device together with safety instructions for the potentially explosive atmosphere.
- Devices without a separate approval sticker may not be used in a potentially explosive atmosphere.
- That the system cannot be activated unintentionally.
- Installation and repair work may be carried out by authorized technicians only and with the appropriate tools.
- After an interruption in the power supply or pneumatic supply, ensure that the process is restarted in a defined or controlled manner.
- The device may be operated only when in perfect condition and in consideration of the operating instructions.
- The general rules of technology apply to application planning and operation of the device.

To prevent damage to property on the device, ensure:

- Do not feed any aggressive or flammable media into the pilot air port.
- Do not feed any liquids into the pilot air port.
- When unscrewing and screwing in the body casing or the transparent cap, do not hold the actuator of the process valve but the connection housing of Type 8694.
- Do not put any loads on the housing (e.g. by placing objects on it or standing on it).
- Do not make any external modifications to the device bodies. Do not paint the housing parts or screws.

MAN 1000329139 EN Version: E Status: RL (released | freigegeben) printed: 23.07.2026

valvesgo.com

valvesgo.com

NOTE!

Electrostatic sensitive components / modules.

The device contains electronic components, which react sensitively to electrostatic discharge (ESD). Contact with electrostatically charged persons or objects is hazardous to these components. In the worst case scenario, they will be destroyed immediately or will fail after start-up.

- Observe the requirements in accordance with EN 100 015 - 1 and to minimize or avoid the possibility of damage caused by sudden electrostatic discharge.
- Also ensure that you do not touch electronic components when the power supply is on.

4 GENERAL INFORMATION

4.1 Contact address

Germany

Bürkert Fluid Control System
Sales Center
Chr.-Bürkert-Str. 13-17
D-74653 Ingelfingen
Tel. + 49 (0) 7940 - 10 91 111
Fax + 49 (0) 7940 - 10 91 448
E-mail: info@burkert.com

International

Contact addresses can be found on the final pages of the printed operating instructions.

And also on the Internet at:

www.burkert.com

4.2 Warranty

The warranty is only valid if the positioner Type 8694 is used as intended in accordance with the specified application conditions.

4.3 Trademarks

Brands and trademarks listed below are trademarks of the corresponding companies / associations / organizations

Loctite Henkel Loctite Deutschland GmbH

4.4 Information on the internet

The operating instructions and data sheets for Type 8694 can be found on the Internet at:

www.burkert.com

MAN 1000329139 EN Version: E Status: RL (released | freigegeben) printed: 23.07.2026

valvesgo.com

5 SYSTEM DESCRIPTION

5.1 Intended application area

The positioner Type 8694 is designed to be mounted on pneumatic actuators of process valves for the control of media.

5.2 Function of the positioner and combination with valve types

Positioner Type 8694 is an electropneumatic position controller for pneumatically actuated control valves with single-acting actuators.

Together with the pneumatic actuator, the positioner forms a functional unit.

The control valve systems can be used for a wide range of control tasks in fluid technology and, depending on the application conditions, different process valves belonging to series 2103, 2300, 2301, 26xx or 27xx from the Bürkert range can be combined with the positioner. Angle-seat valves, diaphragm valves or ball valves fitted with a control cone are suitable.

"Figure 1" shows an overview of the possible combinations of positioner and different pneumatically actuated valves. Different actuator sizes and valve nominal widths, not illustrated here, are available for each type. More precise specifications can be found on the respective data sheets. The product range is being continuously expanded.

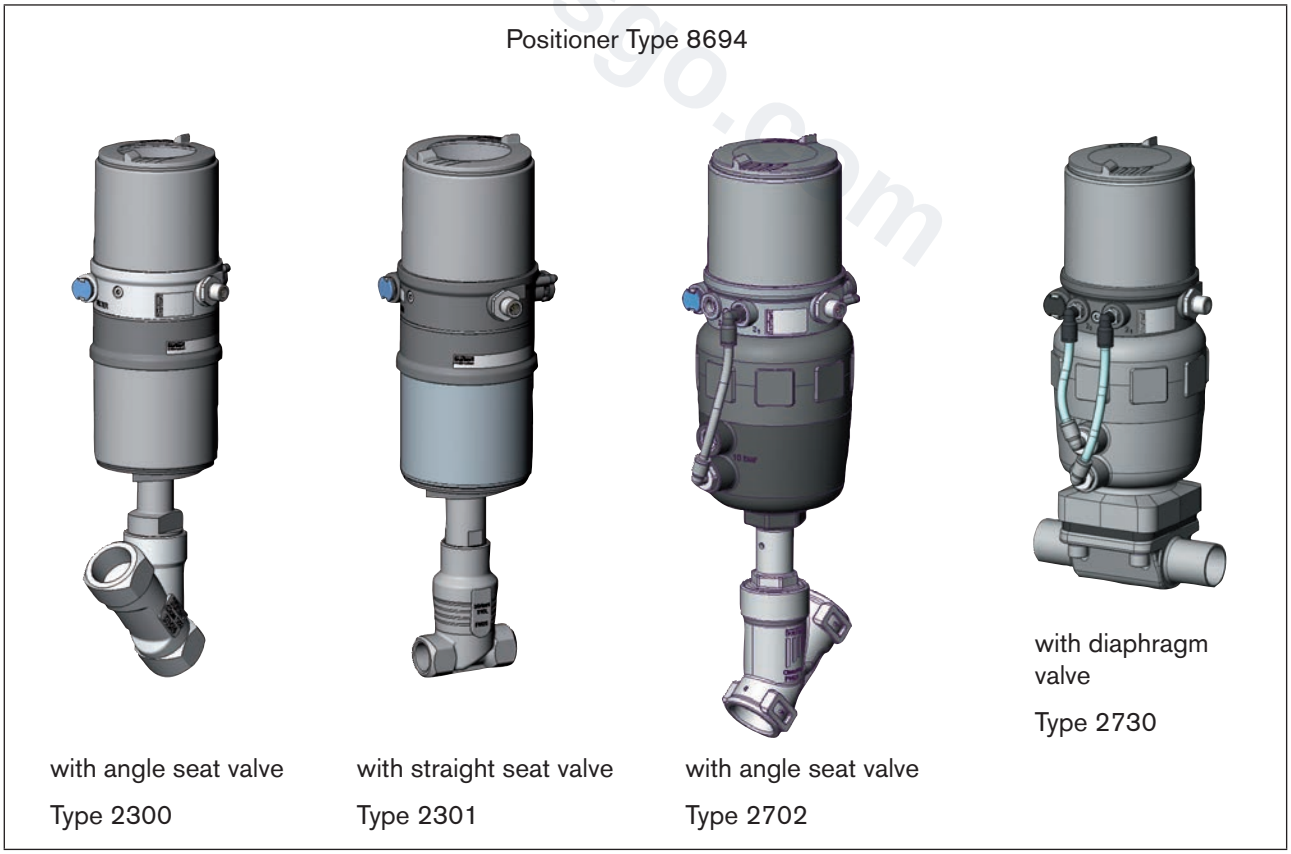

Figure 1: Overview of possible combinations

MAN 1000329139 EN Version: E Status: RL (released | freigegeben) printed: 23.07.2026

valvesgo.com

The position of the actuator is regulated according to the position set-point value. The position set-point value is specified by an external standard signal.

Pneumatically actuated piston actuators and rotary actuators can be used as an actuator. Single-acting actuators are offered in combination with the positioner.

For single-acting actuators, only one chamber is aerated and deaerated in the actuator. The generated pressure works against a spring. The piston moves until there is an equilibrium of forces between compressive force and spring force.

5.3 Features of the valve types

	Angle seat control valves / straight seat control valves	Diaphragm valves	Ball valves	Flap valves
Types	▪ 2300 ▪ 2301 ▪ 2702 ▪ 2712	▪ 2103 ▪ 2730 ▪ 2731	▪ 2652 ▪ 2655 ▪ 2658	▪ 2672 ▪ 2675
Features	▪ incoming flow under seat ▪ no closing impact ▪ straight flow path of the medium ▪ self-adjusting stuffing box for high leak-tightness	▪ medium is hermetically separated from the actuator and environment ▪ cavity-free and self-draining body design ▪ any flow direction with low-turbulence flow ▪ steam-sterilizable ▪ CIP-compliant ▪ no closing impact ▪ actuator and diaphragm can be removed when the body is installed	▪ scrapable ▪ minimum dead space ▪ unaffected by contamination ▪ little pressure loss compared to other valve types ▪ seat and seal can be exchanged in the three-piece ball valve when installed Note can be used as process controller only	▪ unaffected by contamination ▪ little pressure loss compared to other valve types ▪ inexpensive ▪ low construction volume
Typical media	▪ water, steam and gases ▪ alcohols, oils, propellants, hydraulic fluids ▪ salt solutions, lyes (organic) ▪ solvents	▪ neutral gases and liquids ▪ contaminated, abrasive and aggressive media ▪ media of higher viscosity	▪ neutral gases and liquids ▪ clean water ▪ slightly aggressive media	▪ neutral gases and liquids ▪ slightly aggressive media

Table 1: Features of the valve types

valvesgo.com

MAN 1000329139 EN Version: E Status: RL (released | freigegeben) printed: 23.07.2026

5.4 Structure of the positioner

The positioner Type 8694 consists of the micro-processor controlled electronics, the position measuring system and the control system. The device is designed using three-wire technology. The positioner is operated via 2 keys and a 4-pole DIP switch. The pneumatic control system for single-acting actuators consists of 2 solenoid valves.

5.4.1 Representation

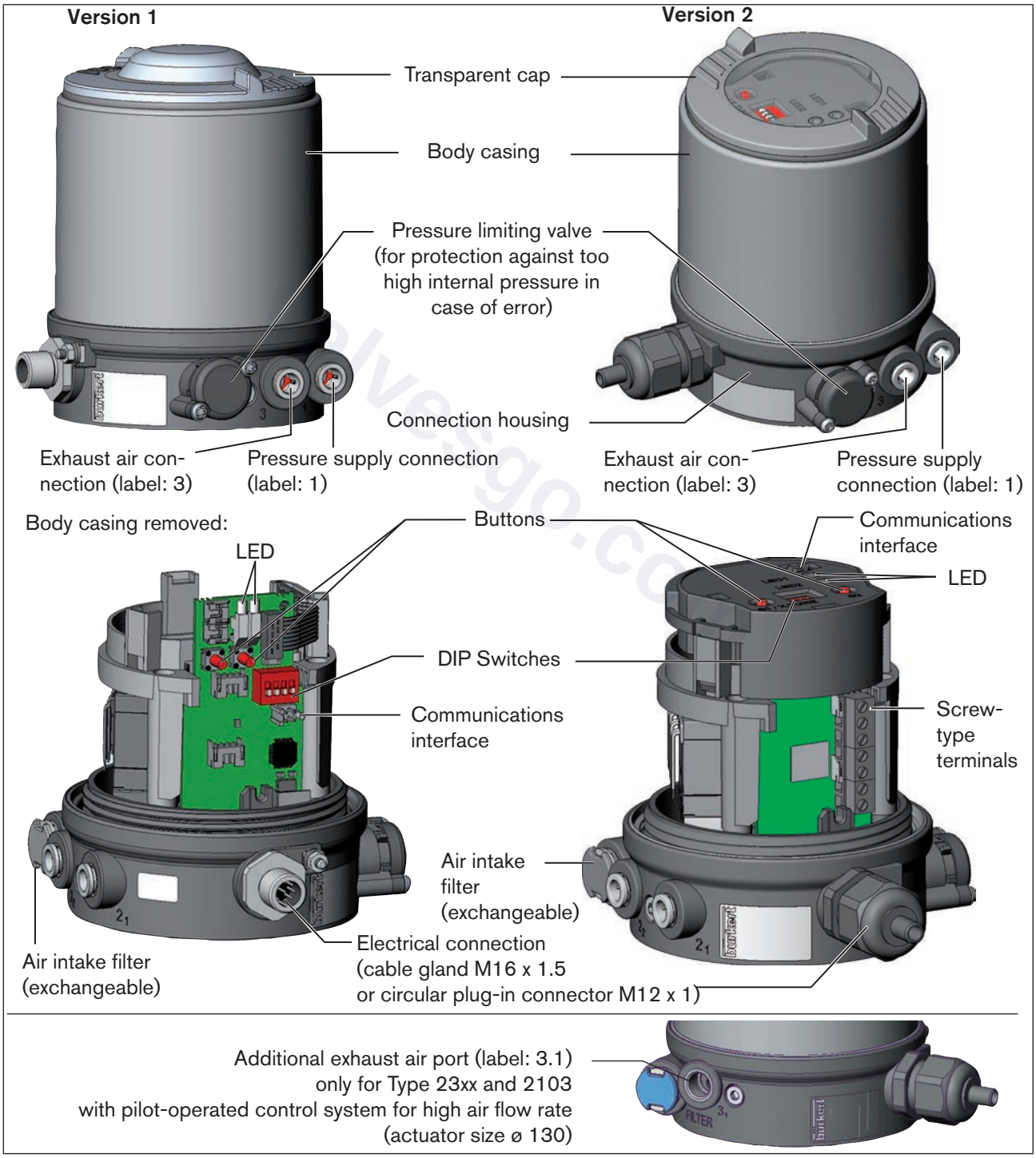

Figure 2: Structure

MAN 1000329139 EN Version: E Status: RL (released | freigegeben) printed: 23.07.2026

valvesgo.com

5.4.2 Features

- **Models**
  for single-acting valve actuators.
- **Position measuring system**
  Contactless and therefore wear-free position measuring system.
- **Microprocessor-controlled electronics**
  for signal processing, control and valve control.
- **Control module**
  The device is controlled via 2 buttons and a 4-pole DIP switch. 2x 2-colored LEDs indicate different statuses of the device.
- **Control system**
  The control system consists of 2 solenoid valves. One valve is used to aerate and another to deaerate the pneumatic actuator. The solenoid valves operate according to the rocker principle and are controlled with a PWM voltage via the controller. Doing so achieves a higher flexibility with regard to actuator volume and final control speed. The direct-action model has an orifice of DN 0.6. In larger pneumatic actuators the solenoid valves feature diaphragm amplifiers to increase the maximum flow and therefore to improve the dynamics (DN 2.5).
- **Position feedback (optional)**
  The position of the valve can be transmitted to the PLC via an analog 0/4-20 mA output.
- **Binary input**
  If a voltage > 10 V is applied, *SAFE POSITION* is activated, i.e. the valve is moved to the safety position (factory setting, can be changed with communications software).
  - **Pneumatic interfaces**
    1/4“ connections with different thread forms
    (G, NPT)
    hose plug-in connection
  - **Electrical interfaces**
    Circular plug-in connector or cable gland

- **Body**
  The body of the positioner is protected from excessively high internal pressure, e.g. due to leaks, by a pressure limiting valve.
- **Communications interface**
  For configuration and parameterization.

MAN 1000329139 EN Version: E Status: RL (released | freigegeben) printed: 23.07.2026

valvesgo.com

5.4.3 Function diagram of the positioner with single-acting actuator

The illustrated function diagram describes the function of the positioner (Type 8694).

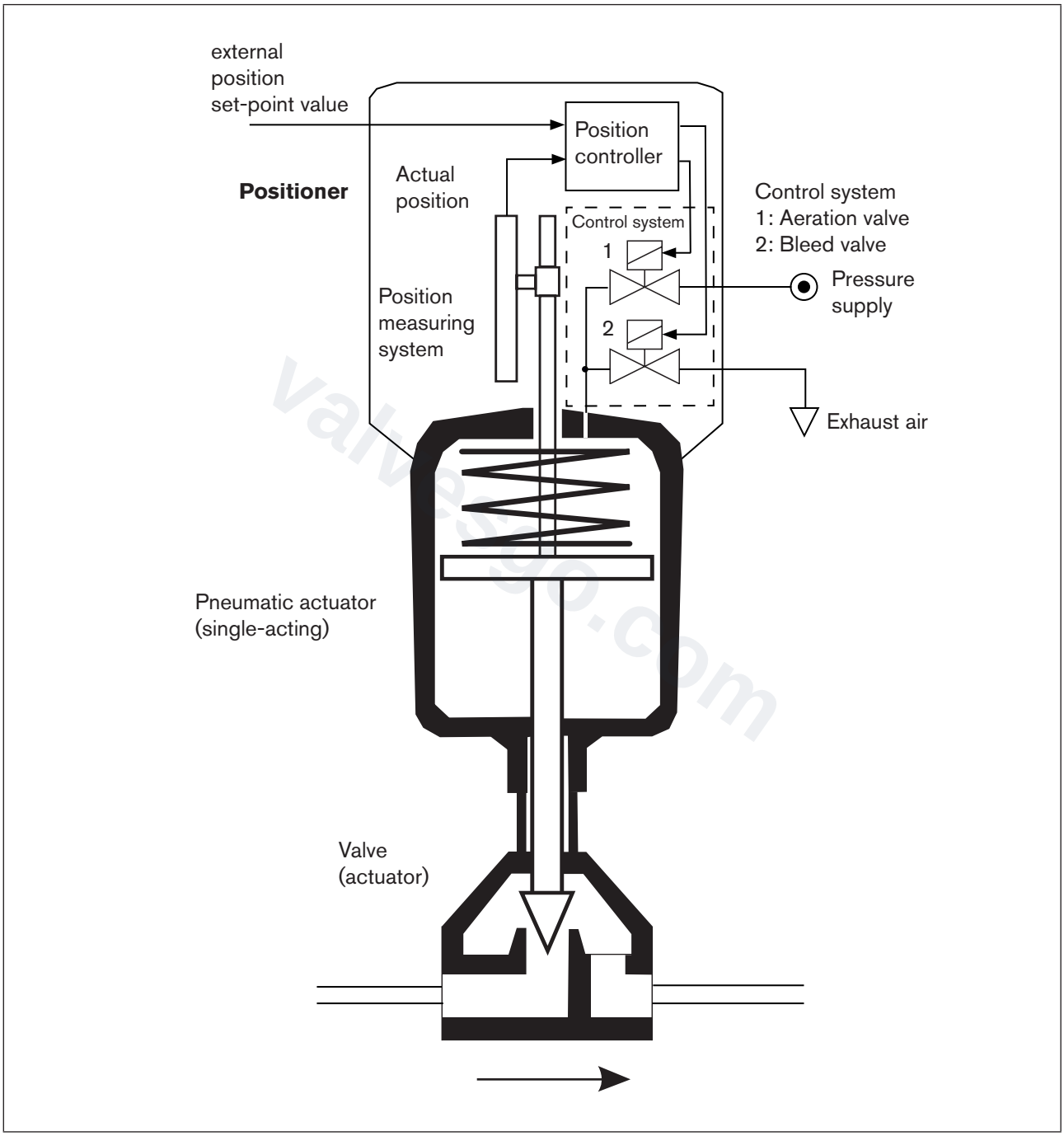

Figure 3: Function diagram

MAN 1000329139 EN Version: E Status: RL (released | freigegeben) printed: 23.07.2026

valvesgo.com

5.5 Type 8694 positioner (position controller)

The position measuring system records the current position (POS) of the pneumatic actuator. The position controller compares this actual position value with the set-point value (CMD) which is definable as standard signal. In case of a control deviation (Xd1), a pulse-width modulated voltage signal is sent to the control system as a manipulated variable. If there is a positive control difference in single-acting actuators, the air inlet valve is controlled via output B1. If the control difference is negative, the bleed valve is controlled via output E1. In this way the position of the actuator is changed until control difference is 0. Z1 represents a disturbance variable.

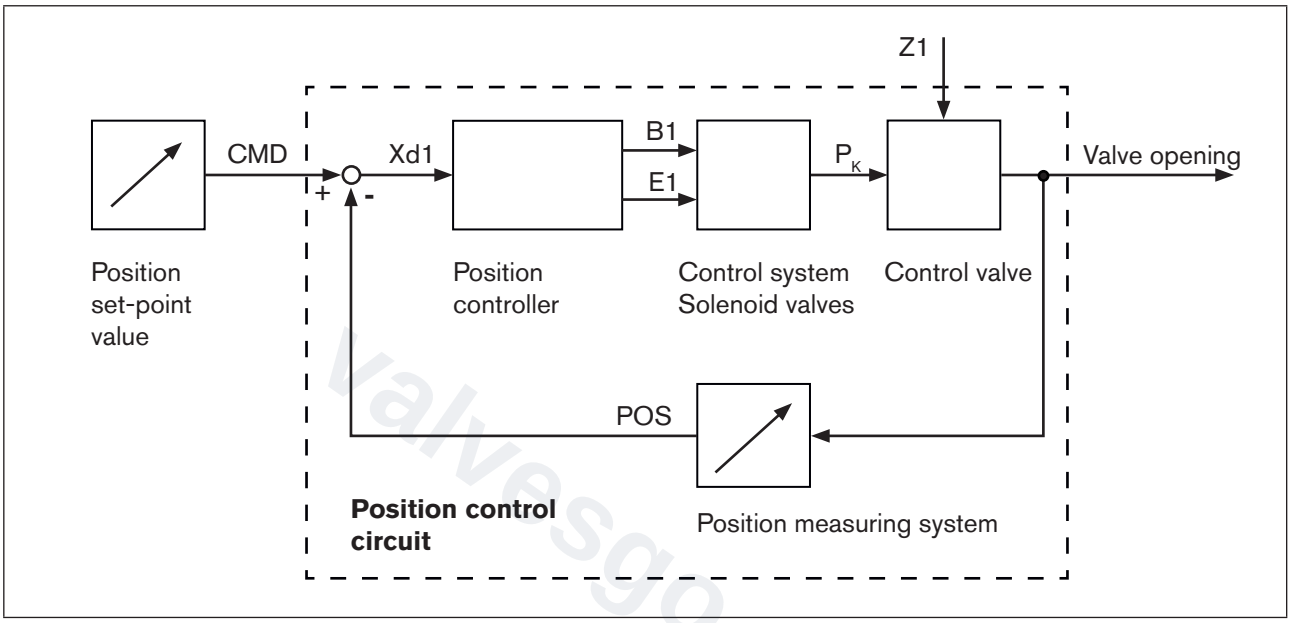

Figure 4: Signal flow plan of position controller

5.5.1 Schematic representation of the position control Type 8694

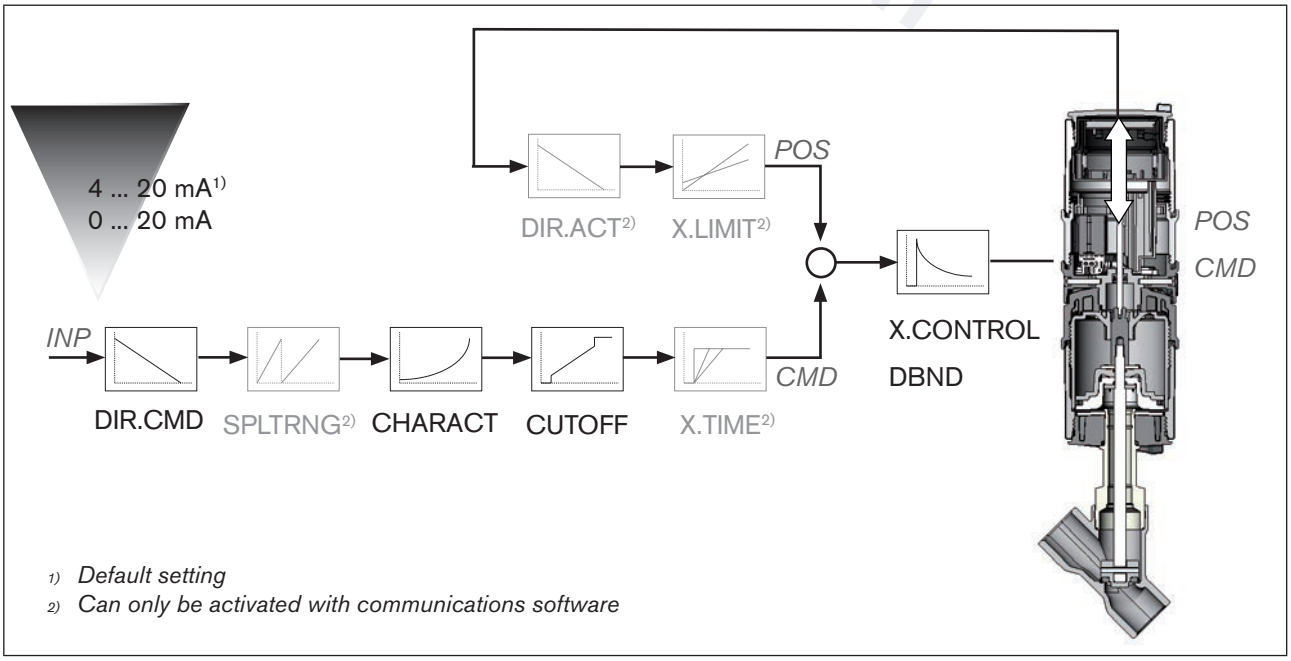

Figure 5: Schematic representation of position control

MAN 1000329139 EN Version: E Status: RL (released | freigegeben) printed: 23.07.2026

5.5.2 Functions of the position controller software

Functions I

- Activation via DIP switches
- Parameter setting via communications software

Additional function	Effect
Sealing function *CUTOFF*	Valve closes tight outside the control range. Specification of the value (as %), from which the actuator is completely deaerated (when 0 %) or aerated (when 100 %) (see chapter "7.4 Function of the DIP switches").
Correction line to adjust the operating characteristic *CHARACT*	Linearization of the operating characteristic can be implemented (see chapter "7.4 Function of the DIP switches").
Effective direction of the controller set-point value *DIR.CMD*	Reversal of the effective direction of the set-point value (see chapter "7.4 Function of the DIP switches").

Table 2: Functions I

valvesgo.com

MAN 1000329139 EN Version: E Status: RL (released | freigegeben) printed: 23.07.2026

Functions II

- Activation and parameter setting via communications software

Additional function	Effect
Standard signal for set-point value *INPUT*	Select set-point value standard signal
Effective direction of the actuator *DIR.ACTUATOR*	Assignment of the aeration status of the actuator chamber to the actual position.
Signal split range *SPLITRANGE*	Standard signal as % for which the valve runs through the entire mechanical stroke range.
Mechanical stroke range limit *X.LIMIT*	Limit the mechanical stroke range
Opening and closing time *X.TIME*	Limit the control speed
Position controller *X.CONTROL*	Parameterize the position controller
Safety position *SAFE POSITION*	Definition of the safety position
Signal level fault detection *SIGNAL ERROR*	Configuration of signal level fault detection
Binary input *BINARY INPUT*	Configuration of the binary input
Analog output *OUTPUT*	Configuration of the analog output (optional)
Reset *RESET*	Reset to factory settings

Table 3: Functions II

MAN 1000329139 EN Version: E Status: RL (released | freigegeben) printed: 23.07.2026

valvesgo.com

5.6 Interfaces of the positioner

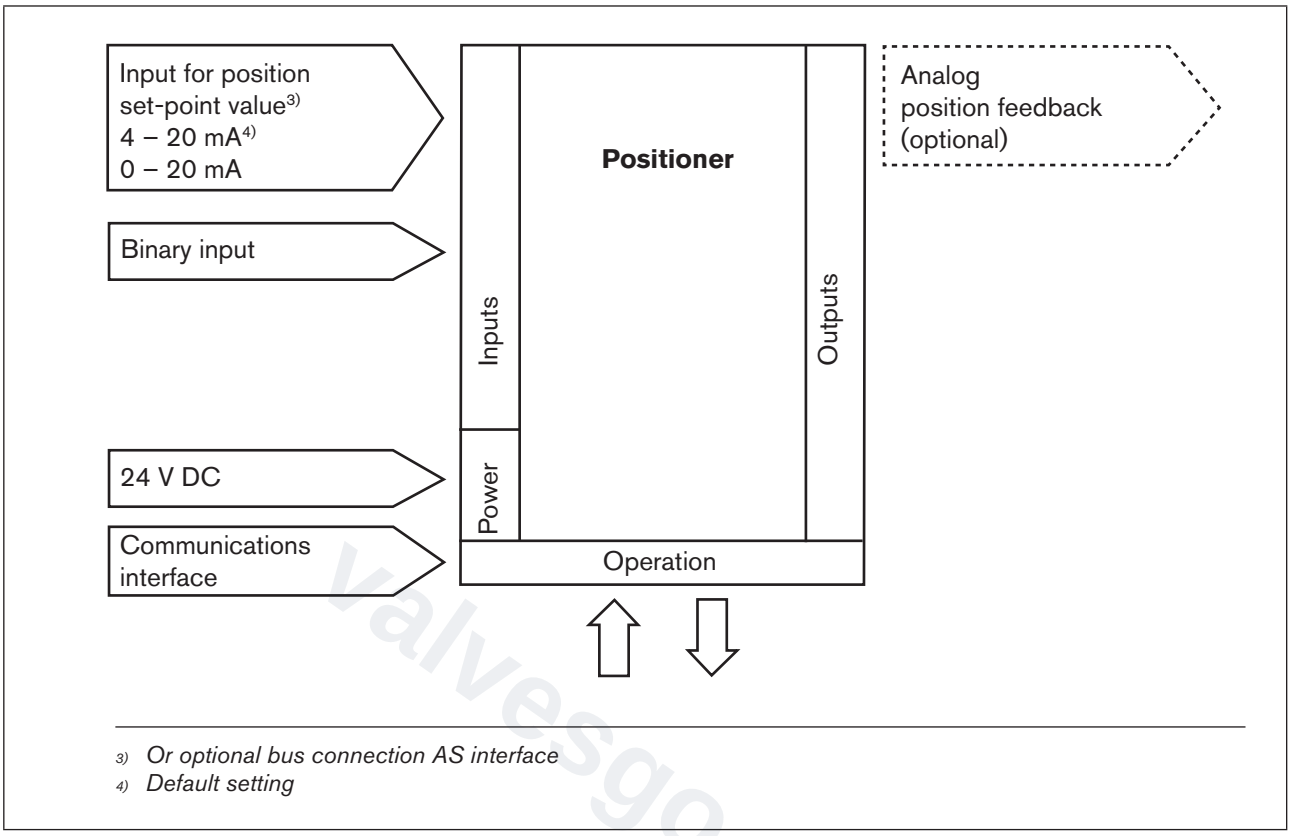

Figure 6: Interfaces

The positioner Type 8694 is a 3-wire device, i.e. the power (24 V DC) is supplied separately from the set-point value signal.

- Input for position set-point value (4 – 20 mA corresponds to 0 – 100 % (depending on position of DIP switch 1)).
- Binary input
  If a voltage > 10 V is applied, *SAFE POSITION* is activated, i.e. the valve is moved to the safety position (factory setting, can be changed with communications software).
- Analog position feedback (optional)
  The position of the valve can be transmitted via an analog 4 – 20 mA output to the PLC (4 – 20 mA corresponds to 0 – 100 %).

MAN 1000329139 EN Version: E Status: RL (released | freigegeben) printed: 23.07.2026

valvesgo.com

6 TECHNICAL DATA

6.1 Conformity

In accordance with the EU Declaration of conformity, the positioner Type 8694 is compliant with the EU Directives.

6.2 Standards

The applied standards on the basis of which compliance with the EU Directives is confirmed are listed in the EU type examination certificate and/or the EU Declaration of Conformity.

6.3 Licenses

The product is approved for use in zone 2 and 22 in accordance with ATEX directive 2014/34/EU category 3GD.

Observe instructions on operation in a potentially explosive atmosphere.
Observe the ATEX additional instructions.

The product is cULus approved. Instructions for use in the UL area see chapter “6.8 Electrical data”.

6.4 Operating conditions

WARNING!

Solar radiation and temperature fluctuations may cause malfunctions or leaks.

- If the device is used outdoors, do not expose it unprotected to the weather conditions.
- Ensure that the permitted ambient temperature does not exceed the maximum value or drop below the minimum value.

Ambient temperature: see type label

Degree of protection

Evaluated by the manufacturer:	Evaluated by UL:
IP65 / IP67 according to EN 60529 *	UL Type 4x Rating, indoor only *

Operating altitude: up to 2000 m above sea level

Relative air humidity: max. 90% at 60 °C (non condensing)

* Only if cables, plugs and sockets have been connected correctly and in compliance with the exhaust air concept see chapter “9 Pneumatic installation”.

MAN 1000329139 EN Version: E Status: RL (released | freigegeben) printed: 23.07.2026

valvesgo.com

6.5 Mechanical data

Dimensions	See data sheet
Body material	exterior: PPS, PC, VA, interior: PA 6; ABS
Sealing material	EPDM / (NBR)
Stroke range of valve spindle:	2 – 45 mm

6.6 Pneumatic data

Control medium		neutral gases, air Quality classes in accordance with ISO 8573-1
Dust content	Quality class 7	max. particle size 40 µm, max. particle density 10 mg/m³
Water content	Quality class 3	max. pressure dew point - 20 °C or min. 10 °C below the lowest operating temperature
Oil content	Quality class X	max. 25 mg/m³
Temperature range of the control medium		-10 – +50 °C
Pressure range of the control medium		3 – 7 bar
Air output of pilot valve		7 l_N / min (for aeration and deaeration) (Q_{Nn} - value according to definition for pressure drop from 7 to 6 bar absolute) optional: 130 l_N / min (for aeration and deaeration) (only single-acting)
Connections		Plug-in hose connector Ø6 mm / 1/4" Socket connection G1/8

6.7 Type labels

6.7.1 Type label standard

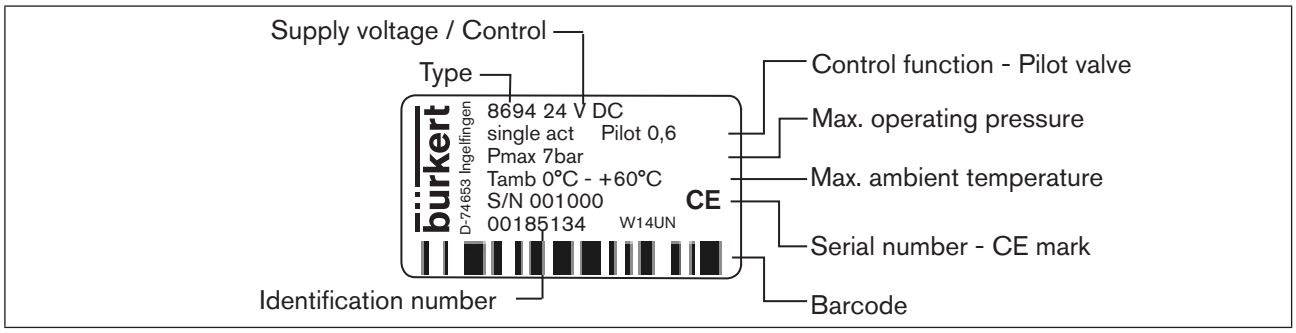

Figure 7: Example of type label

MAN 1000329139 EN Version: E Status: RL (released | freigegeben) printed: 23.07.2026

valvesgo.com

6.7.2 UL type label

Example:

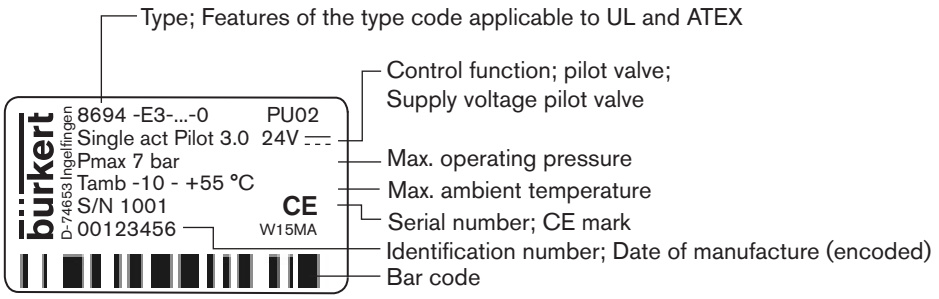

Figure 8: UL type label (example)

6.7.3 UL additional label

Example:

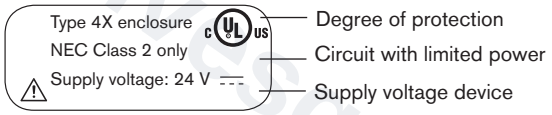

Figure 9: UL additional label (example)

6.8 Electrical data

WARNING!

Only circuits with limited power may be used for UL approved components according to “NEC Class 2”.

6.8.1 Electrical data without bus control 24 V DC

Protection class	3 as per DIN EN 61140 (VDE 0140-1)
Connections	Cable gland M16 x 1.5, wrench size 22 (clamping area 5 – 10 mm) with screw-type terminals for cable cross-sections 0.14 – 1.5 mm²
	Circular plug-in connector (M12 x 1, 8-pole)
Control valve	
Operating voltage	24 V DC ± 10% - max. residual ripple 10 %
Power input	≤ 3.5 W
Input resistance for set-point value signal	75 Ω at 0/4 - 20 mA / 12 bit resolution

MAN 1000329139 EN Version: E Status: RL (released | freigegeben) printed: 23.07.2026

valvesgo.com

Analogue position feedback max. load for current output 0/4 – 20 mA	560 Ω
Binary input	0 – 5 V = log “0”, 12 - 30 V = log “1” inverted input in reverse order
Communications interface	Direct connection to PC via USB adapter with integrated interface driver, communication with communications software, see “Table 34: Accessories”.

6.8.2 Electrical data with AS-Interface bus control

Protection class	3 as per DIN EN 61140 (VDE 0140-1)
Connections	Circular plug-in connector (M12 x 1, 4-pole)
Electrical supply voltage	29.5 V – 31.6 V DC (according to specification)

Devices without external supply voltage:

Max. power consumption	150 mA

Devices with external supply voltage:

External supply voltage The power supply unit must include a secure disconnection in accordance with IEC 364-4-41 (PELV or SELV)	24 V ± 10 %
Max. power consumption	100 mA
Max. power consumption from AS-Interface	50 mA

MAN 1000329139 EN Version: E Status: RL (released | freigegeben) printed: 23.07.2026

valvesgo.com

6.9 Factory settings of the positioner

Functions can be activated via DIP switches:

Function	Parameter	Value
CUTOFF	Sealing function below Sealing function above	2 % 98 %
CHARACT	Select characteristic	FREE[5)]
DIR.CMD	Effective direction set-point value	rise

Table 4: Factory settings - Functions I

Functions can be activated via communications software:

Function	Parameter	Value
INPUT	Set-point value input	4 ... 20 mA
DIR.ACTUATOR	Effective direction actual value	rise
SPLITRANGE Function deactivated	Signal split range below Signal split range above	0 % 100 %
X.LIMIT Function deactivated	Stroke limit below Stroke limit above	0 % 100 %
X.TIME Function deactivated	Actuating time Open Actuating time Closed	(1 s) values determined by *X.TUNE* (1 s) values determined by *X.TUNE* After implementation of *RESET*: 1 s
X.CONTROL	Deadband Open amplification factor Close amplification factor	1,0 % (1) values determined by *X.TUNE* (1) values determined by *X.TUNE* After implementation of *RESET*: 1
SAFE POSITION	Safety position	0 %
SIGNAL ERROR Function deactivated	Sensor break detection set-point value	OFF
BINARY INPUT	Binary input function Operating principle of binary input	Safety position Normally open
OUTPUT (optional)	Norm signal output: Parameter Norm signal output: Type	Position 4 – 20 mA

Table 5: Factory settings Functions II

5) *Without change to the settings via the communications software a linear characteristic is stored in FREE.*

MAN 1000329139 EN Version: E Status: RL (released | freigegeben) printed: 23.07.2026

valvesgo.com

7 CONTROL AND DISPLAY ELEMENTS

The following chapter describes the operating statuses as well as the control and display elements of the positioner.

Further information on the operation of the positioner can be found in the chapter entitled “12 Start-up”.

7.1 Operating status

AUTOMATIC (AUTO)

Normal controller mode is implemented and monitored in AUTOMATIC operating status.

→ LED 1 flashes green.

MANUAL

In MANUAL operating status the valve can be opened and closed manually via the keys.

→ LED 1 flashes red / green alternately.

DIP switch 4 can be used to switch between the two operating statuses AUTOMATIC and MANUAL.

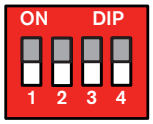

7.2 Control and display elements of the positioner

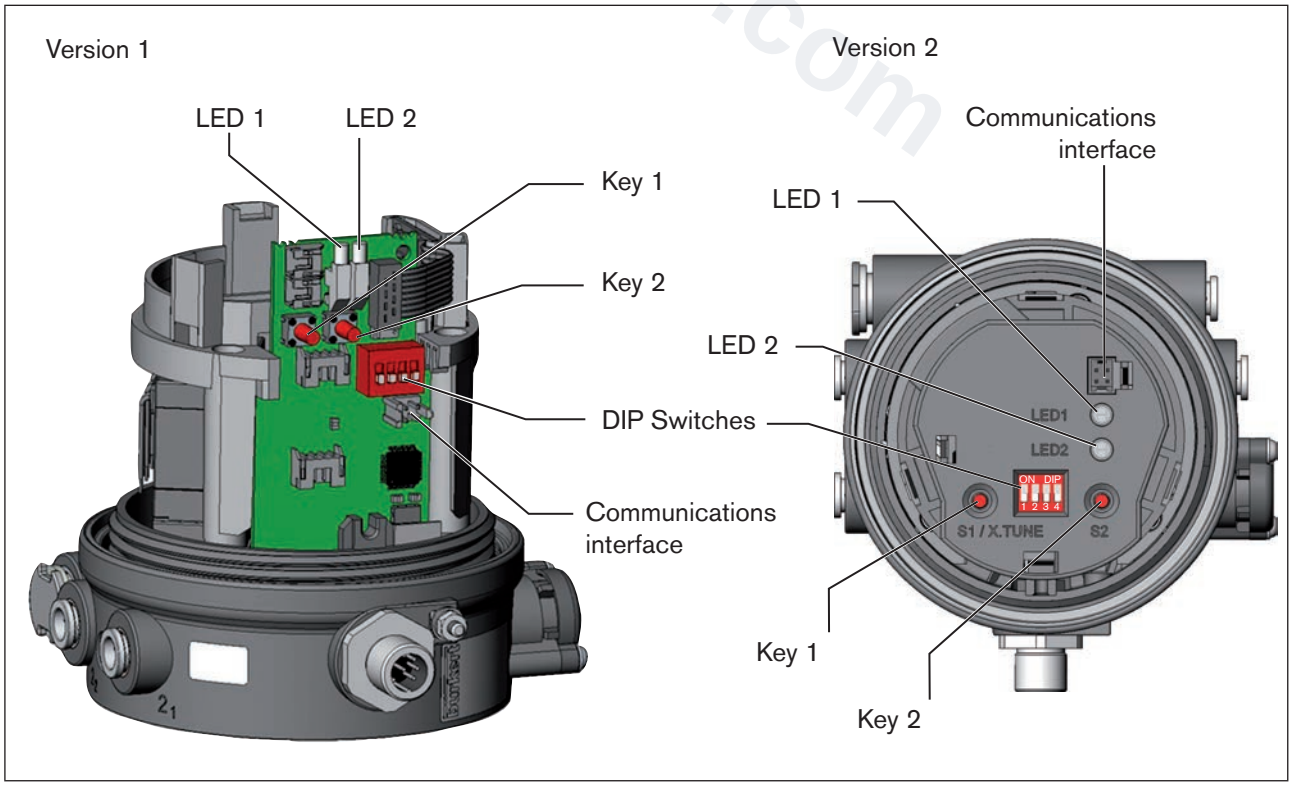

Figure 10: Description of control elements

MAN 1000329139 EN Version: E Status: RL (released | freigegeben) printed: 23.07.2026

valvesgo.com

The positioner features 2 buttons, 4-pole DIP switches and 2x 2-colored LEDs as a display element.

NOTE!

Breakage of the pneumatic connection pieces due to rotational impact.

- When unscrewing and screwing in the body casing or transparent cap, do not hold the actuator of the process valve but the connection housing.

→ To operate the buttons and DIP switches, for
Version 1: unscrew the body casing
Version 2: unscrew the transparent cap

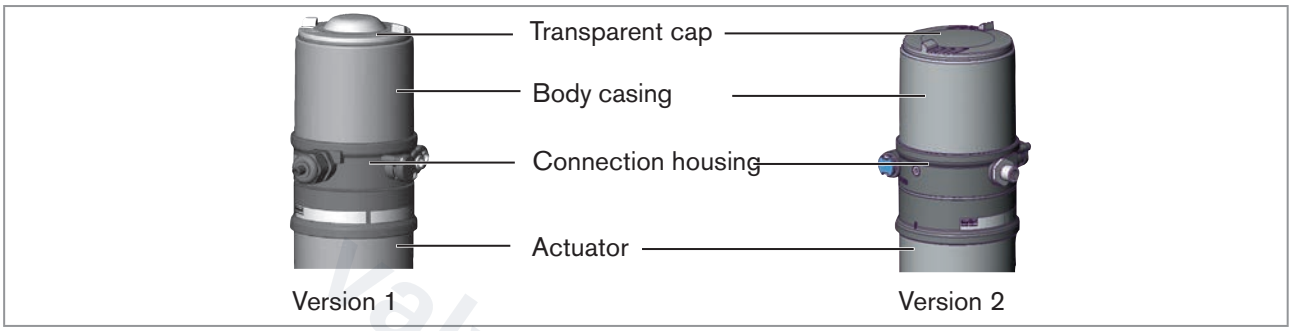

Figure 11: Open positioner

Figure 12: Position of the seal in the body casing

→ Version 1:
Check that the seal is correctly positioned in the body casing.

NOTE!

Damage or malfunction due to penetration of dirt and humidity.

- To observe degree of protection IP65 / IP67, screw the transparent cap in all the way.

→ Close the device (assembly tool: 674077[6]).

6) *The assembly tool (674077) is available from your Bürkert sales office.*

MAN 1000329139 EN Version: E Status: RL (released | freigegeben) printed: 23.07.2026

valvesgo.com

7.3 Configuration of the keys

The configuration of the 2 keys varies depending on the operating status (AUTOMATIC / MANUAL).

The description of the operating statuses (AUTOMATIC / MANUAL) can be found in the chapter entitled "7.1 Operating status".

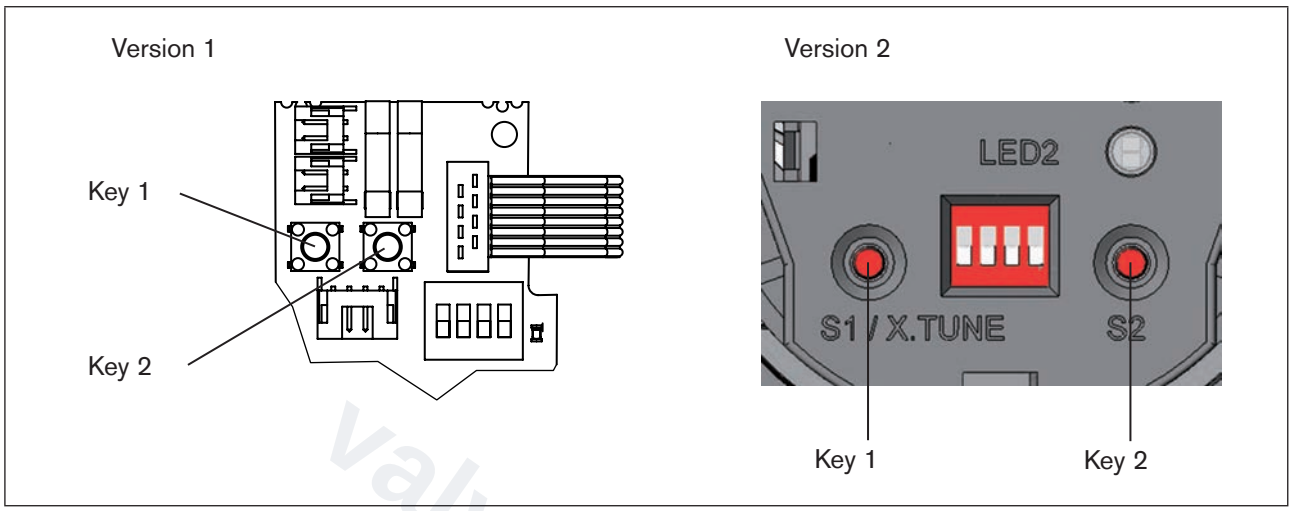

Figure 13: Description of the buttons

NOTE!

Breakage of the pneumatic connection pieces due to rotational impact.

- When unscrewing and screwing in the body casing or transparent cap, do not hold the actuator of the process valve but the connection housing.

→ To operate the buttons, for
Version 1: unscrew the body casing
Version 2: unscrew the transparent cap

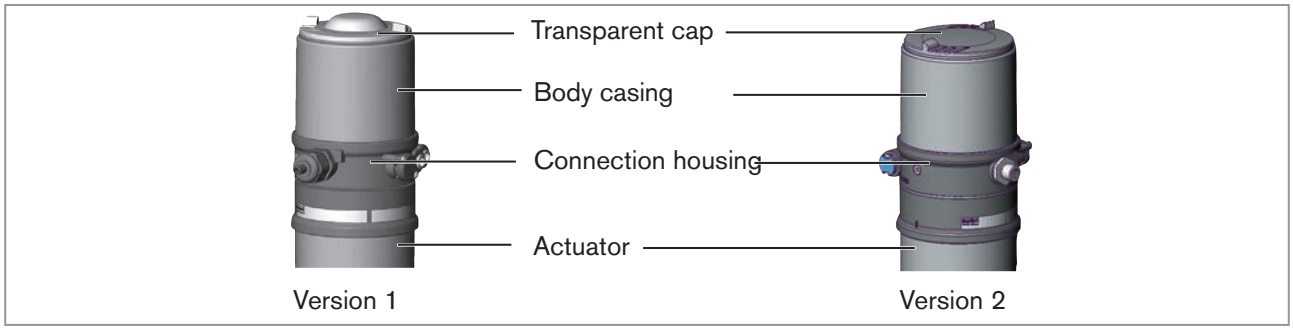

Figure 14: Open positioner

MAN 1000329139 EN Version: E Status: RL (released | freigegeben) printed: 23.07.2026

valvesgo.com

MANUAL operating status (DIP switch 4 set to ON):

Key	Function
1	Aerate[7] (manually open / close the actuator)[8]
2	Deaerate[7] (manually open / close the actuator)[8]

Table 6: Configuration of the keys for MANUAL operating status

AUTOMATIC operating status (DIP switch 4 set to OFF):

Key	Function
1	Press for 5 seconds to start the *X.TUNE* function
2	-

Table 7: Configuration of the keys for AUTOMATIC operating status

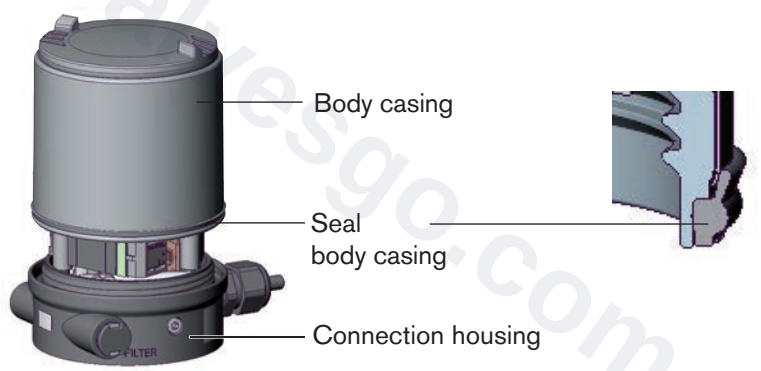

Figure 15: Position of the seal in the body casing

→ Version 1:
Check that the seal is correctly positioned in the body casing.

NOTE!

Breakage of the pneumatic connection pieces due to rotational impact.

- When unscrewing and screwing in the body casing or transparent cap, do not hold the actuator of the process valve but the connection housing.

Damage or malfunction due to penetration of dirt and humidity.

- To observe degree of protection IP65 / IP67, screw the transparent cap in all the way.

→ Close the device (assembly tool: 674077[9]).

7) *No function if the binary input was activated with the "Manual/Auto change-over" via the communications software*
8) *Depending on the operating principle of the actuator.*
9) *The assembly tool (674077) is available from your Bürkert sales office.*

MAN 1000329139 EN Version: E Status: RL (released | freigegeben) printed: 23.07.2026

valvesgo.com

7.4 Function of the DIP switches

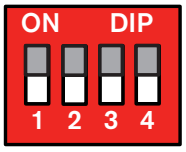

NOTE!

Breakage of the pneumatic connection pieces due to rotational impact.

- When unscrewing and screwing in the body casing or transparent cap, do not hold the actuator of the process valve but the connection housing.

→ To operate the DIP switches, for
Version 1: unscrew the body casing
Version 2: unscrew the transparent cap

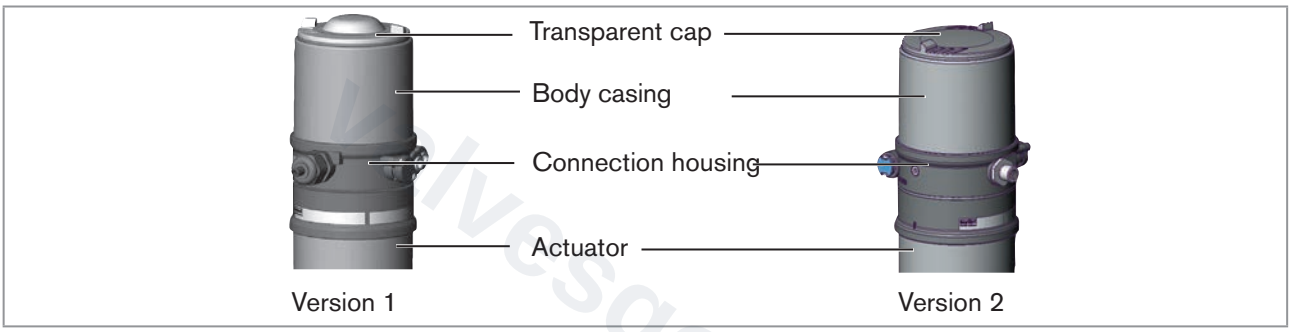

Figure 16: Open positioner

DIP Switches	Position	Function
1	ON	Reversal of the effective direction of the set-point value (*DIR.CMD*) (set-point value 20 – 4 mA corresponds to position 0 – 100 %), descending
	OFF	Normal effective direction of the set-point value (set-point value 4 – 20 mA corresponds to position 0 – 100 %), ascending
2	ON	Sealing function active. The valve completely closes below 2 %[10] and opens above 98 % of the set-point value (*CUTOFF*)
	OFF	No sealing function
3	ON	Correction characteristic for adjustment of the operating characteristic (linearization of the process characteristic *CHARACT*) [11]
	OFF	Linear characteristic
4	ON	Operating status MANUAL (BY HAND)
	OFF	Operating status AUTOMATIC (AUTO)

Table 8: DIP Switches

10) Factory setting, can be changed via communications software.
11) The characteristic type can be changed via communications software.

MAN 1000329139 EN Version: E Status: RL (released | freigegeben) printed: 23.07.2026

valvesgo.com

Information about the communications software:

The switching position of the DIP switch has priority over the settings via the communications software.

If the values of the sealing function (*CUTOFF*) or the correction characteristic (*CHARACT*) are changed via the communications software, the corresponding function must be active (DIP switches set to ON). The effective direction of the set-point value (*DIR.CMD*) can be changed via the DIP switches **only**. If the correction characteristic (*CHARACT*) is not changed via the communications software, a linear characteristic is saved when DIP switch 3 is set to ON.

A detailed description of the functions can be found in the chapter entitled "Basic functions".

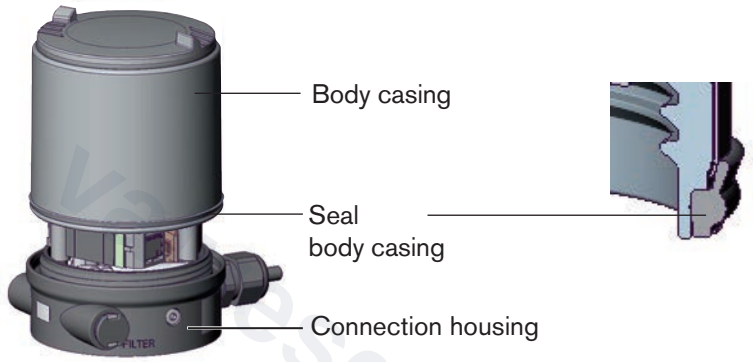

Figure 17: Position of the seal in the body casing

→ Version 1:
Check that the seal is correctly positioned in the body casing.

NOTE!

Breakage of the pneumatic connection pieces due to rotational impact.

- When unscrewing and screwing in the body casing or transparent cap, do not hold the actuator of the process valve but the connection housing.

Damage or malfunction due to penetration of dirt and humidity.

- To observe degree of protection IP65 / IP67, screw the transparent cap in all the way.

→ Close the device (assembly tool: 674077[12]).

[12] *The assembly tool (674077) is available from your Bürkert sales office.*

MAN 1000329139 EN Version: E Status: RL (released | freigegeben) printed: 23.07.2026

valvesgo.com

7.5 Display of the LEDs

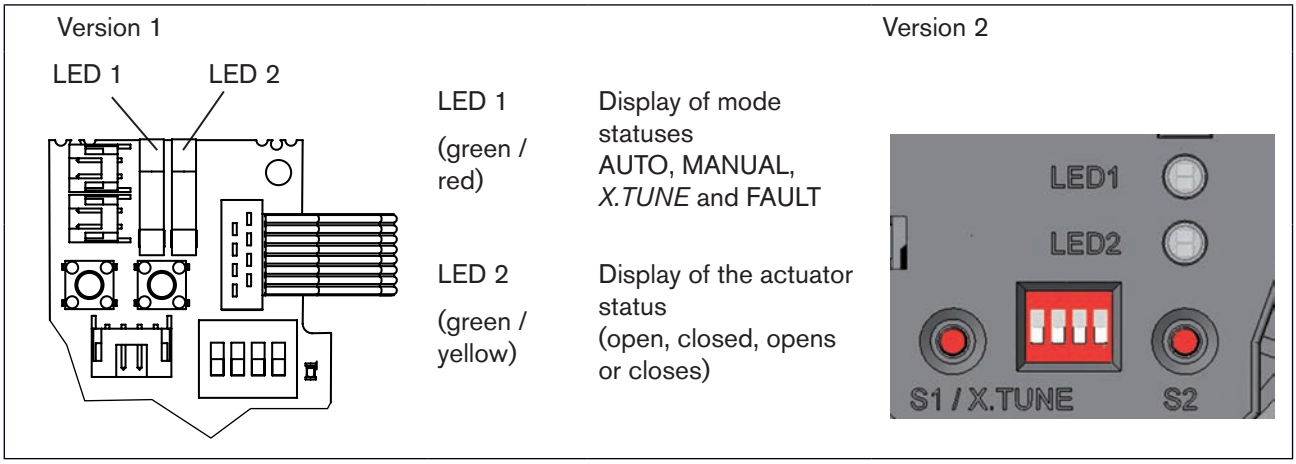

Figure 18: LED display

LED 1 (green / red)

LED statuses		Display
green	red	
on	off	Acceleration phase when Power ON
flashes slowly	off	Operating status AUTO (AUTOMATIC)
flashing alternating	flashing alternating	MANUAL operating status
flashes quickly	off	*X.TUNE* function
off	on	ERROR (see chapter entitled “7.6 Error messages”)
off	flashes slowly	AUTO operating status for sensor break detection

Table 9: Display LED 1

LED 2 (green / yellow)

LED statuses		Display
green	yellow	
on	off	Actuator closed
off	on	Actuator open
flashes slowly	off	remaining control deviation (actual value > set-point value)
off	flashes slowly	remaining control deviation (actual value < set-point value)
flashes quickly	off	Closing in MANUAL operating status
off	flashes quickly	Opening in MANUAL operating status

Table 10: Display LED 2

MAN 1000329139 EN Version: E Status: RL (released | freigegeben) printed: 23.07.2026

valvesgo.com

7.6 Error messages

7.6.1 Error messages in MANUAL and AUTOMATIC operating statuses

Display	Cause of fault	Remedial action
LED 1 (red) on	Checksum error in data memory → Data memory defective → The device automatically switches to an older (possibly not current) data record.	Not possible, device defective

Table 11: Error messages in the operating statuses

7.6.2 Error messages while the *X.TUNE* function is running

Display	Cause of fault	Remedial action
LED 1 (red) on	No compressed air connected	Connect compressed air
	Compressed air failure while the *X.TUNE* function was running	Check compressed air supply
	Actuator or control system deaeration side leaking	Not possible, device defective
	Control system aeration side leaking	Not possible, device defective

Table 12: Error messages for the X.TUNE function

valvesgo.com

MAN 1000329139 EN Version: E Status: RL (released | freigegeben) printed: 23.07.2026

8 INSTALLATION

8.1 Safety instructions

DANGER!

Risk of injury from high pressure in the equipment/device.

- Before working on equipment or device, switch off the pressure and deaerate/drain lines.

Risk of electric shock.

- Before working on equipment or device, switch off the power supply and secure to prevent reactivation.
- Observe applicable accident prevention and safety regulations for electrical equipment.

WARNING!

Risk of injury from improper installation.

- Installation may be carried out by authorized technicians only and with the appropriate tools.

Risk of injury from unintentional activation of the system and an uncontrolled restart.

- Secure system from unintentional activation.
- Following assembly, ensure a controlled restart.

8.2 Installation of the positioner Type 8694 on process valves of series 2103, 2300 and 2301

NOTE!

When mounting on process valves with a welded body, follow the installation instructions in the operating instructions for the process valve.

Procedure:

1. Install switch spindle

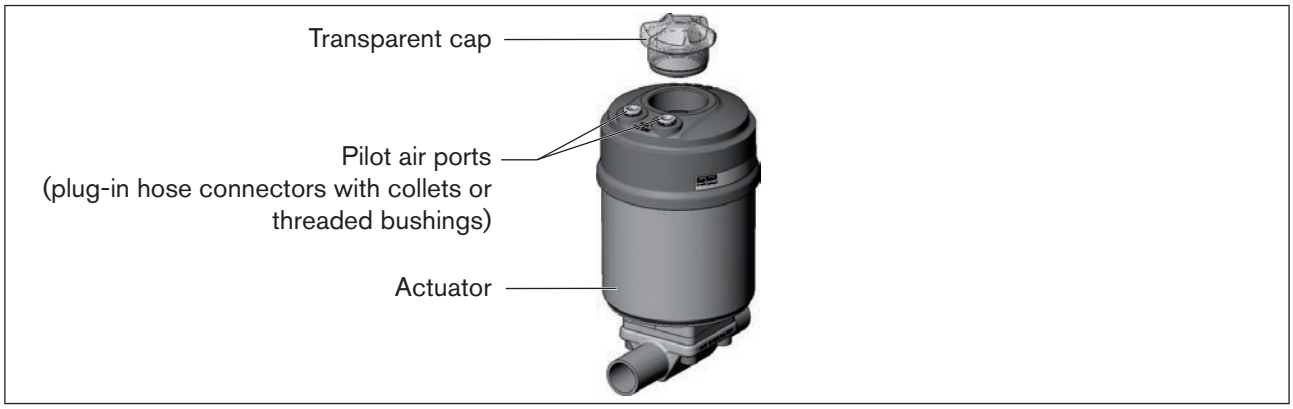

Figure 19: Installation of the switch spindle (1), series 2103, 2300 and 2301

→ Unscrew the transparent cap on the actuator and unscrew the position display (yellow cap) on the spindle extension (if present).

MAN 1000329139 EN Version: E Status: RL (released | freigegeben) printed: 23.07.2026

valvesgo.com

→ For version with plug-in hose connector, remove the collets (white nozzles) from both pilot air ports (if present).

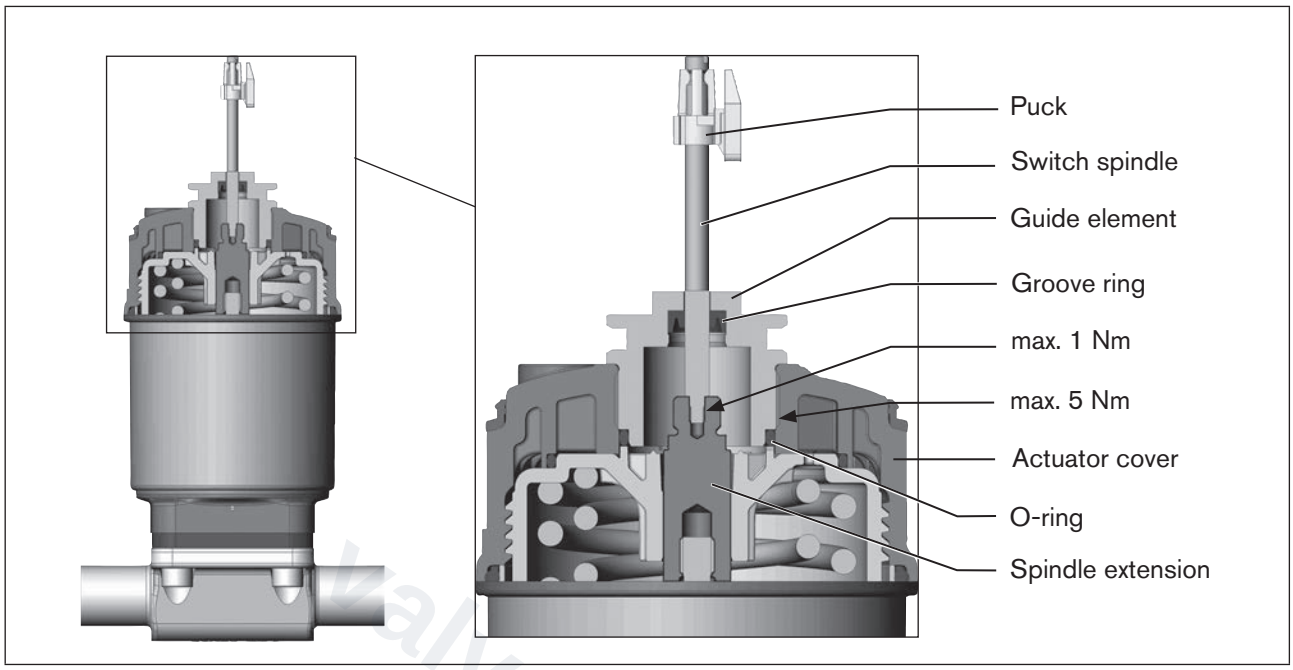

Figure 20: Installation of the switch spindle (2), series 2103, 2300 and 2301

NOTE!

Improper installation may damage the groove ring in the guide element.

The groove ring is already be pre-assembled in the guide element and must be “locked into position” in the undercut.

▸ When installing the switch spindle, do not damage the groove ring.

→ Push the switch spindle through the guide element.

NOTE!

Screw locking paint may contaminate the groove ring.

▸ Do not apply any screw locking paint to the switch spindle.

→ To secure the switch spindle, apply some screw locking paint (Loctite 290) in the tapped bore of the spindle extension in the actuator.

→ Check that the O-ring is correctly positioned.

→ Screw the guide element to the actuator cover (maximum torque: 5 Nm).

→ Screw switch spindle onto the spindle extension. To do this, there is a slot on the upper side (maximum torque: 1 Nm).

→ Push puck onto the switch spindle and lock into position.

MAN 1000329139 EN Version: E Status: RL (released | freigegeben) printed: 23.07.2026

valvesgo.com

MAN 1000329139 EN Version: E Status: RL (released | freigegeben) printed: 23.07.2026

2. Install sealing rings

→ Pull the form seal onto the actuator cover (smaller diameter points upwards).

→ Check that the O-rings are correctly positioned in the pilot air ports.

When the positioner is being installed, the collets of the pilot air ports must not be fitted to the actuator.

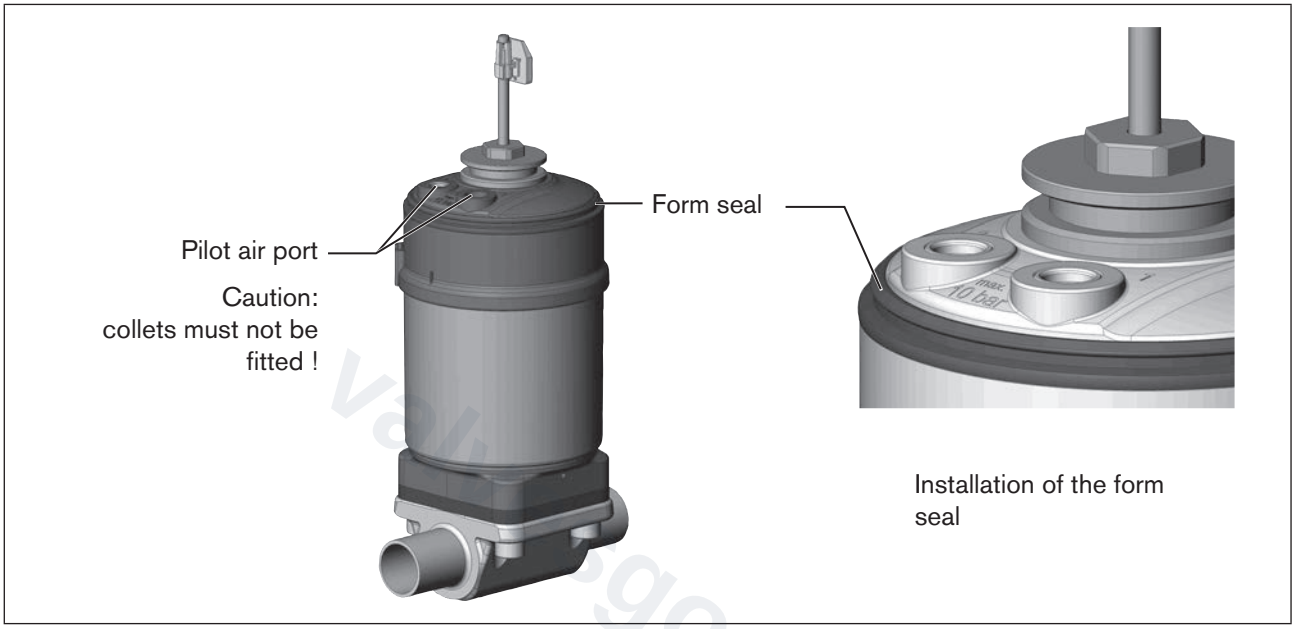

Figure 21: Installation of the sealing rings, series 2103, 2300 and 2301

3. Install positioner

→ Align the puck and the positioner until
1. the puck can be inserted into the guide rail of the positioner (see "Figure 22")
and
2. the connection pieces of the positioner can be inserted into the pilot air ports of the actuator (see also "Figure 23").

NOTE!

Damaged printed circuit board or malfunction.

▸ Ensure that the puck is situated flat on the guide rail.

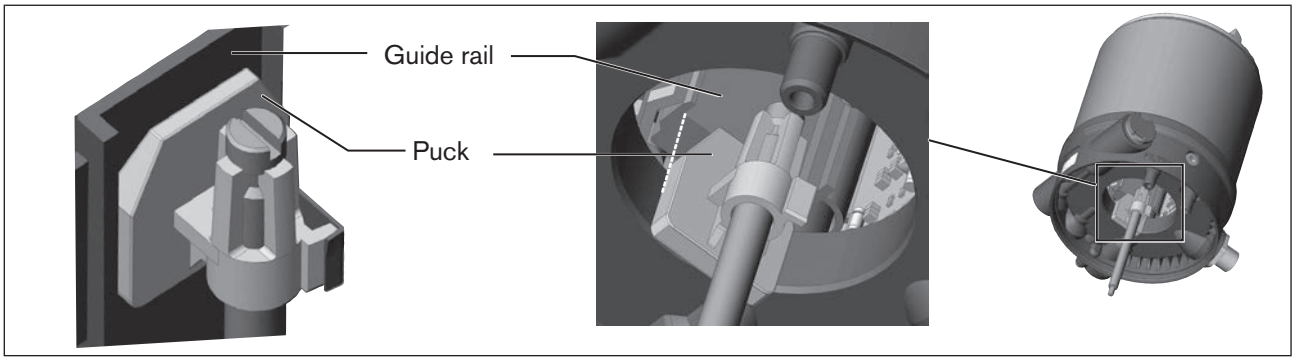

Figure 22: Aligning the puck

valvesgo.com

→ Push the positioner, without turning it, onto the actuator until no gap is visible on the form seal.

NOTE!

Too high torque when screwing in the fastening screw does not ensure degree of protection IP65 / IP67.

▸ The fastening screws may be tightened to a maximum torque of 1.5 Nm only.

→ Attach the positioner to the actuator using the two side fastening screws. In doing so, tighten the screws only hand-tight (max. torque: 1.5 Nm).

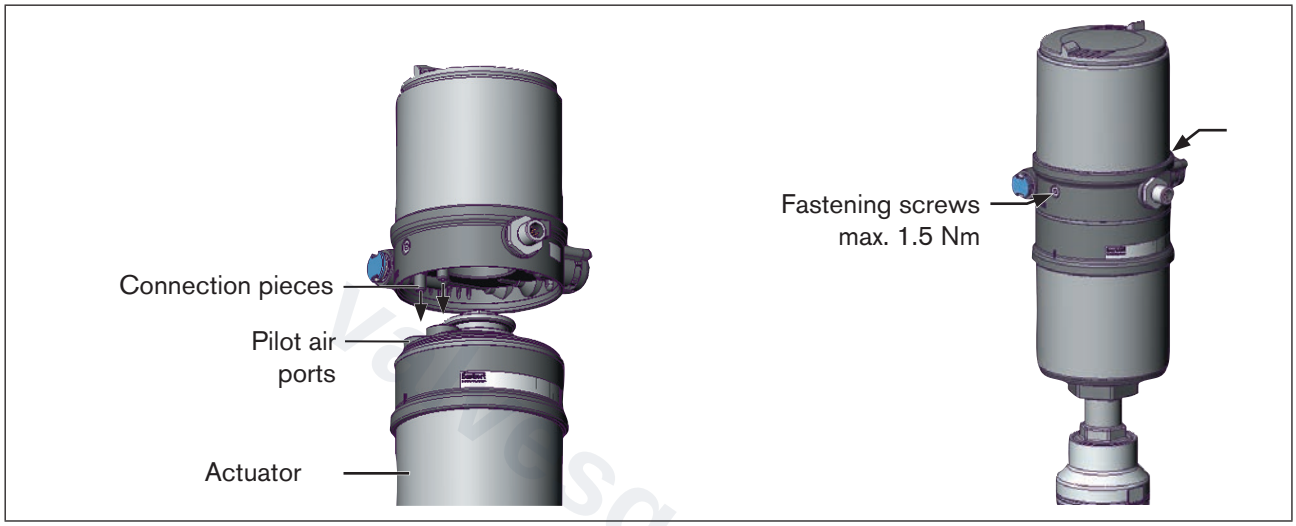

Figure 23: Installation of positioner, series 2103, 2300 and 2301

8.3 Installing the positioner Type 8694 on process valves belonging to series 26xx and 27xx

Procedure:

1. Install switch spindle

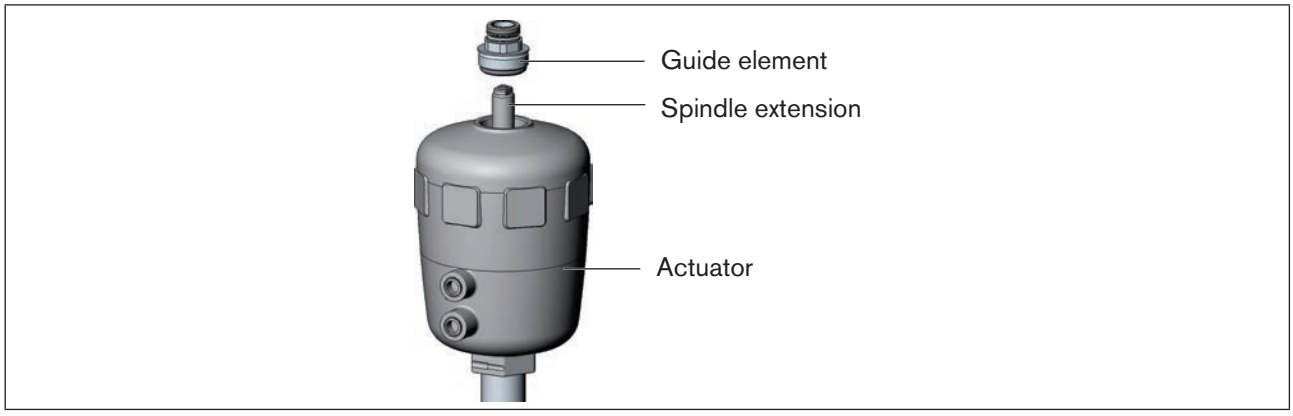

Figure 24: Installing the switch spindle (1), series 26xx and 27xx

→ Unscrew the already fitted guide element from the actuator (if present).

→ Remove intermediate ring (if present).

MAN 1000329139 EN Version: E Status: RL (released | freigegeben) printed: 23.07.2026

valvesgo.com

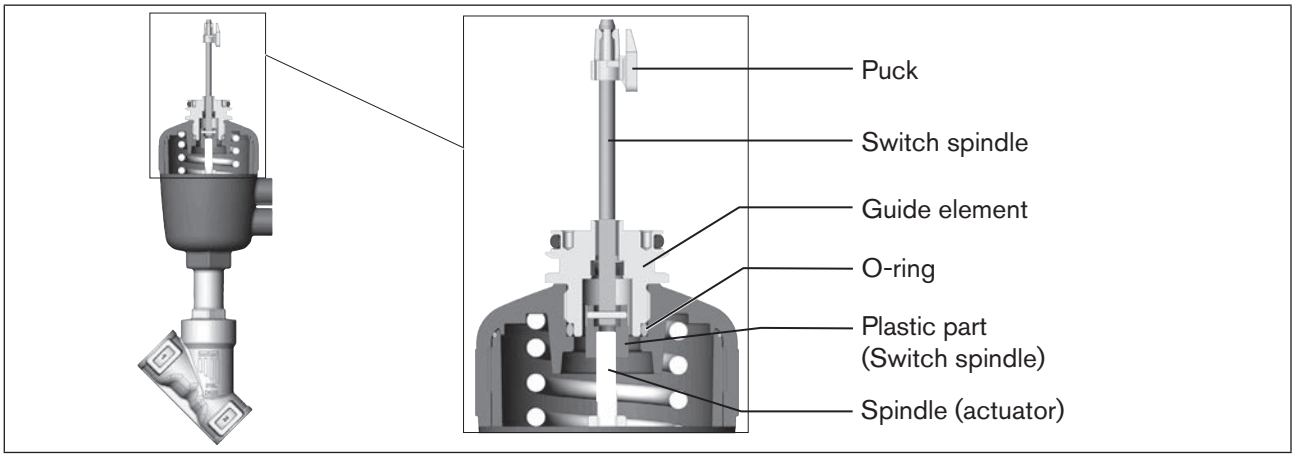

Figure 25: Installing the switch spindle (2), series 26xx and 27xx

→ Press the O-ring downwards into the cover of the actuator.

→ Actuator size 125 and bigger with high air flow rate:
remove existing spindle extension and replace with the new one. To do this, apply some screw locking paint (Loctite 290) in the tapped bore of the spindle extension.

→ Screw the guide element into the cover of the actuator using a face wrench[13)] (torque: 8.0 Nm).

→ To secure the switch spindle, apply some screw locking paint (Loctite 290) to the thread of the switch spindle.

→ Screw the switch spindle onto the spindle extension. To do this, there is a slot on the upper side (maximum torque: 1 Nm).

→ Push the puck onto the switch spindle until it engages.

MAN 1000329139 EN Version: E Status: RL (released | freigegeben) printed: 23.07.2026

valvesgo.com

13) *Journal Ø: 3 mm; journal gap: 23.5 mm*

valvesgo.com

2. Install positioner

→ Push the positioner onto the actuator. The puck must be aligned in such a way that it is inserted into the guide rail of the positioner.

NOTE!

Damaged printed circuit board or malfunction.

▸ Ensure that the puck is situated flat on the guide rail.

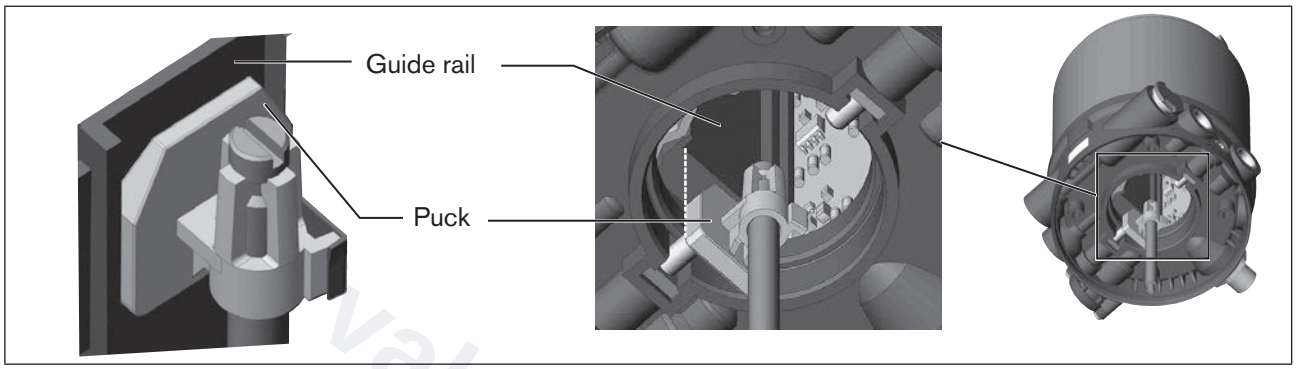

Figure 26: Aligning the puck

→ Press the positioner all the way down as far as the actuator and turn it into the required position.

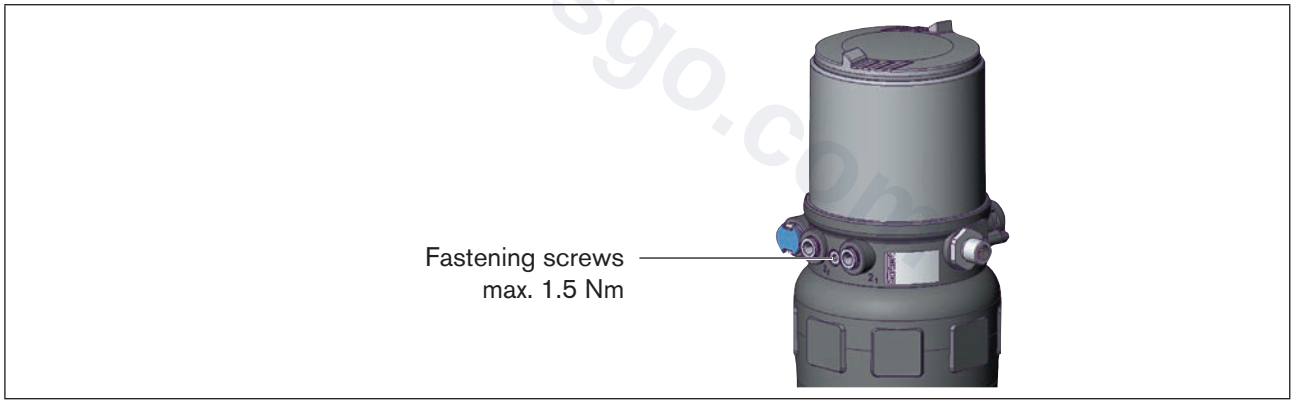

Figure 27: Installing the positioner

Ensure that the pneumatic connections of the positioner and those of the valve actuator are situated preferably vertically one above the other.
If they are positioned differently, longer hoses may be required other than those supplied in the accessory kit.

NOTE!

Too high torque when screwing in the fastening screw does not ensure degree of protection IP65 / IP67.

▸ The fastening screws may be tightened to a maximum torque of 1.5 Nm only.

→ Attach the positioner to the actuator using the two side fastening screws. In doing so, tighten the fastening screws hand-tight only (maximum torque: 1.5 Nm).

MAN 1000329139 EN Version: E Status: RL (released | freigegeben) printed: 23.07.2026

valvesgo.com

3. Install pneumatic connection between positioner and actuator

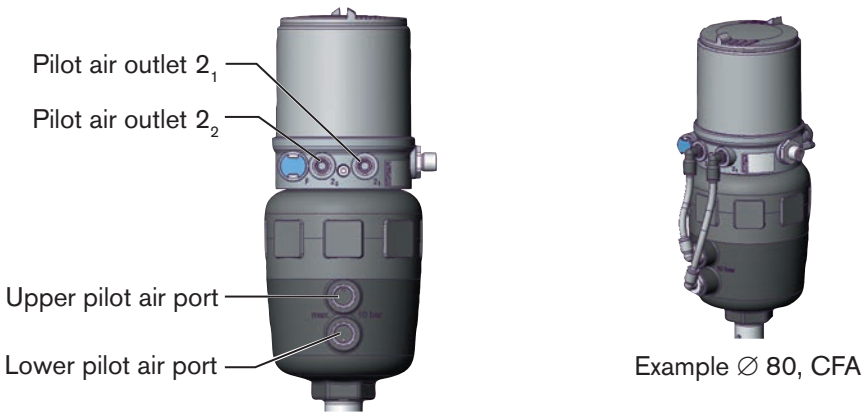

Figure 28: Installing the positioner

→ Screw the plug-in hose connectors onto the positioner and the actuator.

→ Using the hoses supplied in the accessory kit, make the pneumatic connection between the positioner and actuator with the following "Table 13: Pneumatic connection to actuator - CFA" or "Table 14: Pneumatic connection to actuator - CFB".

NOTE!

Damage or malfunction due to ingress of dirt and moisture.

To observe degree of protection IP65 / IP67:

- In the case of actuator size ∅ 80, ∅ 100
  connect the pilot air outlet which is not required to the free pilot air port of the actuator or seal with a plug.
- In the case of actuator size ∅ 125
  seal the pilot air outlet 22 which is not required with a plug and feed the free pilot air port of the actuator via a hose into a dry environment.

Control function A (CFA) Process valve closed in rest position (by spring force)			
Actuator size		∅ 80, ∅ 100	∅ 125
Positioner	Pilot air outlet	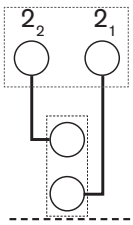	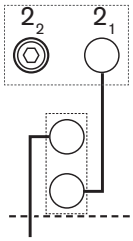
Actuator	Upper pilot air port		
	Lower pilot air port		
	Dry area		

Table 13: Pneumatic connection to actuator - CFA

MAN 1000329139 EN Version: E Status: RL (released | freigegeben) printed: 23.07.2026

valvesgo.com

Control function B (CFB) Process valve open in rest position (by spring force)			
Actuator size		∅ 80, ∅ 100	∅ 125
Positioner	Pilot air outlet	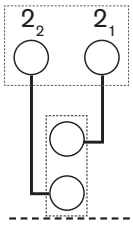	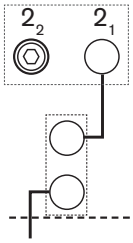
Actuator	Upper pilot air port		
	Lower pilot air port		
	Dry area		

Table 14: Pneumatic connection to actuator - CFB

"In rest position" means that the pilot valves of the positioner Type 8694 are isolated or not actuated.

8.4 Rotating the actuator module

The actuator module (positioner and actuator) can be rotated for straight seat valves and angle seat valves belonging to series 2300, 2301 and 27xx only.

The position of the connections can be aligned steplessly by rotating the actuator module (positioner and actuator) through 360°.

Process valves Type 2300, 2301 and 27xx: Only the entire actuator module can be rotated. The positioner cannot be rotated contrary to the actuator.
The process valve must be in the open position for alignment of the actuator module.

DANGER!

Risk of injury from high pressure in the equipment/device.

- Before working on equipment or device, switch off the pressure and deaerate/drain lines.

Procedure:

→ Clamp valve body in a holding device (only required if the process valve has not yet been installed).

NOTE!

Damage to the seat seal or the seat contour.

- When removing the actuator module, ensure that the valve is in open position.

→ Control function A: Open process valve.

MAN 1000329139 EN Version: E Status: RL (released | freigegeben) printed: 23.07.2026

valvesgo.com

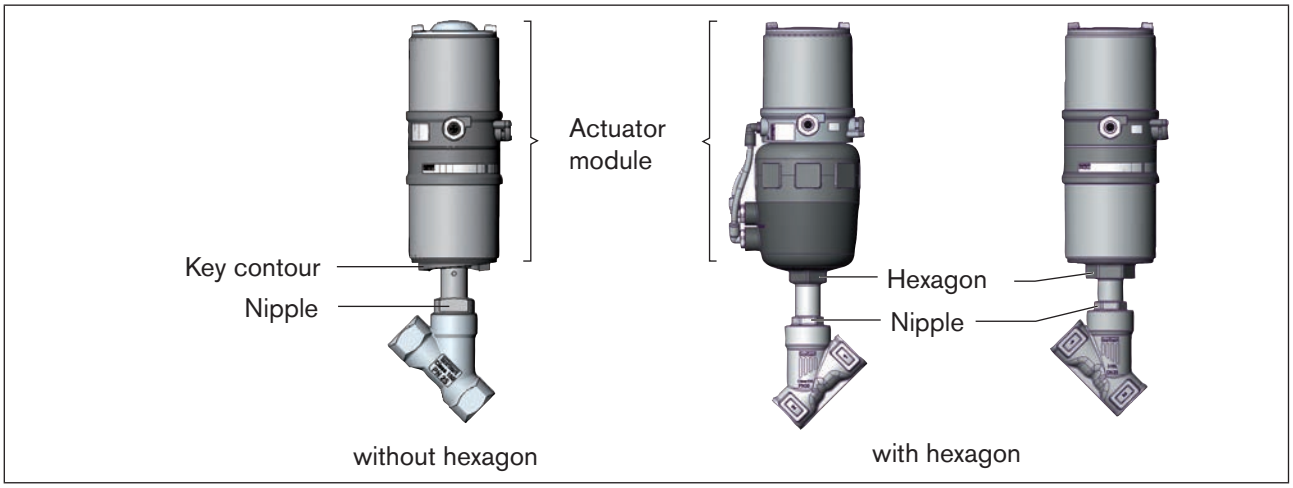

Figure 29: Rotating the actuator module

→ Using a suitable open-end wrench, counter the wrench flat on the pipe.

→ Actuator module without hexagon:
Fit special key[14] exactly in the key contour on the underside of the actuator.

→ Actuator module with hexagon:
Place suitable open-end wrench on the hexagon of the actuator.

WARNING!

Risk of injury from discharge of medium and pressure.

If the direction of rotation is wrong, the body interface may become detached.

▸ Rotate the actuator module in the specified direction only (see "Figure 30") .

→ Actuator module without hexagon:
Rotate clockwise (as seen from below) to bring the actuator module into the required position.

→ Actuator module with hexagon:
Rotate counter-clockwise (as seen from below) to bring the actuator module into the required position.

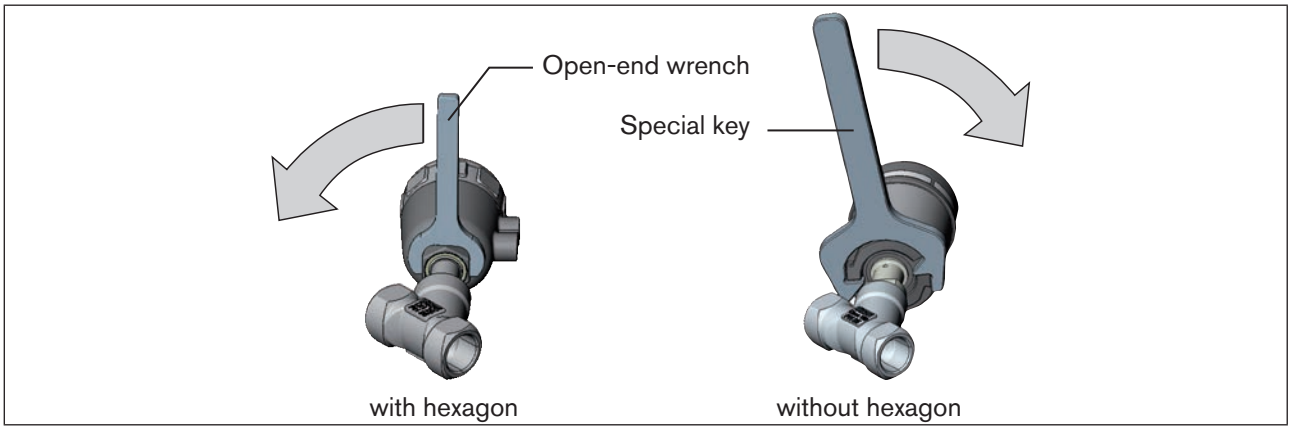

Figure 30: Rotating with special key / open-end wrench

[14] *The special key (665702) is available from your Bürkert sales office.*

MAN 1000329139 EN Version: E Status: RL (released | freigegeben) printed: 23.07.2026

valvesgo.com

8.5 Rotating the positioner for process valves belonging to series 26xx and 27xx

If the connecting cables or hoses cannot be fitted properly following installation of the process valve, the positioner can be rotated contrary to the actuator.

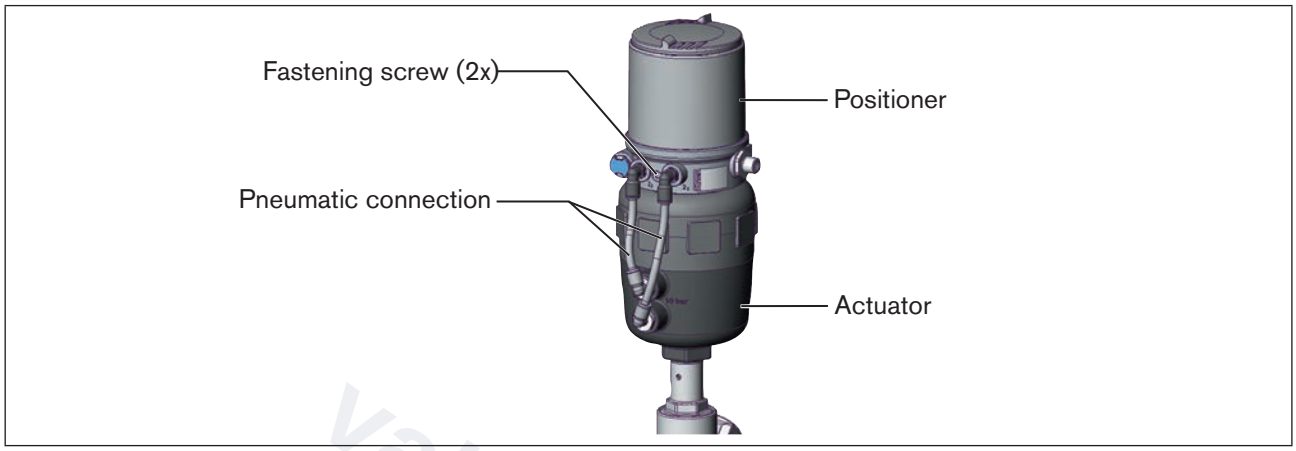

Figure 31: Rotating the positioner, series 26xx and 27xx

Procedure

→ Loosen the pneumatic connection between the positioner and the actuator.

→ Loosen the fastening screws (hexagon socket wrench size 2.5).

→ Rotate the positioner into the required position.

NOTE!

Too high torque when screwing in the fastening screw does not ensure degree of protection IP65 / IP67.

▸ The fastening screw may be tightened to a maximum torque of 1.5 Nm only.

→ Tighten the fastening screws hand-tight only (maximum torque: 1.5 Nm).

→ Re-attach the pneumatic connections between the positioner and the actuator. If required, use longer hoses.

MAN 1000329139 EN Version: E Status: RL (released | freigegeben) printed: 23.07.2026

valvesgo.com

9 PNEUMATIC INSTALLATION

DANGER!

Risk of injury from high pressure in the equipment/device.

- Before working on equipment or device, switch off the pressure and deaerate/drain lines.

WARNING!

Risk of injury from improper installation.

- Installation may be carried out by authorized technicians only and with the appropriate tools.

Risk of injury from unintentional activation of the system and an uncontrolled restart.

- Secure system from unintentional activation.
- Following installation, ensure a controlled restart.

Procedure:

→ Connect the control medium to the pilot air port (1) (3 – 7 bar; instrument air, free of oil, water and dust).

→ Attach the exhaust air line or a silencer to the exhaust air port (3) and, if available to the exhaust air port (3.1)

Important information for the problem-free functioning of the device:

- The installation must not cause back pressure to build up.
- Select a hose for the connection with an adequate cross-section.
- The exhaust air line must be designed in such a way that no water or other liquid can get into the device through the exhaust air port (3) or (3.1).

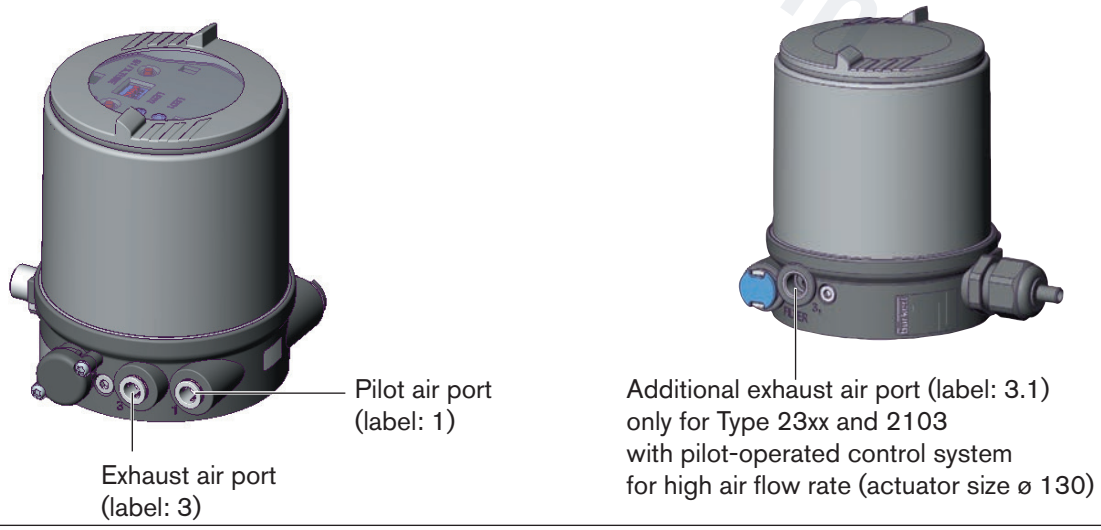

Figure 32: Pneumatic connection

MAN 1000329139 EN Version: E Status: RL (released | freigegeben) printed: 23.07.2026

valvesgo.com

Caution:(Exhaust air concept)**:**
In compliance with degree of protection IP67, an exhaust air line must be installed in the dry area.

Keep the adjacent supply pressure **always** at least 0.5 – 1 bar above the pressure which is required to move the actuator to its end position. This ensures that the control behavior is not extremely negatively affected in the upper stroke range on account of too little pressure difference.

During operation keep the fluctuations of the pressure supply as low as possible (max. ±10 %). If fluctuations are greater, the control parameters measured with the *X.TUNE* function are not optimum.

9.1 Manual actuation of the actuator via pilot valves

9.1.1 Single-acting actuators (control function A and B)

The actuator can be moved without a power supply from the rest position to its end position and back again. To do this, the pilot valves must be actuated with a screwdriver.

NOTE!

The hand lever may be damaged if it is simultaneously pressed and turned.

▸ Do not press the hand lever when turning it.

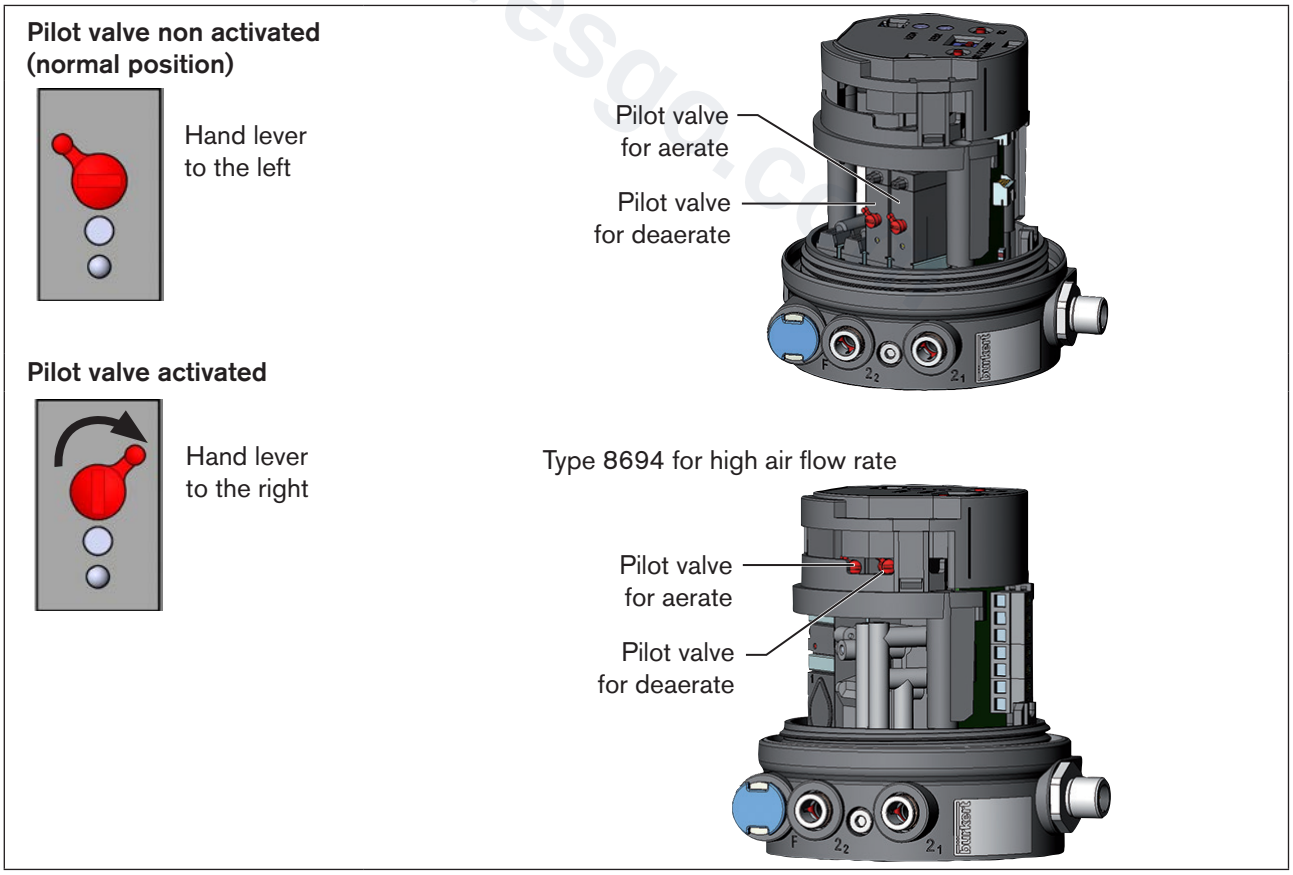

Figure 33: Pilot valves for aerate and deaerate the actuator

MAN 1000329139 EN Version: E Status: RL (released | freigegeben) printed: 23.07.2026

valvesgo.com

Move actuator to end position

Turn the hand levers to the right using a screwdriver.

Note: - do not press the hand levers when turning them
- observe the sequence as described below

→ 1. Actuate hand lever pilot valve deaeration. → 2. Actuate hand lever pilot valve aeration. Both hand levers point to the right. The actuator moves to the end position.	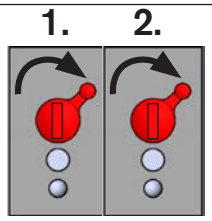 Type 8694 for high air flow rate 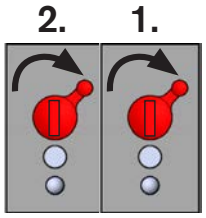

Figure 34: Move actuator to end position

Move actuator back to the rest position

Turn the hand levers to the left using a screwdriver.

Note: - do not press the hand levers when turning them
- observe the sequence as described below

→ 1. Actuate hand lever pilot valve aeration. → 2. Actuate hand lever pilot valve deaeration. Both hand levers point to the left (normal position). The actuator moves by spring force to the rest position.	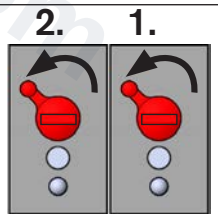 Type 8694 for high air flow rate 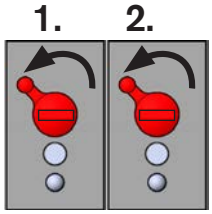

Figure 35: Move actuator back to the rest position

Caution:
If the pilot valves are actuated, electrical control is not possible.

▸ Move hand levers to normal position before starting up the device.

MAN 1000329139 EN Version: E Status: RL (released | freigegeben) printed: 23.07.2026

valvesgo.com

10 ELECTRICAL INSTALLATION 24 V DC

All electrical inputs and outputs of the device are not galvanically isolated from the supply voltage.

Two kinds of connections are used for the electrical bonding of the positioner:

- **Cable gland**
  with cable gland M16 x 1.5 and screw-type terminals
- **Multi-pole**
  with circular plug-in connector M12 x 1, 8-pole

10.1 Safety instructions

DANGER!

Risk of electric shock.

- Before working on equipment or device, switch off the power supply and secure to prevent reactivation.
- Observe applicable accident prevention and safety regulations for electrical equipment.

WARNING!

Risk of injury from improper installation.

- Installation may be carried out by authorized technicians only and with the appropriate tools.

Risk of injury from unintentional activation of the system and an uncontrolled restart.

- Secure system from unintentional activation.
- Following installation, ensure a controlled restart.

Minimum temperature rating of the cable to be connected to the field wiring terminals: 75 °C

10.2 Electrical installation with circular plug-in connector

DANGER!

Risk of electric shock.

- Before working on equipment or device, switch off the power supply and secure to prevent reactivation.
- Observe applicable accident prevention and safety regulations for electrical equipment.

10.2.1 Designation of the contacts Type 8694

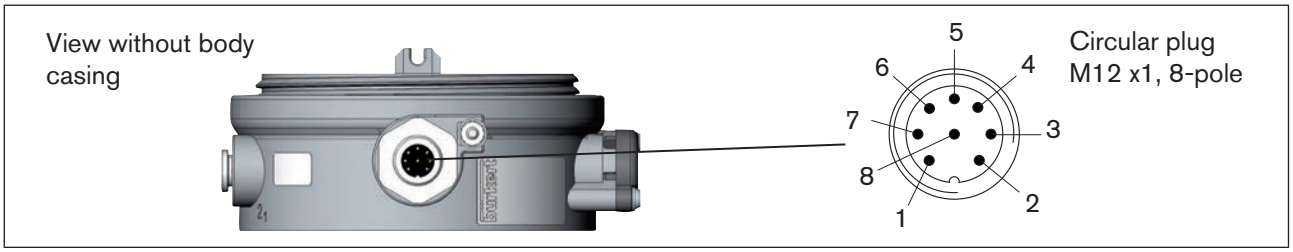

Figure 36: Circular plug M12 x 1, 8-pole

MAN 1000329139 EN Version: E Status: RL (released | freigegeben) printed: 23.07.2026

valvesgo.com

10.2.2 Connection of the positioner Type 8694

→ Connect the pins according to the model (options) of the positioner.

Input signals of the control center (e.g. PLC) - circular plug M12 x 1, 8-pole

Pin	Wire color[15)]	Configuration	External circuit / signal level
1	white	Set-point value + (0/4 – 20 mA)	1 ○——— + (0/4 ... 20 mA)
2	brown	Set-point value GND	2 ○——— GND
5	grey	Binary input +	5 ○——— + ——— 0 ... 5 V (log. 0) 10 ... 30 V (log. 1)
6	pink	Binary input GND	identical to Pin 3 (GND)

Table 15: Pin assignment - input signals of the control center - circular plug M12 x 1, 8-pole

Output signals to the control center (e.g. PLC) - circular plug M 12 x 1, 8-pole (required for analogue output option only)

Pin	Wire color[15)]	Configuration	External circuit / signal level
8	red	Analogue position feedback +	8 ○——→ + (0/4 ... 20 mA)
7	blue	Analogue position feedback GND	7 ○——→ GND

Table 16: Pin assignment - output signals of the control center - circular plug M12 x 1, 8-pole

Operating voltage (circular plug M12 x 1, 8-pole)

Pin	Wire color[15)]	Configuration	External circuit
4	yellow	+ 24 V	4 ○——┐ 24 V DC ± 10 % max. residual ripple 10 %
3	green	GND	3 ○——┘

Table 17: Pin assignment - operating voltage (circular plug M12 x 1, 8-pole)

When the supply voltage is applied, the positioner is operating.

→ Make the required basic settings and actuate the automatic adjustment of the positioner, as described in the chapter entitled "12 Start-up".

15) *The indicated colors refer to the connecting cable available as an accessory (919061)*

MAN 1000329139 EN Version: E Status: RL (released | freigegeben) printed: 23.07.2026

valvesgo.com

10.3 Electrical installation with cable gland

DANGER!

Risk of electric shock.

- Before working on equipment or device, switch off the power supply and secure to prevent reactivation.
- Observe applicable accident prevention and safety regulations for electrical equipment.

NOTE!

Breakage of the pneumatic connection pieces due to rotational impact.

- When unscrewing and screwing in the body casing, do not hold the actuator of the process valve but the connection housing.

→ The screw-type terminals can be accessed by unscrewing the body casing (stainless steel).

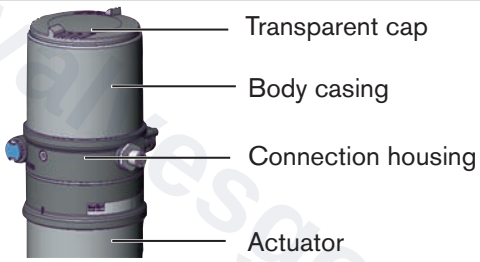

Figure 37: Open positioner

→ Push the cables through the cable gland.

MAN 1000329139 EN Version: E Status: RL (released | freigegeben) printed: 23.07.2026

valvesgo.com

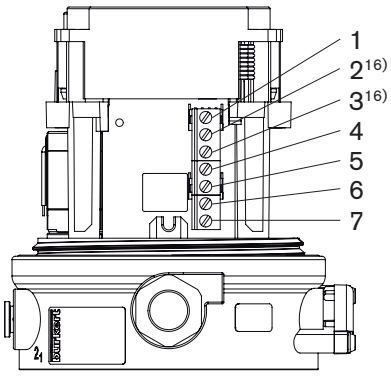

Figure 38: Connection of screw-type terminals

→ Connect the positioner according to the following tables:

Input signals from the control centre (e.g. PLC)

Terminal	Configuration	External circuit
4	Set-point value +	4 ○——— + (0/4 ... 20 mA)
5	Set-point value GND	5 ○——— GND
1	Binary input +	1 ○——— + ——— 0 ... 5 V (log. 0) 10 ... 30 V (log. 1) with reference to terminal 7 (GND)

Table 18: Assignment of screw-type terminals - input signals of the control center - cable gland

Output signals to the control center (e.g. PLC; for analog output option only)

Terminal	Configuration	External circuit
2	Analogue position feedback +	2 ○——▶ + (0/4 ... 20 mA)
3	Analogue position feedback GND	3 ○——▶ GND

Table 19: Assignment of screw-type terminals - output signals to the control center - cable gland

Operating voltage

Terminal	Configuration	External circuit
6	Operating voltage +	6 ○——┬ 24 V DC ± 10 % max. residual ripple 10 %
7	Operating voltage GND	7 ○——┴

Table 20: Assignment of screw-type terminals - operating voltage - cable gland

[16)] *Option only*

MAN 1000329139 EN Version: E Status: RL (released | freigegeben) printed: 23.07.2026

valvesgo.com

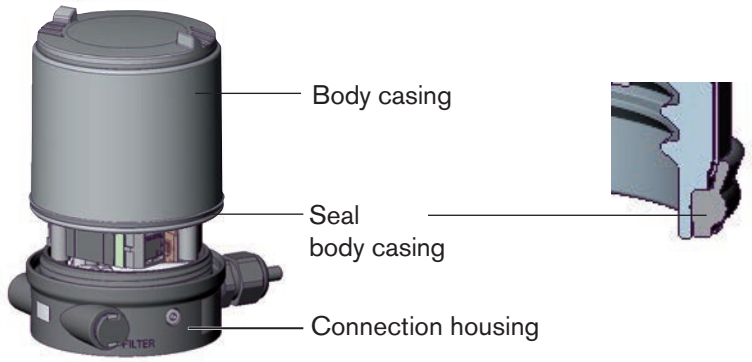

Figure 39: Position of the seal in the body casing

→ Check that the seal is correctly positioned in the body casing.

NOTE!

Breakage of the pneumatic connection pieces due to rotational impact.

- When unscrewing and screwing in the body casing, do not hold the actuator of the process valve but the connection housing.

Damage or malfunction due to penetration of dirt and humidity.

To ensure degree of protection IP65 / IP67:

- Tighten the union nut on the cable gland according to the cable size or dummy plugs used (approx. 1.5 Nm).
- Screw the body casing in all the way.

→ Tighten union nut on the cable gland (torque approx. 1.5 Nm).

→ Close the device (assembly tool: 674077[17]).

When the power supply is applied, the positioner is operating.

→ Make the required basic settings and actuate the automatic adjustment of the positioner, as described in the chapter entitled "12 Start-up".

[17] *The assembly tool (674077) is available from your Bürkert sales office.*

MAN 1000329139 EN Version: E Status: RL (released | freigegeben) printed: 23.07.2026

valvesgo.com

11 AS-INTERFACE INSTALLATION

11.1 AS-Interface connection

AS-Interface (Actuator Sensor Interface) is a field bus system which is used primarily for networking binary sensors and actuators (slaves) with a higher-level control (master).

Bus line

Unshielded two-wire line (AS-Interface line as AS-Interface flat cable) along which both information (data) and energy (power supply for the actuators and sensors) are transmitted.

Network topology

Freely selectable within wide limits, i.e. star, tree and line networks are possible. Further details are described in the AS-Interface specification (A/B slave model conforms to the version 3.0 specification).

11.2 Maximum length of the bus line

The bus line may have a maximum length of 100 m. During the design phase, consider all AS-Interface lines in an AS-Interface section, i.e. even the stub lines to the individual slaves.

The development stage which is actually possible depends on the sum of all the individual operating currents per positioner which are supplied on a common AS-Interface bus segment via the bus.

- Observe the maximum power supply ≤ 8 A via certified AS-Interface power supply units. Details see AS-Interface specification.
- Note the optional model “AS-Interface with external power supply” to relieve the AS-Interface bus segment (see “11.7.2”).
- Use cables according to the AS-Interface specification. If other cables are used, the maximum bus line length will change.

11.3 Technical data for AS-Interface PCBs

	Version Profile S-7.3.4	Version Profile S-7.A.5
Supply	via AS-Interface	via AS-Interface
Outputs	16 bit set-point value	16 bit set-point value
Inputs	-	16 bit feedback
Certification	Certificate no. 87301 after version 3.0	Certificate no. xxxxx after version 3.0

Table 21: Technical data

MAN 1000329139 EN Version: E Status: RL (released | freigegeben) printed: 23.07.2026

valvesgo.com

11.4 Programming data

	Version Profile S-7.3.4	Version Profile S-7.A.5
I/O configuration	7 hex	7 hex
ID code	3 hex (analog profile)	A hex
Extended ID code 1	F hex (Default value, can be changed by the user)	7 hex
Extended ID code 2	4 hex	5 hex
Profile	S-7.3.4	S-7.A.5

Table 22: Programming data

Bit configuration

1. Output set-point value (Value range 0 – 10.000, is equivalent to 0 – 100 %)
2. Input feedback[18)] (Value range 0 – 10.000 (16 Bit, signed integer), is equivalent to 0 – 100 %)
   Values below 0 (0.0 %) and above 10,000 (100.0 %) are possible due to mechanical tolerances.
   Example: Position -1.0 % corresponds to -100 = 0xFF9C

Byte 2								Byte 1							
D15	D14	D13	D12	D11	D10	D9	D8	D7	D6	D5	D4	D3	D2	D1	D0

Parameter bit	P3	P2	P1	P0
Output	not used	not used	not used	not used

Table 23: Bit configuration

valvesgo.com

MAN 1000329139 EN Version: E Status: RL (released | freigegeben) printed: 23.07.2026

11.5 Communication sequence for the version S-7.A.5 profile

1. Following start-up, the AS-Interface master (from master class 4) automatically replaces the ID object with the S-7.A.5 slave.

Master transmits 3 bytes:

1. Byte:	Code	=	16	dez
2. Byte:	Index	=	0	dez
3. Byte:	Length	=	5	dez

→

S-7.A.5 slave replies with 6 bytes

1. Byte:	Code	=	80	dez
2. Byte:	Vendor ID (high)	=	120	dez
3. Byte:	Vendor ID (low)			
4. Byte:	Device ID (high)	=	1	dez
5. Byte:	Device ID (low)			
6. Byte:	1 word output + 1 word input	=	34	dez

or with 2 Byte (Read Response not OK)

1. Byte:	Code	=	144	dez
2. Byte:	Error Code	=	0	dez (no error)
			1	dez (illegal index)
			2	dez (illegal length)
			3	dez (request not implemented)
			4	dez (busy)

2. Then the following cyclical commands can be used:

Code = 0 (get cyclic data from Slave)
→ for feedback 0 – 100 %

Code = 1 (put cyclic data to slave)
→ for set-point value 0 – 100 %

---

18) *Only for version with S-7.A.5 profile*

MAN 1000329139 EN Version: E Status: RL (released | freigegeben) printed: 23.07.2026

valvesgo.com

valvesgo.com

11.6 LED status display

NOTE!

Breakage of the pneumatic connection pieces due to rotational impact.

- When unscrewing and screwing in the body casing, do not hold the actuator of the process valve but the connection housing.

The LED status display indicates the bus status (LED green and red).

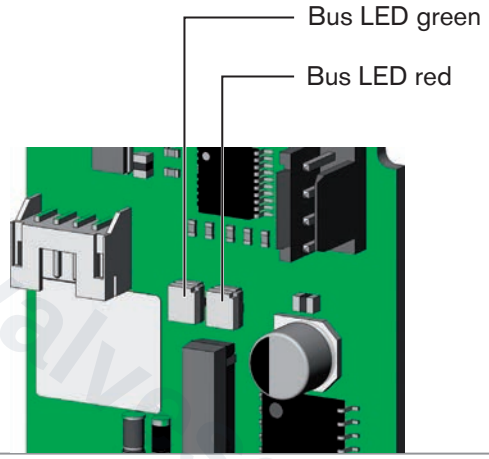

Figure 40: LED status display AS-Interface

LED green	LED red	
off	off	POWER OFF
off	on	No data traffic (expired Watch Dog at slave address does not equal 0)
on	off	OK
flashing	on	Slave address equals 0
off	flashing	Electronic error or external reset
flashing	flashing	Timeout bus communication after 100 ms (periphery error)

Table 24: LED Status Display AS-Interface

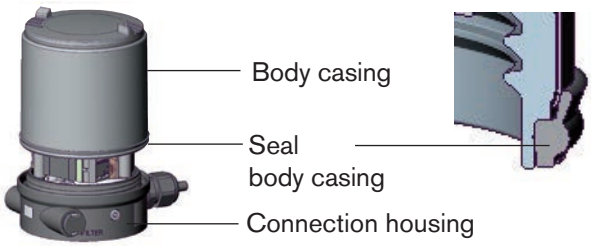

Figure 41: Position of the seal in the body casing

MAN 1000329139 EN Version: E Status: RL (released | freigegeben) printed: 23.07.2026

valvesgo.com

→ Check that the seal is correctly positioned in the body casing.

NOTE!

Breakage of the pneumatic connection pieces due to rotational impact.

- When unscrewing and screwing in the body casing, do not hold the actuator of the process valve but the connection housing.

Damage or malfunction due to penetration of dirt and humidity.

- To observe degree of protection IP65 / IP67, screw the transparent cap in all the way.

→ Close the device (assembly tool: 674077[19]).

[19] *The assembly tool (674077) is available from your Bürkert sales office.*

MAN 1000329139 EN Version: E Status: RL (released | freigegeben) printed: 23.07.2026

11.7 Electrical installation AS-interface

11.7.1 Safety instructions

DANGER!

Risk of electric shock.

- Before working on equipment or device, switch off the power supply and secure to prevent reactivation.
- Observe applicable accident prevention and safety regulations for electrical equipment.

WARNING!

Risk of injury from improper installation.

- Installation may be carried out by authorized technicians only and with the appropriate tools.

Risk of injury from unintentional activation of the system and an uncontrolled restart.

- Secure system from unintentional activation.
- Following installation, ensure a controlled restart.

valvesgo.com

valvesgo.com

11.7.2 Connection with circular plug-in connector M12 x 1, 4-pole, male

It is not necessary to open the positioner for the multi-pole model.

Bus connection without external / with external supply voltage

Pin	Designation	Configuration
1	Bus +	AS-Interface bus line +
2	NC or GND (optional)	not used or external supply voltage – (optional)
3	Bus –	AS-Interface bus line -
4	NC or 24 V + (optional)	not used or external supply voltage + (optional)

Table 25: Pin assignment of circular plug-in connector for AS-Interface

Views of plug: From the front onto the pins, the soldered connections are behind

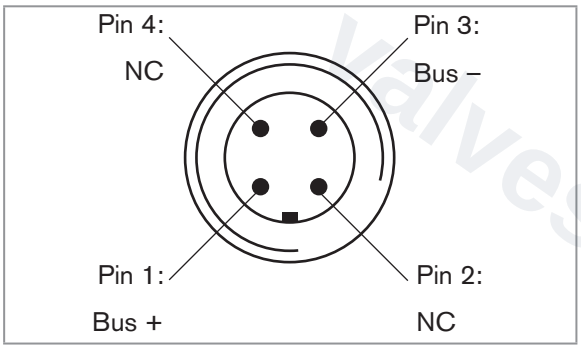

Figure 42: Bus connection without external supply voltage

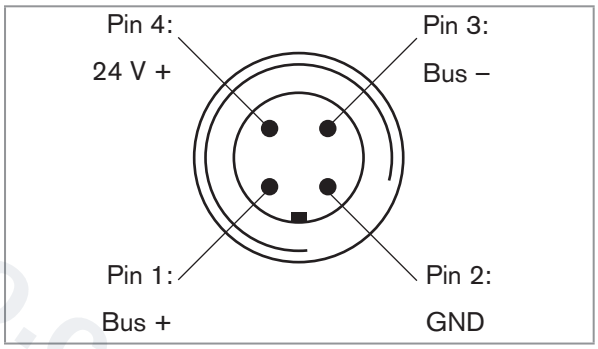

Figure 43: Bus connection with external supply voltage (optional)

When the supply voltage is applied, the positioner is operating.

→ Make the required basic settings and actuate the automatic adjustment of the positioner, as described in the chapter entitled "12 Start-up".

11.7.3 Connection with multi-pole cable and ribbon cable terminal

As an alternative to the bus connection model with 4-pole circular plug, there is the positioner with multi-pole cable (M12 circular plug) and ribbon cable terminal. The wiring diagram of the circular plug corresponds to the bus connection of the M12 4-pole circular plug (see "Figure 42" and "Figure 43") and can easily be connected to the ribbon cable terminal (see "Figure 45").

Figure 44: Positioner 8694 with multi-pole cable and ribbon cable terminal

valvesgo.com

Calculated bus line length:

When designing the system, consider the length of the cable which is fed directly to the positioner for the maximum bus line length (multi-pole cable and cable inside: 1.0 m).

Example calculation:

When using 62 positioner with multi-pole cable, the AS-Interface flat cable may still be maximum 38 m long.

100 m – 62 x 1.0 m = 38 m

If the calculated bus line length of 100 m is exceeded, a commercially available AS-Interface repeater can be used.

Handling the ribbon cable terminal

The multi-pole cable features a ribbon cable terminal - with M12 plug-in connector branch circuit - for AS-Interface flat cable. The ribbon cable terminal contacts the AS-Interface flat cable by means of penetration technology which allows installation by "clipping in" the AS-Interface flat cable without cutting and without removing insulation.

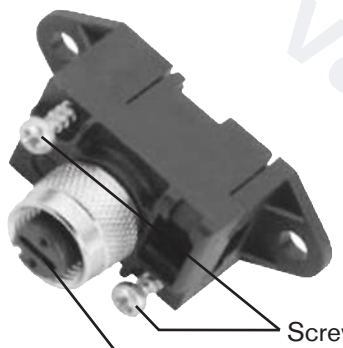

Work steps:

→ Open the ribbon cable terminal
(loosen screws and remove cover)

→ Insert flat cable conclusively

→ Close ribbon cable terminal again

→ Tighten screws
Slightly undo thread-forming screws
(approx. 3/4 turn to the left) and position them on the existing tapped bore and screw in.

Figure 45: Ribbon cable terminal

When the supply voltage is applied, the positioner is operating.

→ Make the required basic settings and actuate the automatic adjustment of the positioner, as described in the chapter entitled “12 Start-up”.

MAN 1000329139 EN Version: E Status: RL (released | freigegeben) printed: 23.07.2026

valvesgo.com

12 START-UP

12.1 Safety instructions

DANGER!

Risk of injury from high pressure in the equipment/device.

- Before working on equipment or device, switch off the pressure and deaerate/drain lines.

WARNING!

Risk of injury from improper operation.

Improper operation may result in injuries as well as damage to the device and the area around it.

- Before start-up, ensure that the operating personnel are familiar with and completely understand the contents of the operating instructions.
- Observe the safety instructions and intended use.
- Only adequately trained personnel may operate the equipment/the device.

12.2 Specifying the standard settings

The basic settings of the positioner are implemented at the factory.

To adjust the positioner to local conditions, the *X.TUNE* function must be run following installation.

12.2.1 Running the automatic adjustment *X.TUNE*

WARNING!

Danger due to the valve position changing when the *X.TUNE* function is running.

When the *X.TUNE* is running under operating pressure, there is an acute risk of injury.

- Never run *X.TUNE* while a process is running.
- Take appropriate measures to prevent the equipment from being accidentally actuated.

NOTE!

Avoid maladjustment of the controller due to an incorrect pilot pressure or applied operating medium pressure.

- Run *X.TUNE* **whenever** the pilot pressure (= pneumatic auxiliary energy) is available during subsequent operation.
- Run the *X.TUNE* function preferably **without** operating medium pressure to exclude interference caused by flow forces.

To run *X.TUNE*, the positioner must be in the AUTOMATIC operating status (DIP switch 4 = OFF).

MAN 1000329139 EN Version: E Status: RL (released | freigegeben) printed: 23.07.2026

valvesgo.com

NOTE!

Breakage of the pneumatic connection pieces due to rotational impact.

- When unscrewing and screwing in the body casing or transparent cap, do not hold the actuator of the process valve but the connection housing.

→ To operate the DIP switches, for
Version 1: unscrew the body casing
Version 2: unscrew the transparent cap

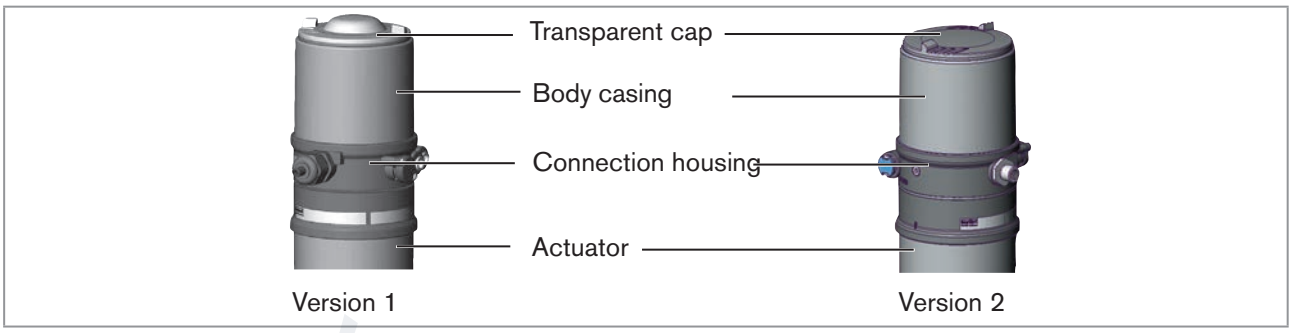

Figure 46: Open positioner

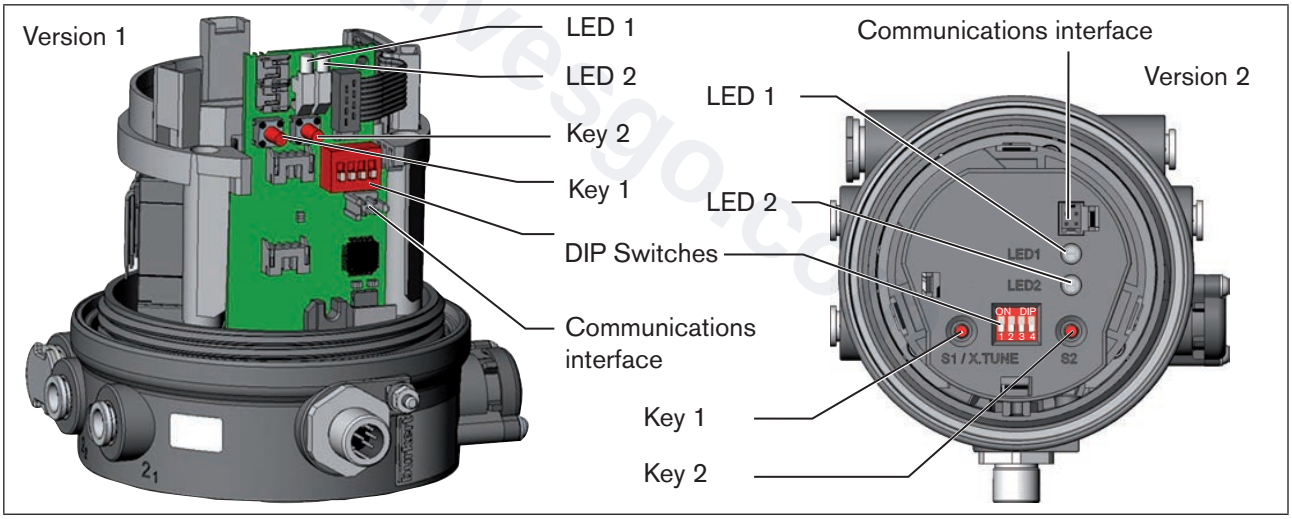

Figure 47: Automatic adjustment X.TUNE

→ Start the *X.TUNE* by pressing button 1[20] for 5 s.

While the *X.TUNE* is running, LED 1 flashes quickly (green).

When the automatic adjustment is complete, LED 1 flashes slowly (green)[21].

The changes are automatically transferred to the memory (EEPROM) provided the *X.TUNE* function is successful.

Important: When the *X.TUNE* function is activated, the actuator cannot be actuated via the AS-Interface communication.

20) *The X.TUNE can also be started via communications software.*
21) *If a fault occurs, LED 1 is lit red.*

MAN 1000329139 EN Version: E Status: RL (released | freigegeben) printed: 23.07.2026

valvesgo.com

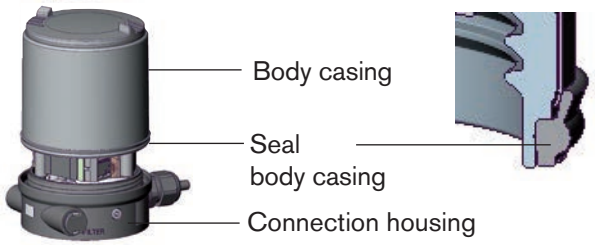

Figure 48: Position of the seal in the body casing

→ Version 1: Check that the seal is correctly positioned in the body casing.

NOTE!

Breakage of the pneumatic connection pieces due to rotational impact.

- When unscrewing and screwing in the body casing or transparent cap, do not hold the actuator of the process valve but the connection housing.

Damage or malfunction due to penetration of dirt and humidity.

- To observe degree of protection IP65 / IP67, screw the transparent cap in all the way.

→ Close the device (assembly tool: 674077[22]).

valvesgo.com

MAN 1000329139 EN Version: E Status: RL (released | freigegeben) printed: 23.07.2026

22) *The assembly tool (674077) is available from your Bürkert sales office.*

13 OPERATION AND FUNCTION

The positioner type 8694 has different basic and additional functions which can be configured and parameterized via the DIP switches or the communications software.

13.1 Basic functions

The following basic functions can be activated via the DIP switches (*CUTOFF and CHARACT*) or changed (*DIR.CMD).*

Function	Description	DIP Switches	OFF	ON
DIR.CMD	Effective direction between input signal and set-point position	1	rise	fall
CUTOFF	Sealing function for position controller	2	Sealing function off	Sealing function on
CHARACT	Selection of the Transfer Characteristic between Input Signal and Stroke (Correction Characteristic)	3	Linear characteristic	Correction characteristic

Table 26: Basic functions of DIP switches

The following basic function can be changed via the communications software only.

Function	Description	Factory setting
INPUT	Entry of the standard signal input for the set-point value	4 – 20 mA
RESET	Reset to factory settings	
X.TUNE	Automatic adjustment of the positioner to the relevant operating conditions	

Table 27: Basic function of communications software

The *INPUT*, *CUTOFF and CHARACT functions can* be parameterized via the communications software.

MAN 1000329139 EN Version: E Status: RL (released | freigegeben) printed: 23.07.2026

valvesgo.com

valvesgo.com

13.1.1 *DIR.CMD* - Effective direction of the positioner set-point value

You can use this function to adjust the effective direction between the input signal (INPUT) and the nominal position of the actuator.

Factory setting: DIP switch set to OFF (ascending)

DIP Switches	Position	Function
1	ON	Reversal of the effective direction of the set-point value (*DIR.CMD*) (set-point value 20 – 4 mA corresponds to position 0 – 100 %), fall
	OFF	Normal effective direction of the set-point value (set-point value 4 – 20 mA corresponds to position 0 – 100 %), rise

Table 28: DIP switch 1

The effective direction (*DIR.CMD*) can **only** be changed via DIP switch 1 in the positioner.

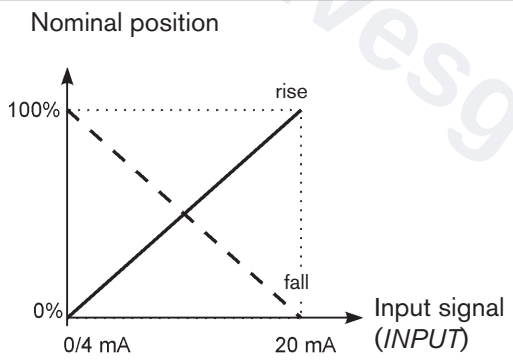

Figure 49: DIR.CMD graph

MAN 1000329139 EN Version: E Status: RL (released | freigegeben) printed: 23.07.2026

valvesgo.com

13.1.2 *CUTOFF* - Sealing function for the positioner

This function causes the valve to be sealed outside the control range.

Control mode resumes at a hysteresis of 1%.

Factory setting: DIP switch 2 set to OFF (no sealing function)

DIP Switches	Position	Function
2	ON	Sealing function active. The valve completely closes below 2 %[23] and opens above 98 % of the set-point value (*CUTOFF*)
	OFF	No sealing function

Table 29: DIP switch 2

The communications software can be used to change the limits for the position set-point value as a percentage.

The switching position of the DIP switches in the positioner has priority over the communications software, i.e. settings of the sealing function (*CUTOFF*) which are modified via the communications software are only active if DIP switch 2 in the positioner is set to ON.

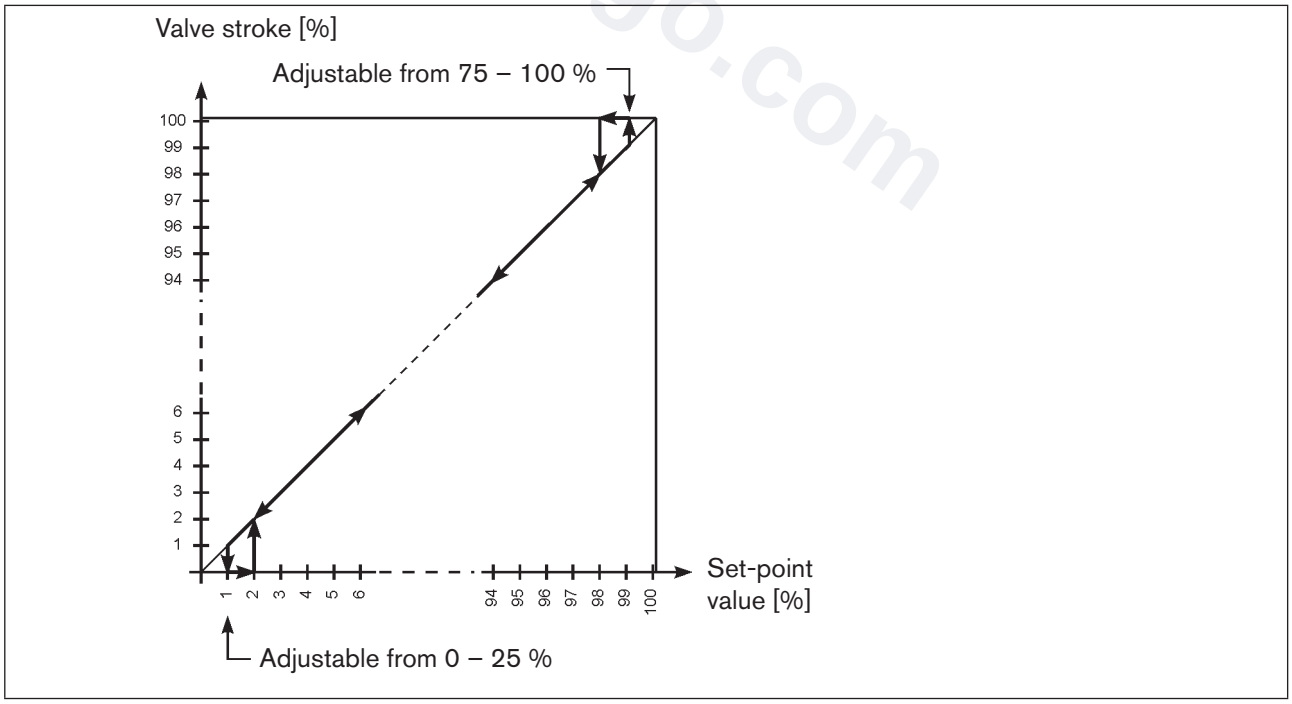

Figure 50: CUTOFF graph

[23] *Factory setting can be changed via communications software.*

MAN 1000329139 EN Version: E Status: RL (released | freigegeben) printed: 23.07.2026

valvesgo.com

13.1.3 *CHARACT* - Select the transfer characteristic between input signal (position set-point value) and stroke

Characteristic (customer-specific characteristic)

This function can be used to activate a transfer characteristic with respect to set-point value (set-point position) and valve stroke for correction of the flow-rate or operating characteristic.

The transfer characteristic can be changed via the communications software only.

Factory setting: DIP switch 3 set to OFF (linear)

DIP Switches	Position	Function
3	ON	Correction characteristic for adjustment of the operating characteristic (linearization of the process characteristic *CHARACT*) [24]
	OFF	Linear characteristic

Table 30: DIP switch 3

The switching position of the DIP switches in the positioner has priority over the communications software, i.e. settings of the correction characteristic (*CHARACT*) which are modified via the communications software are only active if DIP switch 3 in the positioner is set to ON.

Characteristics which can be selected via the communications software:

Characteristic	Description
linear	Linear characteristic
1 : 25	Equal percentage characteristic 1 : 25
1 : 33	Equal percentage characteristic 1 : 33
1 : 50	Equal percentage characteristic 1 : 50
25 : 1	Inversely equal percentage characteristic 25 : 1
33 : 1	Inversely equal percentage characteristic 33 : 1
55 : 1	Inversely equal percentage characteristic 55 : 1
FREE	User-defined characteristic, freely programmable via nodes

Table 31: Selection of characteristics

[24] *The characteristic type can be changed via the communications software only.*

MAN 1000329139 EN Version: E Status: RL (released | freigegeben) printed: 23.07.2026

valvesgo.com

The flow characteristic $k_V = f(s)$ indicates the flow-rate of a valve, expressed by the value k_V as a function of the stroke s of the actuator spindle. It is determined by the design of the valve seat and the seat seal. In general two types of flow characteristics are implemented, the linear and the equal percentage.

In the case of linear characteristics, equal k_V value changes dk_V are assigned to equal stroke changes ds.

$$(dk_V = n_{lin} \cdot ds).$$

In the case of an equal percentage characteristic, an equal percentage change of the k_V value corresponds to a stroke change ds.

$$(dk_V/k_V = n_{eqlprct} \cdot ds).$$

The operating characteristic Q = f(s) specifies the correlation between the volumetric flow Q in the installed valve and the stroke s. This characteristic has the properties of the pipelines, pumps and consumers. It therefore exhibits a form which differs from the flow characteristic.

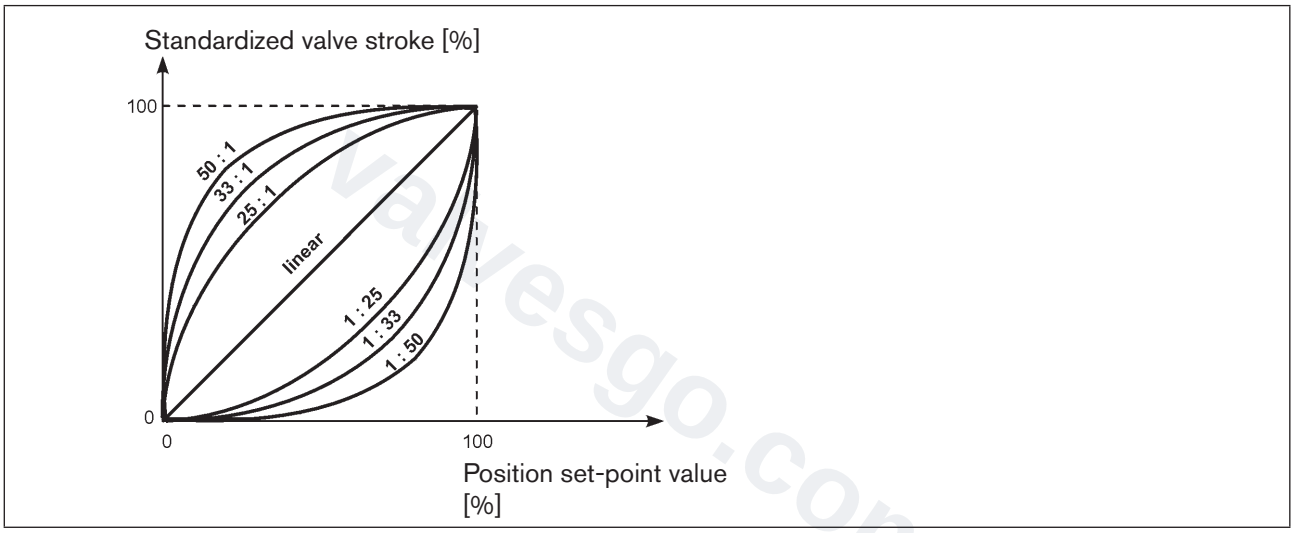

Figure 51: Characteristic

In the case of control tasks for closed-loop control systems it is usually particular demands which are placed on the course of the operating characteristic, e.g. linearity. For this reason it is occasionally necessary to correct the course of the operating characteristic in a suitable way. For this purpose the positioner features a transfer element which implements different characteristics. These are used to correct the operating characteristic.

Equal percentage characteristics 1:25, 1:33, 1:50, 25:1, 33:1, and 50:1 as well as a linear characteristic can be set. A characteristic can be freely programmed using nodes.

MAN 1000329139 EN Version: E Status: RL (released | freigegeben) printed: 23.07.2026

valvesgo.com

Entering the freely programmable characteristic

The characteristic is defined by 21 nodes distributed uniformly over the position set-point values ranging from 0 – 100%. They are spaced at intervals of 5%. A freely selectable stroke (adjustment range 0 – 100%) is assigned to each node. The difference between the stroke values of two adjacent nodes must not be greater than 20%.

Example of a programmed characteristic

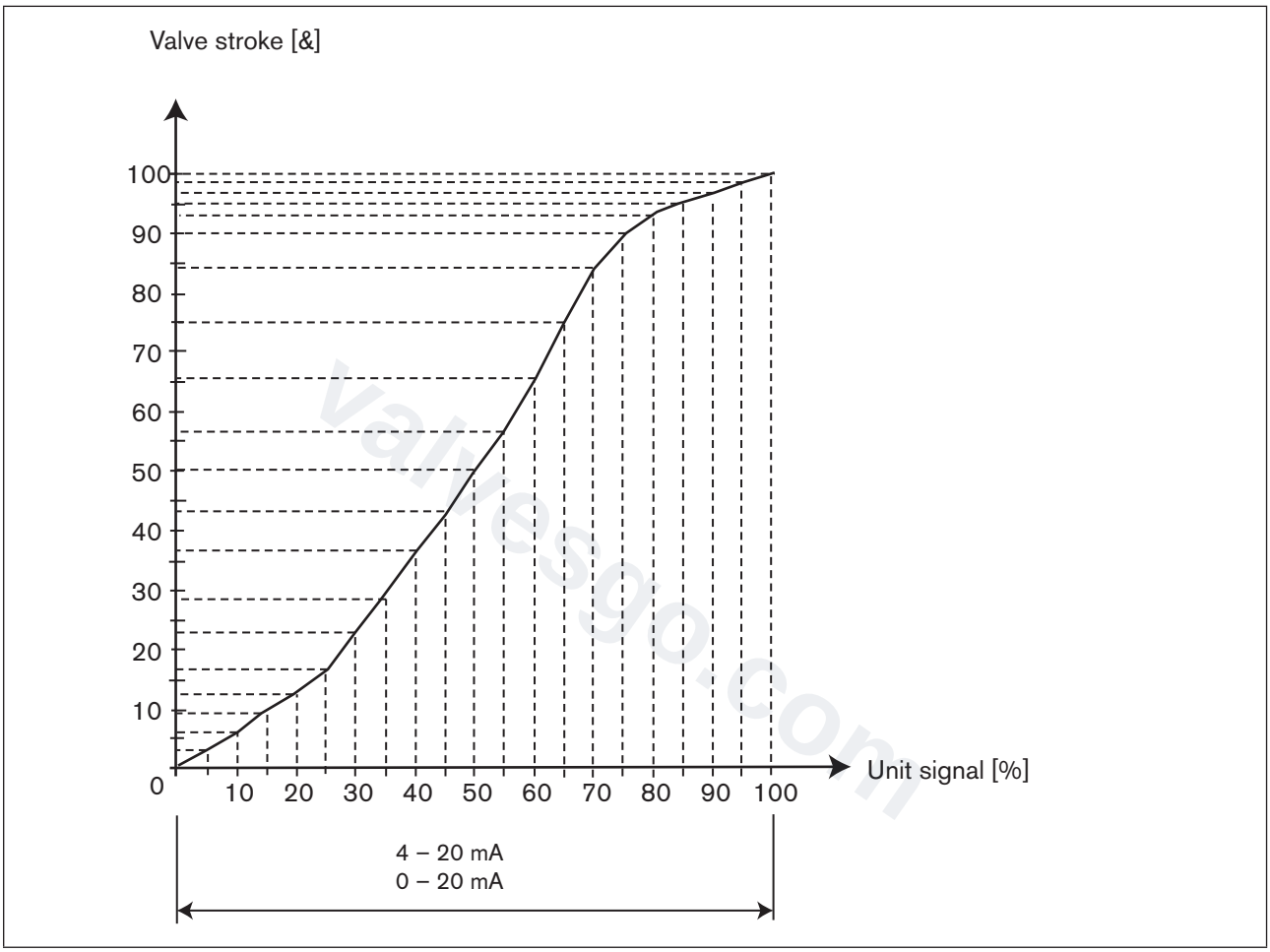

Figure 52: Example of a programmed characteristic

13.1.4 *INPUT* - Enter the input signal

Under this menu option, enter the unit signal used for the set-point value.

Factory setting: 4 – 20 mA

MAN 1000329139 EN Version: E Status: RL (released | freigegeben) printed: 23.07.2026

13.1.5 *RESET* - Reset to factory settings

This function can be used to reset the positioner to the factory settings.

13.1.6 *X.TUNE* - Automatic adjustment of the positioner to the relevant operating conditions

The *X.TUNE* function must be run for a function check of the positioner to adjust to specific local features.

WARNING!

While the *X.TUNE* function is running, the valve automatically moves from its current position.

- Never run *X.TUNE* while a process is running.
- Take appropriate measures to prevent the system / positioner from being unintentionally actuated.

NOTE!

Avoid maladjustment of the controller due to an incorrect compressed air supply or applied operating medium pressure.

- Run *X.TUNE* **whenever** the compressed air supply (= pneumatic auxiliary energy) is available during subsequent operation.
- Run the *X.TUNE* function preferably **without** operating medium pressure to exclude interference caused by flow forces.

To run *X.TUNE*, the positioner must be in the AUTOMATIC operating state (DIP switch 4 = OFF).

→ *Set up TUNE / TUNE Functions*.

→ Start *X.TUNE*. To do this, click „Start X.TUNE“ [2)].

The progress of *X.TUNE* is shown in the communication software:

When the automatic adjustment completes, a message appears.

The changes are automatically transferred to the positioner‘s memory (EEPROM) after the *X.TUNE* function is successful.

MAN 1000329139 EN Version: E Status: RL (released | freigegeben) printed: 23.07.2026

valvesgo.com

13.2 Auxiliary functions

The following additional functions can be configured and parameterized via the communications software:

Function	Description
DIR.ACTUATOR	Assignment of the aeration status of the actuator chamber to the actual position
SPLITRANGE	Signal split range; input signal as a % for which the valve runs through the entire stroke range.
X.LIMIT	Limit the mechanical stroke range
X.TIME	Limit the control speed
X.CONTROL	Parameterize the position controller
SAFE POSITION	Input the safety position
SIGNAL ERROR	Configuration of signal level fault detection
BINARY INPUT	Activation of the binary input
OUTPUT	Configuration of the outputs (only with auxiliary board for analogue feedback signal or binary outputs)

Table 32: Auxiliary functions

13.2.1 *DIR.ACTUATOR* - Effective direction of the actuator

Use this function to set the effective direction between the aeration state of the actuator and the actual position.

Factory setting: rise

Rise: Direct effective direction (deaerated → 0 %; aerated 100 %)
Case: Inverse effective direction (deaerated → 100 %; aerated 0 %)

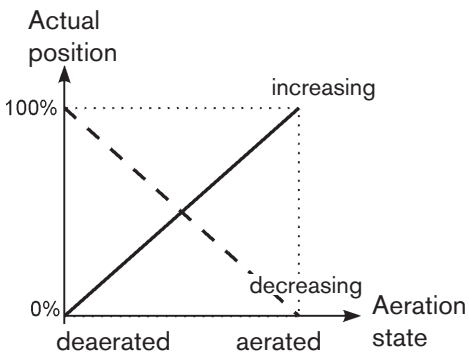

Figure 53: DIR.ACTUATOR graph

MAN 1000329139 EN Version: E Status: RL (released | freigegeben) printed: 23.07.2026

valvesgo.com

13.2.2 *SPLITRANGE* - Signal split range

Minimum and maximum values of the input signal as a % for which the valve runs through the entire stroke range.

Factory setting: Lower signal range split = 0 %; Upper signal range split = 100 %

Lower value split range:	Input the minimum value of the input signal as a % Adjustment range: 0 – 75 %
Upper value split range:	Input the maximum value of the input signal as a % Adjustment range: 25 – 100 %

Use this function to limit the position set-point value range of the positioner by specifying a minimum and a maximum value. This makes it possible to divide a unit signal range that is used (4 – 20 mA, 0 – 20 mA) into several positioners (without or with overlapping). This allows several valves to be used alternately or, in the case of overlapping set-point value ranges, simultaneously as actuators.

To split a unit signal range into two set-point value ranges:

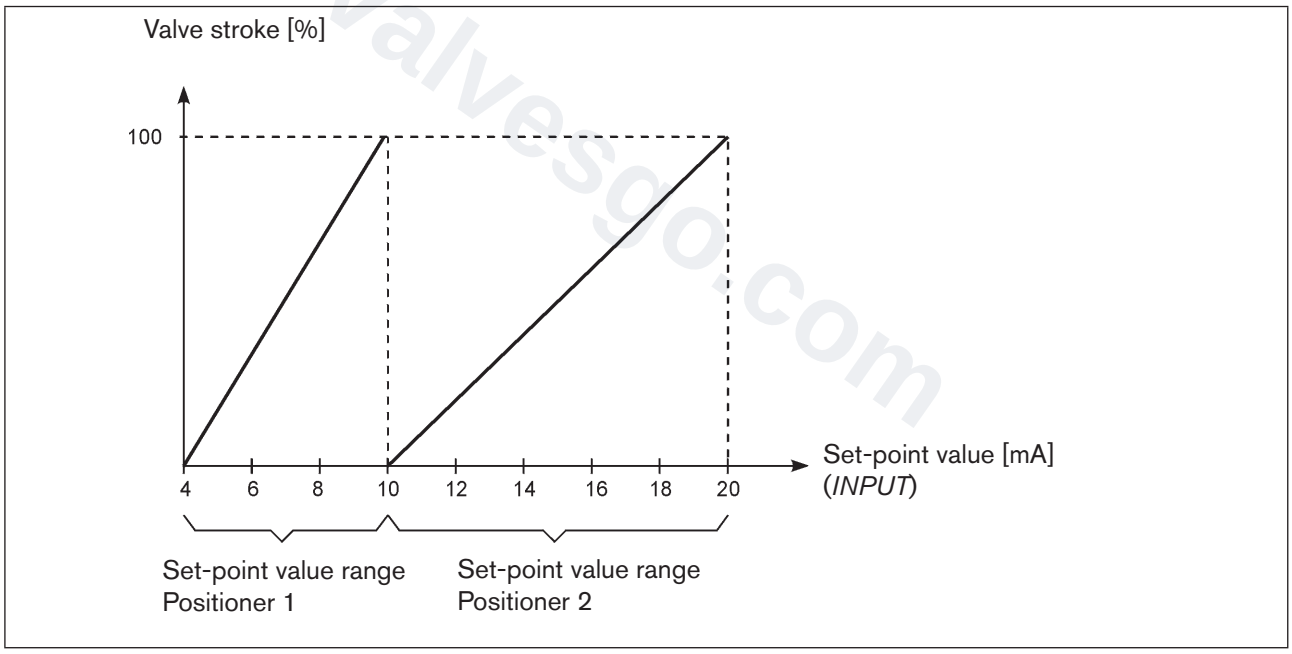

Figure 54: SPLTRNG graph

MAN 1000329139 EN Version: E Status: RL (released | freigegeben) printed: 23.07.2026

valvesgo.com

13.2.3 *X.LIMIT* - Limiting the mechanical stroke range

This function limits the (physical) stroke to specified % values (lower and upper). In doing so, the stroke range of the limited stroke is set equal to 100 %. If the limited stroke range is left during operation, negative actual positions or actual positions greater than 100 % are shown.

Factory setting: Lower position limit = 0 %, upper position limit = 100 %

Adjustment ranges:

Lower position limit: 0 – 50 % of the entire stroke

Upper position limit: 50 – 100 % of the entire stroke

The minimum distance between the upper and lower stroke limit is 50 %. Therefore if one value is entered with a minimum distance of < 50 % the other value is adjusted automatically.

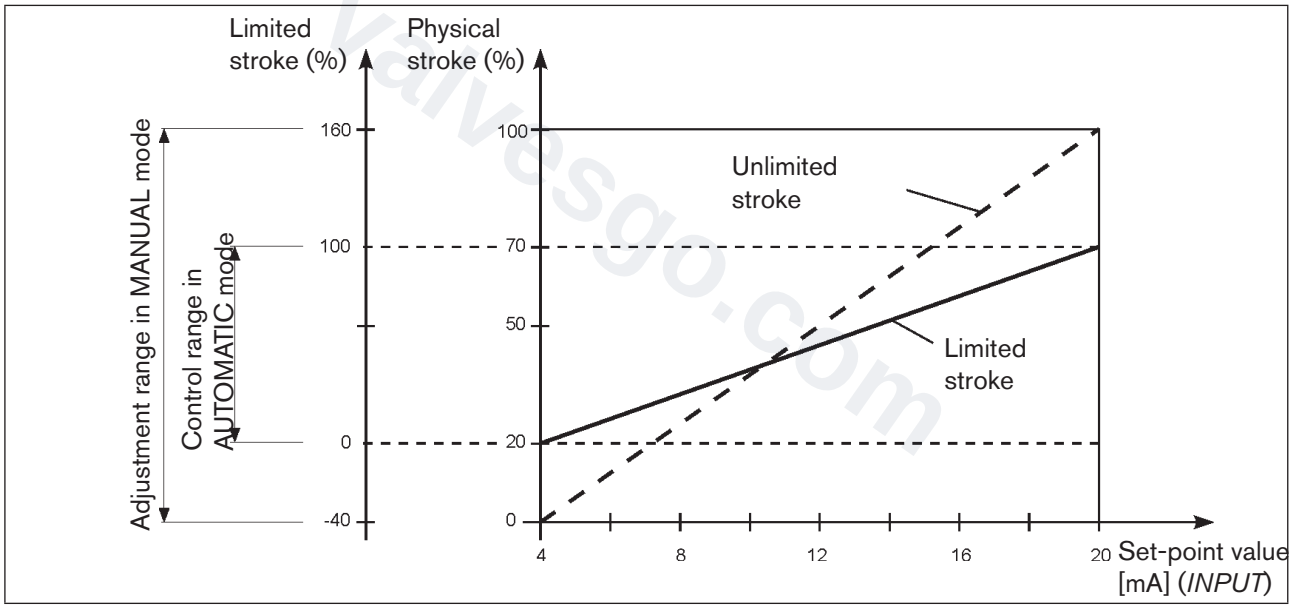

Figure 55: X.LIMIT graph

MAN 1000329139 EN Version: E Status: RL (released | freigegeben) printed: 23.07.2026

13.2.4 *X.TIME* - Limiting the control speed

Use this function to specify the opening and closing times for the entire stroke and thereby limit control speeds.

When the *X.TUNE* function is running, the minimum opening and closing time for the entire stroke is automatically entered for Open and Close. Therefore, movement can be at maximum speed.

Factory setting: values determined at the factory by the *X.TUNE* function

If the control speed will be limited, values can be input for Open and Close which are between the minimum values determined by the *X.TUNE* and 60 seconds.

Valve timeopen: Opening time for entire stroke (in seconds)
Adjustment range: 1 – 60 seconds

Valve timeclose: Closing time for entire stroke (in seconds)
Adjustment range: 1 – 60 seconds

Effect of limiting the opening speed when there is a jump in the set-point value

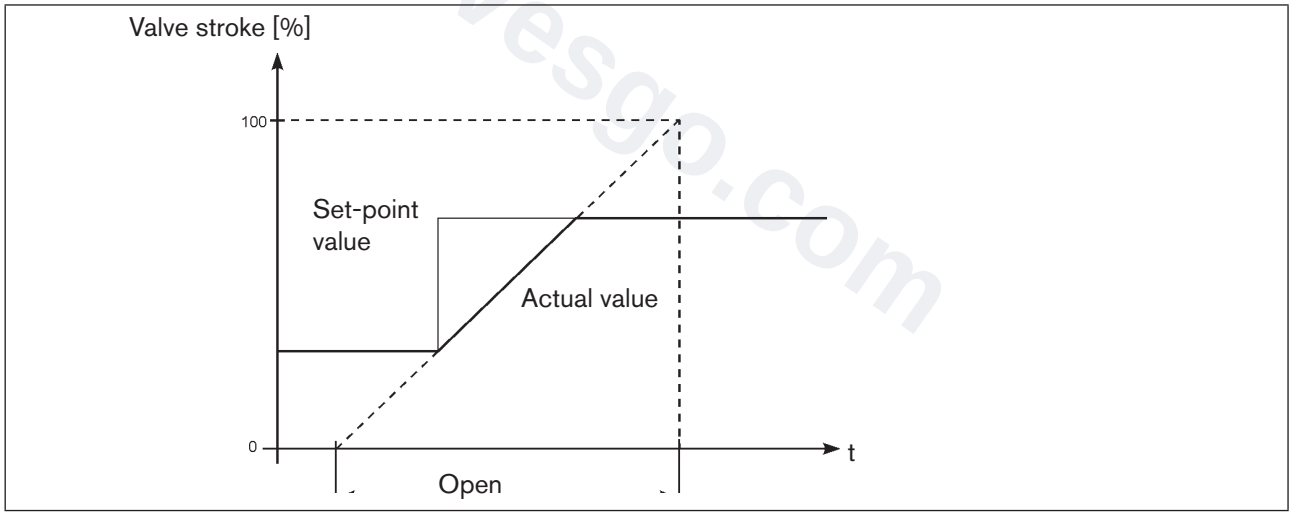

Figure 56: X.TIME graph

MAN 1000329139 EN Version: E Status: RL (released | freigegeben) printed: 23.07.2026

valvesgo.com

13.2.5 *X.CONTROL* - Parameterization of the positioner

Use this function to set the parameters for the positioner (dead band and amplification factors (kp)).

Deadband: Insensitivity range of the positioner

Entry for the deadband as a % in reference to the scaled stroke range;
i.e. X.LIMIT upper stroke limit - X.LIMIT lower stroke (see auxiliary function *X.LIMIT*).

This function causes the controller to respond only beginning at a specific control difference. This function saves wear on the solenoid valves in the positioner and the pneumatic actuator.

If the auxiliary function *X.CONTROL* is in the main menu while *X.TUNE* (Autotune of the positioner) is running, the deadband is determined automatically depending on the friction behavior of the actuator drive. The value determined in this way is an approximate value. You can re-adjust it manually.

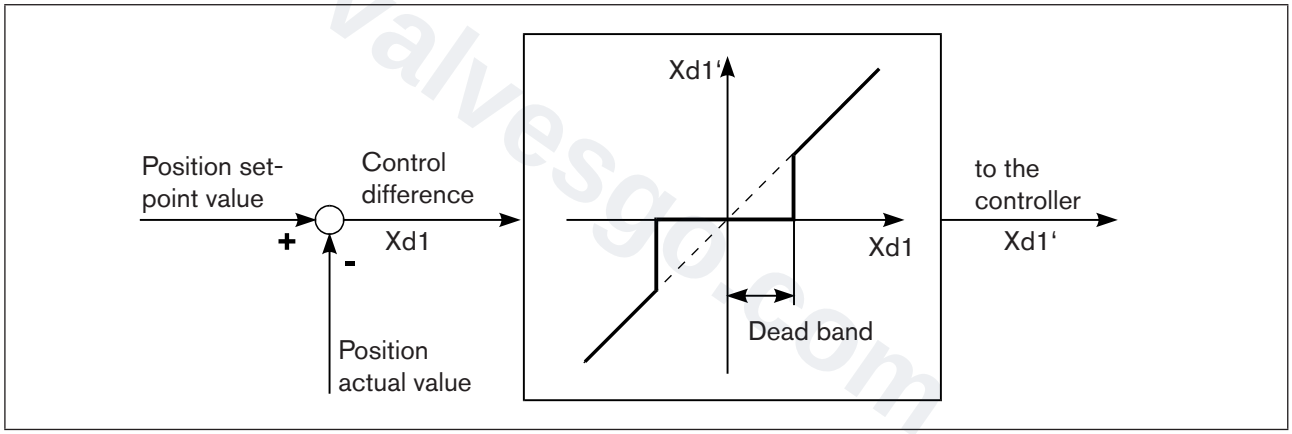

Figure 57: X.CONTROL graph

Open/close amplification factor: Parameters for the positioner

Open amplification factor: Amplification factor of the positioner (for closing the valve)

Close amplification factor: Amplification factor of the positioner (for opening the valve)

13.2.6 *SAFE POSITION* - Definition of the safe position

This function specifies the actuator safety position which is approached at defined signals.

The set safety position is only approached if there is a corresponding signal at the binary input (for configuration see *BINARY INPUT*) or if a signal error occurs (for configuration see *SIGNAL ERROR*).
If the mechanical stroke range is limited with the *X.LIMIT* function, only safety positions within these limits can be approached.
This function is executed in AUTOMATIC mode only.

MAN 1000329139 EN Version: E Status: RL (released | freigegeben) printed: 23.07.2026

valvesgo.com

13.2.7 *SIGNAL ERROR* - Configuration of signal level fault detection

The *SIGNAL ERROR* function is used to detect a fault on the input signal.

> Fault detection
> Fault detection can be selected for a 4 – 20 mA signal only:
> Fault if input signal ≤ 3.5 mA (± 0.5 % of final value, hysteresis 0.5 % of final value)
>
> If 0 – 20 mA is selected, sensor break detection cannot be selected.

A signal error is indicated on the device by the red LED for “setpoint error detection” ON.

Safety position for sensor break ON:

The following configurations can occur with “safety position if setpoint error” ON:

Active *SAFE POSITION*
If a fault is detected, the drive moves to the lower *SAFE POSITION* set position.

Inactive *SAFE POSITION*
If a fault is detected, the drive moves to the end position which it would assume in the isolated state.

13.2.8 *BINARY INPUT* - Activation of the binary input

This function activates the binary input.

The following settings can be implemented for this:

- Approach the safety position
- Switching over the MANUAL/AUTOMATIC operating mode
- Starting the function *X.TUNE* (standard valid since software version A.20, with rotary actuator valid since software version A.02).

Safety position

Approach the safety position.

Active *SAFE POSITION* function
the drive moves to the lower *SAFE POSITION* set position.

Inactive *SAFE POSITION*
The drive moves to the end position which it would assume in the isolated state.

Switch over the operating state to MANUAL or AUTOMATIC.

Binary input = 0 → AUTOMATIC operating state

Binary input = 1 → MANUAL operating state

If switching over the operating mode is selected, you can no longer switch the operating mode with DIP switch 4

Starting the function *X.TUNE*

Binary input = 1 → Starting *X.TUNE*.

MAN 1000329139 EN Version: E Status: RL (released | freigegeben) printed: 23.07.2026

valvesgo.com

13.2.9 *OUTPUT* (optional) - Configuration of the analog output

The OUTPUT menu item only appears in the selection of auxiliary functions if the positioner has an analog output (optional) or if no parameters have been read in yet.

The analog output can be used for feedback of the current position or of the set-point value to the control center.

Standard signal output: parameter	Position Set-point value	Output of the current position Output of the set-point value
Standard signal output: type	4 – 20 mA 0 – 20 mA	Selection of the unit signal

valvesgo.com

MAN 1000329139 EN Version: E Status: RL (released | freigegeben) printed: 23.07.2026

14 SAFETY END POSITIONS

14.1 Safety end positions after failure of the electrical or pneumatic auxiliary power

Actuator system	Designation	Safety end positions after failure of the auxiliary power	
		electrical	**pneumatic**
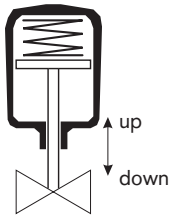	single-acting Control function A	down	pilot-controlled control system: down direct-acting control system: not defined
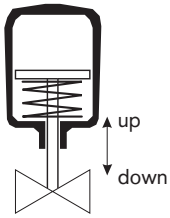	single-acting Control function B	up	pilot-controlled control system: up direct-acting control system: not defined

Table 33: Safety end positions

valvesgo.com

MAN 1000329139 EN Version: E Status: RL (released | freigegeben) printed: 23.07.2026

15 MAINTENANCE

15.1 Safety instructions

DANGER!

Risk of injury from high pressure in the equipment/device.

- Before working on equipment or device, switch off the pressure and deaerate/drain lines.

Risk of electric shock.

- Before working on equipment or device, switch off the power supply and secure to prevent reactivation.
- Observe applicable accident prevention and safety regulations for electrical equipment.

WARNING!

Risk of injury from improper maintenance.

- Maintenance may be performed by authorised technicians only.

Risk of injury from unintentional activation of the system and an uncontrolled restart.

- Secure system from unintentional activation.
- Following maintenance, ensure a controlled restart.

valvesgo.com

MAN 1000329139 EN Version: E Status: RL (released | freigegeben) printed: 23.07.2026

15.2 Service at the air intake filter

DANGER!

Risk of injury from high pressure in the equipment/device.

- Before working on equipment or device, switch off the pressure and deaerate/drain lines.

To protect the internal solenoid valves and the actuator, the pilot air is filtered.

The direction of flow of the air intake filter in installed state is from the inside to the outside through the filter material.

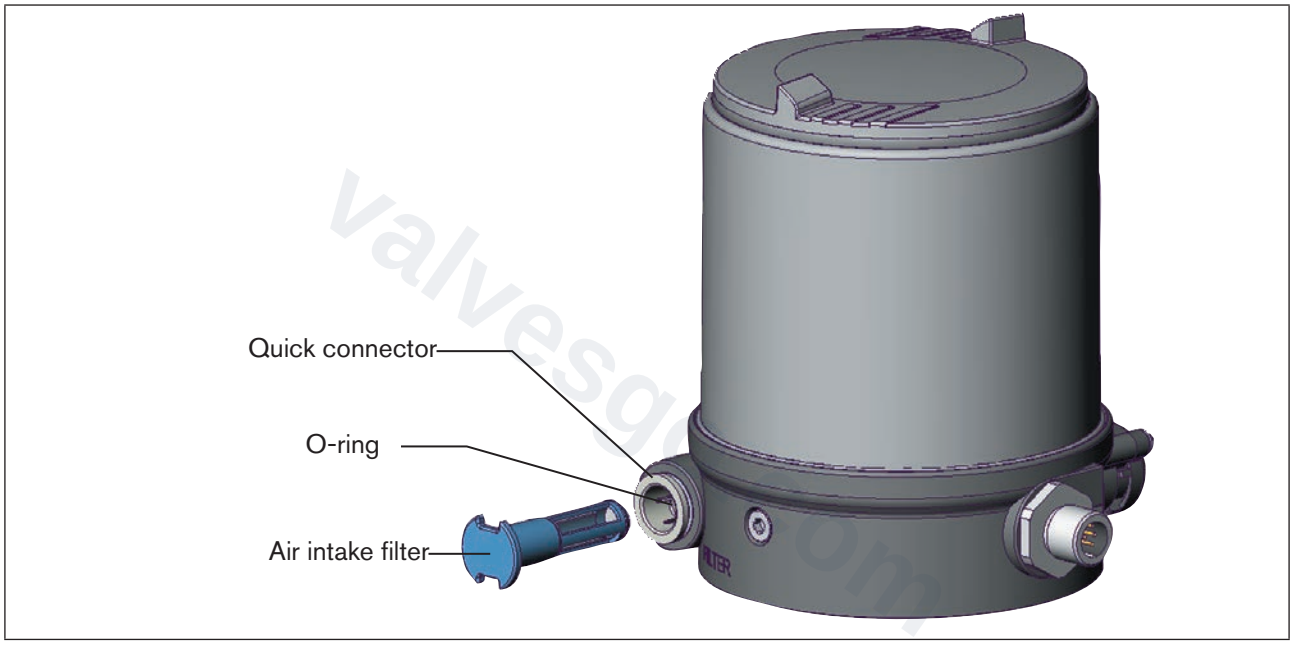

Figure 58: Service on the air intake filter

Procedure:

→ Unlock the quick connector by pressing the holding element and pulling out the air intake filter (if necessary, use a suitable tool in between the recesses in the head of the filter).

→ Clean the filter or, if necessary, replace the filter.

→ Check inner O-ring and, if required, clean.

→ Insert the air intake filter all the way into the quick connector.

DANGER!

Risk of injury due to improper installation.

- Ensure that the air intake filter is installed correctly.

→ Check that the air intake filter is secure.

MAN 1000329139 EN Version: E Status: RL (released | freigegeben) printed: 23.07.2026

valvesgo.com

16 ACCESSORIES

Designation	Order no.
USB adapter for connection to a PC in conjunction with an extension cable	227093
Communicator	Information at www.burkert.com
Connection cable M12 x 1, 8-pole	919061
Assembly tool	647077

Table 34: Accessories

16.1 Communications software

The PC operating program “Communicator” is designed for communication with the devices from the Bürkert positioner family (valid since serial number 20000).

A detailed description and precise schedule of the procedure for the installation and operation of the software can be found in the associated documentation.

16.1.1 USB interface

The PC requires an USB interface for communication with the positioners as well as an additional adapter with interface driver (see “Table 34: Accessories”).

The data transfer must be according to HART specification.

16.1.2 Download

Download the software at: www.burkert.com

MAN 1000329139 EN Version: E Status: RL (released | freigegeben) printed: 23.07.2026

valvesgo.com

17 DISASSEMBLY

17.1 Safety instructions

DANGER!

Risk of injury from high pressure in the equipment/device.

- Before working on equipment or device, switch off the pressure and deaerate/drain lines.

Risk of electric shock.

- Before working on equipment or device, switch off the power supply and secure to prevent reactivation.
- Observe applicable accident prevention and safety regulations for electrical equipment.

WARNING!

Risk of injury from improper disassembly.

- Disassembly may be carried out by authorized technicians only and with the appropriate tools.

Risk of injury from unintentional activation of the system and an uncontrolled restart.

- Secure system from unintentional activation.
- Following disassembly, ensure a controlled restart.

valvesgo.com

17.2 Disassembly the positioner

Procedure:

1. Pneumatic connection

DANGER!

Risk of injury from high pressure in the equipment/device.

- Before working on equipment or device, switch off the pressure and deaerate/drain lines.

→ Loosen the pneumatic connection.

→ Series 20xx:
Loosen the pneumatic connection between positioner and actuator.

MAN 1000329139 EN Version: E Status: RL (released | freigegeben) printed: 23.07.2026

valvesgo.com

2. Electrical connection

DANGER!

Risk of electric shock.

- Before working on equipment or device, switch off the power supply and secure to prevent reactivation.
- Observe applicable accident prevention and safety regulations for electrical equipment.

Circular plug-in connector:

→ Loosen the circular plug-in connector.

Cable gland:

→ Open the positioner: unscrewing the body casing in an anticlockwise direction.

→ Unscrew the screw terminals and pull out cables.

→ Close the positioner.

3. Mechanical connection

→ Loosen the fastening screws.

→ Remove the positioner upwards.

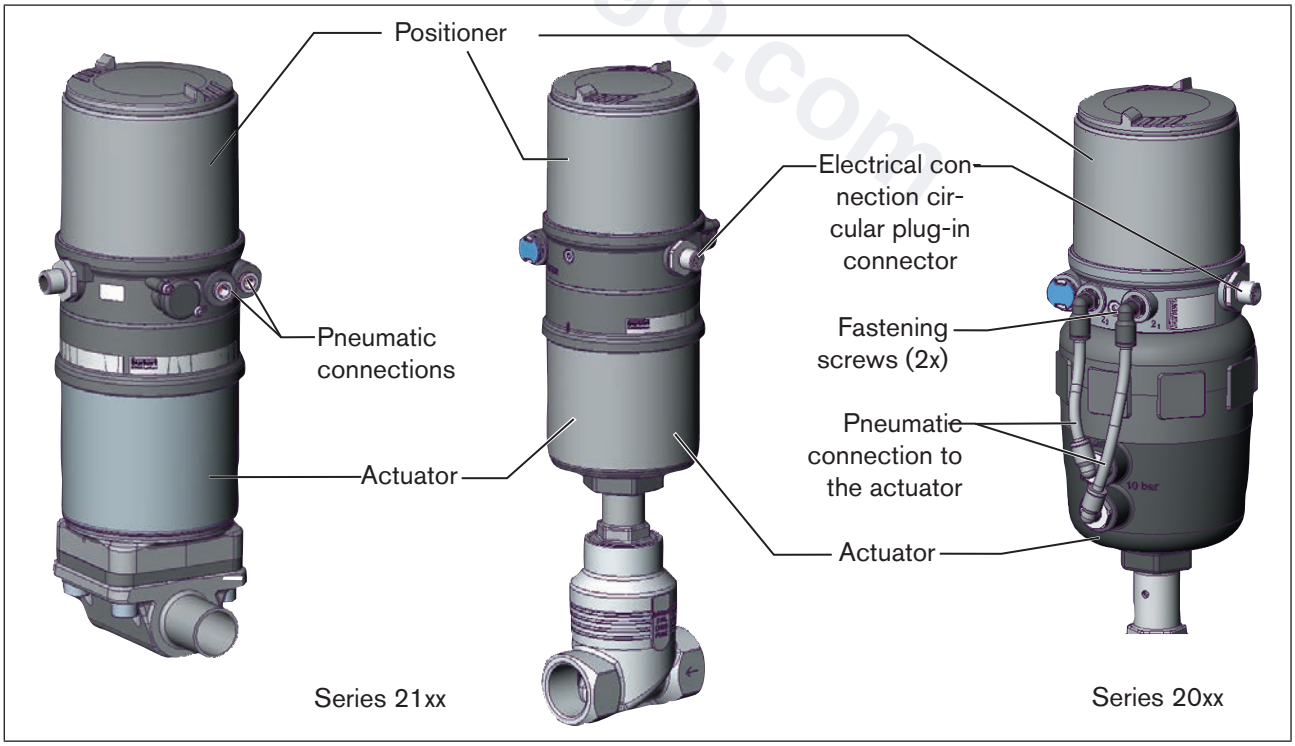

Figure 59: Disassembly the positioner

MAN 1000329139 EN Version: E Status: RL (released | freigegeben) printed: 23.07.2026

valvesgo.com

18 PACKAGING AND TRANSPORT

NOTE!

Transport damages.

Inadequately protected equipment may be damaged during transport.

- During transportation protect the device against wet and dirt in shock-resistant packaging.
- Avoid the effects of heat and cold which could result in temperatures above or below the permitted storage temperature.

19 STORAGE

NOTE!

Incorrect storage may damage the device.

- Store the device in a dry and dust-free location.
- Storage temperature -20 – +65°C.

20 DISPOSAL

→ Dispose of the device and packaging in an environmentally friendly manner.

NOTE!

Damage to the environment caused by device components contaminated with media.

- Observe the relevant disposal and environmental protection regulations.

Observe national waste disposal regulations.

MAN 1000329139 EN Version: E Status: RL (released | freigegeben) printed: 23.07.2026

valvesgo.com

MAN 1000329139 EN Version: E Status: RL (released | freigegeben) printed: 23.07.2026

valvesgo.com

bürkert
FLUID CONTROL SYSTEMS

MAN 1000329139 EN Version: E Status: RL (released | freigegeben) printed: 23.07.2026

valvesgo.com

www.burkert.com