bürkert
FLUID CONTROL SYSTEMS

Servo-assisted 2/2-way diaphragm valve

- Servo-assisted diaphragm valve up to DN 50
- Fix-coupled diaphragm opens without differential pressure
- Vibration-proof, block screwed coil system
- Energy-saving power reduction for all DC variants

Product variants described in the data sheet may differ from the product presentation and description.

Can be combined with

Type 2518
Cable plug,
form A according to
DIN EN 175301-803

Type 1087
Timer,
form A according to
DIN EN 175301-803

Type description

Valve 0290 is a servo-assisted diaphragm valve. The valve opens without differential pressure. The opening process is facilitated by the fix-coupling of the diaphragm to the magnetic core. The integrated ‘soft-kick’ function ensures gentle opening. Various diaphragm materials are available depending on the actual application. The range includes variants with a stainless steel body. The solenoid coils are moulded with an epoxy that has a high level of chemical resistance. Kick and drop electronics are moulded into all DC solenoid variants for reduced electrical power consumption.

valvesgo.com

DTS 1000010824 EN Version: - Status: RL (released | freigegeben | valide) printed: 05.10.2026

© Christian Bürkert GmbH & Co. KG, Subject to alteration

valvesgo.com

Table of contents

1. General technical data 3

2. Circuit functions 4

3. Approvals and conformities 4

3.1. General notes 4
3.2. Conformity 4
3.3. Standards 4
3.4. North America (USA/Canada) 4
3.5. Drinking water 4
3.6. Others 5
Fuel gases 5

4. Materials 5

4.1. Bürkert resistApp 5
4.2. Material specifications 5

5. Dimensions 6

5.1. Threaded variant 6
5.2. Flange variant according to DIN EN 1092 - 1 7

6. Performance specifications 7

6.1. Power consumption 7
Standard variant 7
Gas valve according to DIN EN 161 (variable code PO17) 7

7. Ordering information 8

7.1. Bürkert eShop 8
7.2. Bürkert product filter 8
7.3. Bürkert Product Enquiry Form 8
7.4. Ordering chart 9
Standard variant with brass body 9
Standard variant with stainless steel body 9
Gas valve according to DIN EN 161 (variable code PO17) 10
7.5. Ordering chart accessories 10
Cable plug Type 2518, form A according to DIN EN 175301 - 803 10
Timer Type 1087, form A according to DIN EN 175301 - 803 11

DTS 1000010824 EN Version: - Status: RL (released | freigegeben | valide) printed: 05.10.2026

valvesgo.com

valvesgo.com

1. General technical data

Product properties	
Dimensions	Further information can be found in chapter "5. Dimensions" on page 6.
Material	
Seal	NBR, FKM, EPDM
Body	Brass, stainless steel 1.4581
Coil	Epoxy
Valve inner parts	Brass, stainless steel
Orifice	
Standard variant	DN 12...DN 50
With approval according to DIN EN 161	DN 12...DN 25
Circuit function	A Further information can be found in chapter "2. Circuit functions" on page 4.
Thermal insulation class of solenoid coil	Epoxy coil class H
Performance data	
Duty cycle	100 % continuous operation (unless otherwise specified on the type plate)
Switching time [1.) 2.)]	
DN 12...DN 25	Opening: 100...250 ms Closing: 700...2000 ms
DN 32...DN 65	Opening: 300...1000 ms Closing: 700...4000 ms
DN 12...DN 25 with approval according to DIN EN 161	Opening: 120...150 ms Closing: 130...250 ms
Electrical data	
Voltage	24 V 50 Hz, 24 V DC, 24 V UC, 110 V 50 Hz, 230 V 50 Hz
Voltage tolerance	± 10 %
Medium data	
Operating medium	
With NBR	Neutral gases and liquids (e.g. compressed air, water, hydraulic oil, oils without additives)
With FKM	Per solutions, hot oils with additives
With EPDM	Oil-free and fat-free media, (e.g. hot water)
With NBR with approval according to DIN EN 161	Fuel gases of the 1st, 2nd and 3rd gas family
Medium temperature [3.)]	
With NBR	- 10 °C...+ 80 °C
With FKM	0 °C...+ 120 °C
With EPDM	- 30 °C...+ 100 °C
With NBR with approval according to DIN EN 161	0 °C...+ 80 °C
Product connections	
Electrical connection	Plug contacts according to DIN EN 175 301 - 803 form A for cable plug **Type 2518** ▶. Further information can be found in chapter "Cable plug Type 2518, form A according to DIN EN 175301 - 803" on page 10.
Approvals and certificates	
Degree of protection	IP65 with cable plug
North America (USA/Canada)	Further information can be found in chapter "3.4. North America (USA/Canada)" on page 4.
Drinking water	Further information can be found in chapter "3.5. Drinking water" on page 4.
Others	Further information can be found in chapter "3.6. Others" on page 5.
Environment and installation	
Installation position	As required, preferably with actuator upright
Ambient temperature	
Standard variant[4.)]	Max. + 55 °C
With approval according to DIN EN 161	0 °C to + 55 °C

1.) Measurement at + 20 °C, 6 bar at the valve outlet, opening: pressure build-up 0...90 %, closing: pressure reduction 100...10 %

2.) For variants with high-performance electronics max. 6 switching cycles per minute. For switching cycles exceeding this limit, please request technical advice if necessary.

DTS 1000010824 EN Version: - Status: RL (released | freigegeben | valide) printed: 05.10.2026

valvesgo.com

3.) Max. medium temperature for variants with high-performance electronics (encoding .../UC) is + 90 °C.
4.) For variants with high-performance electronics up to + 70 °C is possible depending on the number of switching cycles. Please request technical advice if necessary.

2. Circuit functions

Symbol	Description
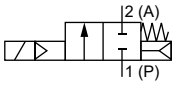	**Circuit function A (CF A)** 2/2-way solenoid valve Servo-controlled Normally closed

3. Approvals and conformities

3.1. General notes

- The approvals and conformities listed below must be stated when making enquiries. This is the only way to ensure that the product complies with all required specifications.
- Not all available variants can be supplied with the below mentioned approvals or conformities.

3.2. Conformity

In accordance with the Declaration of Conformity, the product is compliant with the EU Directives.

3.3. Standards

The applied standards which are used to demonstrate compliance with the EU Directives are listed in the EU-Type Examination Certificate and/or the EU Declaration of Conformity.

3.4. North America (USA/Canada)

Approval	Description
UL LISTED	**Optional: UL Listed for the USA** The products are UL Listed for the USA according to: • UL 429 (electrically operated valves)
	Optional: UL Recognized for the USA The products are UL Recognized for the USA according to: • UL 429 (electrically operated valves)
	Optional: CSA for Canada The products are CSA approved for Canada according to: • CAN/CSA-C22.2 No. 139 - 19 (electrically operated valves)

3.5. Drinking water

Conformity	Description
H_2O	**Suitable for use in drinking water applications** The materials comply with the assessment principles (UBA) for materials in contact with drinking water (Trinkwas-serV). PF36: Suitable for products with a maximum temperature of + 60 °C (warm water)
	Suitable for use in drinking water applications with WRAS/WRC approval PD23: Sealing materials with WRAS/WRC approval for DN 12...DN 25

DTS 1000010824 EN Version: - Status: RL (released | freigegeben | valide) printed: 05.10.2026

valvesgo.com

3.6. Others

Fuel gases

Conformity	Description
CE	**Fuel gases (valid for the variable code PO17)** The products comply with: • Regulation (EU) 2016/426 – Appliances burning gaseous fuels and • DVGW DIN EN 161 (Automatic shut-off valves for gas burners and gas appliances)
DVGW	**Optional: DIN EN 549:2023-07 certification** The wetted valve seals are compliant with DIN EN 549:2023-07 (Rubber materials for seals and diaphragms for gas appliances and gas equipment) for medium temperatures of 0 °C...+ 80 °C.

4. Materials

4.1. Bürkert resistApp

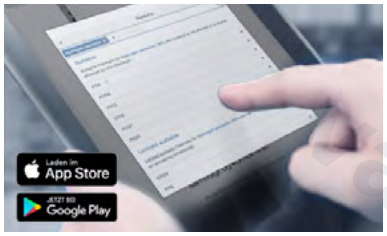

Bürkert resistApp – Chemical resistance chart

You want to ensure the reliability and durability of the materials in your individual application case? Verify your combination of media and materials on our website or in our resistApp.

Start chemical resistance check

4.2. Material specifications

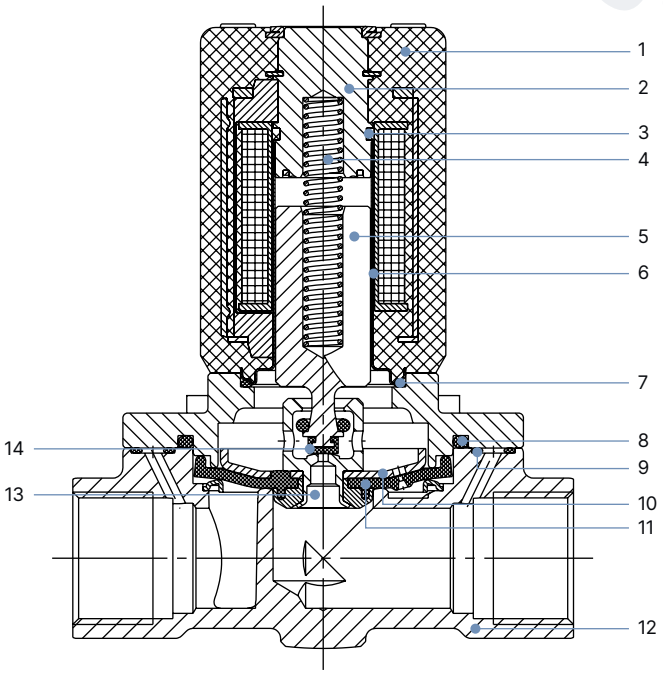

No.	Element	Material
1	Coil	Epoxy
2	Stopper	Stainless steel 1.4105, 1.4113 or 1.4523 (optional)
3	Shading ring (AC variant only)	Brass variant: copper Stainless steel variant: silver
4	Spring	Stainless steel 1.4310
5	Magnetic core	Stainless steel 1.4105 or 1.4113
6	Core guide tube	Stainless steel 1.4303
7	O-ring	NBR, FKM, EPDM
8	O-ring	NBR, FKM, EPDM
9	O-ring	NBR, FKM, EPDM
10	Diaphragm plate	Brass variant: CuZn37 Stainless steel variant: 1.4401
11	Diaphragm	NBR, FKM, EPDM
12	Body	Brass or stainless steel 1.4581
13	Pilot valve seat	Brass variant: MS Stainless steel variant: 1.4401
14	Seat seal	NBR, FKM, EPDM

DTS 1000010824 EN Version: - Status: RL (released | freigegeben | valide) printed: 05.10.2026

valvesgo.com

5. Dimensions

5.1. Threaded variant

Note:

- Dimensions in mm
- The dimensions D1 and F1 apply to G thread.
- The dimensions D2 and F2 apply to NPT thread.

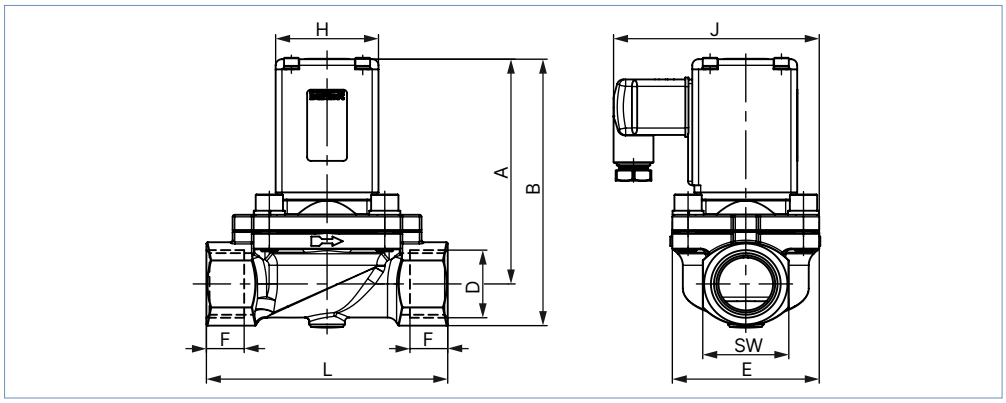

DN	A	B	G		NPT		E	L	SW	J	H
			D1	F1	D2	F2					
12	80	94	G ½	14	NPT ½	13.7	40	74.5	27	81	40
20	106	122	G ¾	16	NPT ¾	14	60	100	32	93	49
25	110.5	131	G 1	18	NPT 1	16.8	70	115	41	98	49
32	120	145	G 1¼	20	NPT 1¼	17.3	85	126	50	106	49
40	124	154	G 1½	22	NPT 1½	17.3	85	126	60	106	49
50	176	211	G 2	24	NPT 2	17.6	115	164	70	133	72
65	176	218.5	G 2½	27	NPT 2½	23.6	115	179	85	133	72

DTS 1000010824 EN Version: - Status: RL (released | freigegeben | valide) printed: 05.10.2026

valvesgo.com

5.2. Flange variant according to DIN EN 1092 - 1

Note:

- Dimensions in mm
- Flange variants are available on request.

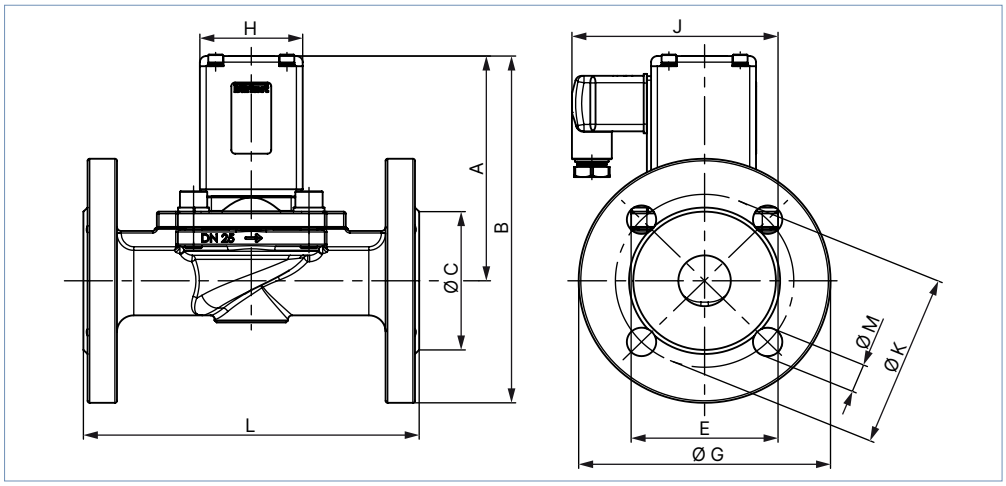

DN	A	B	C	E	Ø G	L	M	K	J	H
25	110.5	170.5	68	70	120	160	14	85	98	49
32	120	190	78	85	140	180	18	100	106	49
40	126	201	88	85	150	200	18	110	106	49
50	176	258.5	102	115	165	230	18	125	133	72

6. Performance specifications

6.1. Power consumption

Standard variant

Orifice	K_V value water P→A	Port connection A/B and P	Electrical power consumption				Weight
			Inrush power		Holding power		
			AC	AC/DC [1.)]	AC	AC/DC [1.)]	
[mm]	[m³/h]		[VA]	[W]	[VA/W]	[W]	[kg]
12	1.8	G ½	100	80	25/10	6	1.0
20	6.5	G ¾	120	100	32/16	9	1.4
25	10.0	G 1	120	100	32/16	9	1.8
32	16.0	G 1¼	120	100	32/16	9	2.7
40	16.0	G 1½	120	100	32/16	9	3.1
50	38.0	G 2	–	30 [1.)]	–	30	6.5

1.) The coil with Kick and Drop electronics is an universal current coil (frequency coding: UC) that is suitable for AC and DC.
2.) With 24 V only DC

Gas valve according to DIN EN 161 (variable code PO17)

Orifice	K_V value water P→A	Port connection A/B and P	Electrical power consumption				Weight
			Inrush power		Holding power		
			AC	AC/DC [1.)]	AC	AC/DC [1.)]	
[mm]	[m³/h]		[VA]	[W]	[VA/W]	[W]	[kg]
12	1.8	G ½	100 to 120	80	25/10	6	1.0
20	6.5	G ¾		100	32/16	9	1.4
25	10.0	G 1		100	32/16	9	1.8

DTS 1000010824 EN Version: - Status: RL (released | freigegeben | valide) printed: 05.10.2026

valvesgo.com

7. Ordering information

7.1. Bürkert eShop

Bürkert eShop – Easy ordering and quick delivery

You want to find your desired Bürkert product or spare part quickly and order directly? Our online shop is available for you 24/7. Sign up and enjoy all the benefits.

Order online now

7.2. Bürkert product filter

Bürkert product filter – Get quickly to the right product

You want to select products comfortably based on your technical requirements?
Use the Bürkert product filter and find suitable articles for your application quickly and easily.

Try out our product filter

7.3. Bürkert Product Enquiry Form

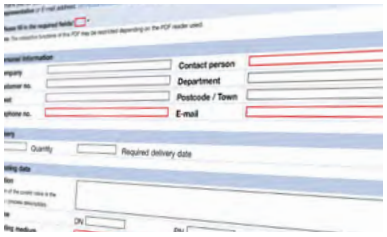

Bürkert Product Enquiry Form – Your enquiry quickly and compactly

Would you like to make a specific product enquiry based on your technical requirements? Use our Product Enquiry Form for this purpose. There you will find all the relevant information for your Bürkert contact. This will enable us to provide you with the best possible advice.

Fill out the form now

DTS 1000010824 EN Version: - Status: RL (released | freigegeben | valide) printed: 05.10.2026

valvesgo.com

7.4. Ordering chart

Standard variant with brass body

Note:
All valves are delivered with a cable plug.

Circuit function	Port connection	Orifice	K_V value water	Pressure range	Weight	Article no.			
						024/50	024 / AC/DC 1.)	230/50	110/50
			[m³/h]	[bar]	[kg]	[V/Hz]	[V/Hz]	[V/Hz]	[V/Hz]
CF A 2/2-way solenoid valve Servo-controlled Normally closed 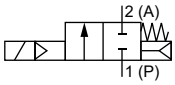	**Seal material NBR**								
	G ½	12	1.8	0...16	0.7	043816	050294	044373	049500
	G ¾	20	6.5	0...16	1.4	058766	049518	045292	057127
	G 1	25	10.0	0...16	1.8	048171	053675	045293	053869
	G 1¼	32	16.0	0...12	2.6	085290	085291	052513	085292
	G 1½	40	16.0	0...12	3.0	085294	085295	085297	085296
	G 2	50	38.0	0...12	6.7	–	085299 3.)	085301 2.)	085300 2.)
	Seal material FKM								
	G ½	12	1.8	0...16	0.7	048707	049229	042886	059240
	G ¾	20	6.5	0...16	1.4	053910	053674	049745	067973
	G 1	25	10.0	0...16	1.8	066270	066981	058627	067974
	G 1¼	32	16.0	0...12	2.6	120631	017457	087203	137478
	G 1½	40	16.0	0...12	3.0	228118	089619	087663	–
	G 2	50	38.0	0...12	6.7	–	120952 3.)	088551 2.)	–
	Seal material EPDM								
	G ½	12	1.8	0...16	0.7	045931	049050	044816	049055
	G ¾	20	6.5	0...16	1.4	065033	058427	045290	069138
	G 1	25	10.0	0...16	1.8	054245	057155	045291	064887
	G 1¼	32	16.0	0...12	2.6	087204	072962	085259	076763
	G 1½	40	16.0	0...12	3.0	073290	079629	087732	–
	G 2	50	38.0	0...12	6.7	–	120104 3.)	077494 2.)	121308 2.)

– = not available
1.) The coil with Kick and Drop electronics is an universal current coil (frequency coding: UC) that is suitable for AC and DC. Make sure that sufficient power is available (see "6. Performance specifications" on page 7).
2.) The valve is supplied with a cable plug with integrated rectifier.
3.) DC only

Standard variant with stainless steel body

Note:
All valves are delivered with a cable plug.

Circuit function	Port connection	Orifice	K_V value water	Pressure range	Weight	Article no. per voltage/frequency			
						024/50	024 / AC/DC 1.)	230/50	110/50
			[m³/h]	[bar]	[kg]	[V/Hz]	[V/Hz]	[V/Hz]	[V/Hz]
CF A 2/2-way solenoid valve Servo-controlled Normally closed 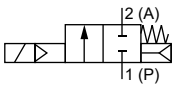	**Seal material NBR**								
	G ½	12	1.8	0...16	0.7	043659	053595	043654	052358
	G ¾	20	6.5	0...16	1.3	068338	018754	065121	–
	G 1	25	10.0	0...16	1.7	068510	061974	065414	067696
	Seal material FKM								
	G ½	12	1.8	0...16	0.7	048708	049987	042888	058407
	G ¾	20	6.5	0...16	1.3	065362	066381	064701	066594
	G 1	25	10.0	0...16	1.7	018121	065542	066125	069477
	Seal material EPDM								
	G ½	12	1.8	0...16	0.7	045765	048606	043553	049053
	G ¾	20	6.5	0...16	1.3	066460	059910	065025	025870
	G 1	25	10.0	0...16	1.7	059890	018348	059901	054044

– = not available
1.) The coil with Kick and Drop electronics is an universal current coil (frequency coding: UC) that is suitable for AC and DC.Make sure that sufficient power is available (see "6. Performance specifications" on page 7).

DTS 1000010824 EN Version: - Status: RL (released | freigegeben | valide) printed: 05.10.2026

valvesgo.com

Gas valve according to DIN EN 161 (variable code PO17)

Note:
All valves are delivered with a cable plug.

Circuit function	Port connection	Orifice	K_V value water	Pressure range	Weight	Article no. per voltage/frequency		
						024 / AC/DC [1.)]	230/50	230 / AC/DC [1.)]
			[m³/h]	[bar]	[kg]	[V/Hz]	[V/Hz]	[V/Hz]
CF A 2/2-way solenoid valve Servo-controlled Normally closed 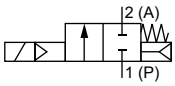	**Seal material NBR**							
	G ½	12	1.8	0...5	0.7	280855	266512	281001
	G ¾	20	6.5		1.4	280877	266513	280878
	G 1	25	10.0		1.8	280879	266515	280880

1.) The coil with Kick and Drop electronics is an universal current coil (frequency coding: UC) that is suitable for AC and DC. Make sure that sufficient power is available (see "6. Performance specifications" on page 7).

Further variants on request

Approval
Further information can be found in chapter "3. Approvals and conformities" on page 4.

Voltage
Further voltages on request

Process connection
Flange connection according to DIN EN 1092 - 1
(DN 25...DN 50)

7.5. Ordering chart accessories

Cable plug Type 2518, form A according to DIN EN 175301 - 803

Note:
- Dimensions in mm
- For further variants see data sheet **Type 2518** ▶.

Cable plug	Dimensions	Variant	Voltage	Article no.
	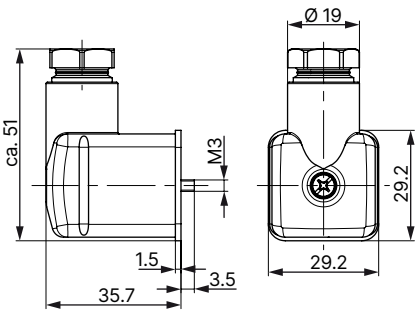	Without wiring (AC/DC)	0...250 V AC/DC	314802
		With LED (AC/DC)	12...24 V AC/DC	314812
		With LED and varistor (AC/DC)	12...24 V AC/DC	314820
		With rectifier, LED and varistor	12...24 V AC/DC	314816
		Without wiring (AC/DC) with silicone seal for higher ambient temperature, e.g. steam variant (NA07)	0...250 V AC/DC	361687

DTS 1000010824 EN Version: - Status: RL (released | freigegeben | valide) printed: 05.10.2026

valvesgo.com

Timer Type 1087, form A according to DIN EN 175301 - 803

Note:
Refer to data sheet **Type 1087** ▶ for more information about the timer.

Timer	Approval	Product code	Voltage range	Article no.
Analogue variant	–	1087-A-BCH-UC - 28	10...30 V AC/DC	348828
	–	1087-A-BDK-UC - 28	24...240 V AC/DC	348829
	cURus	1087-A-BCH-UC- 28*PU01	10...30 V AC/DC	348906
	cURus	1087-A-BDK-UC- 28*PU01	24...240 V AC/DC	348907
Digital variant	–	1087-A-BFW-UC - 29	10...48 V AC/DC	348830
	–	1087-A-BDX-UC - 29	110...240 V AC/DC	348831
	cURus	1087-A-BFW-UC- 29*PU01	10...48 V AC/DC	348908
	cURus	1087-A-BDX-UC- 29*PU01	110...240 V AC/DC	348909

DTS 1000010824 EN Version: - Status: RL (released | freigegeben | valide) printed: 05.10.2026

valvesgo.com

valvesgo.com