bürkert
FLUID CONTROL SYSTEMS

MAN 1000310733 EN Version: C Status: RL (released | freigegeben) printed: 13.10.2026

Type 0290

2/2-way solenoid valve

Operating Instructions

valvesgo.com

MAN 1000310733 EN Version: C Status: RL (released | freigegeben) printed: 13.10.2026

valvesgo.com

We reserve the right to make technical changes without notice.
© Bürkert Werke GmbH & Co. KG 2013 - 2025
Technical documentation 2511/11_GBen_00893124_1023746187_1023938443 / Original DE

Table of contents

1 About this document 4
1.1 Symbols 4
1.2 Terms and abbreviations 5
1.3 Manufacturer 5
2 Safety 6
2.1 Intended use 6
2.2 Basic safety instructions 6
3 Technical data 8
3.1 Standards and directives 8
3.2 Operating conditions 8
3.3 Type label 11
4 Installation 12
4.1 Safety instructions 12
4.2 Before installation 12
4.3 Installation 13
4.4 Electrical installation 13
5 Maintenance, troubleshooting 15
5.1 Safety instructions 15
5.2 Troubleshooting 15
6 Spare parts 16
6.1 Ordering spare parts 16
7 Logistics 17
7.1 Transport and storage 17
7.2 Return 17
7.3 Disposal 17

MAN 1000310733 EN Version: C Status: RL (released | freigegeben) printed: 13.10.2026

valvesgo.com

valvesgo.com

1 About this document

The document is an important part of the product and guides the user to safe installation and operation. The information and instructions in this document are binding for the use of the product.

- Before using the product for the first time, read and observe the whole safety chapter.
- Before starting any work on the product, read and observe the respective sections of the document.
- Keep the document available for reference and give it to the next user.
- Contact the Bürkert sales office for any questions.

Further information concerning the product at Products.

- Enter the article number from the type label in the search bar.

The illustrations in these instructions may vary depending on the product variant.

1.1 Symbols

DANGER!

Warns of a danger that leads to death or serious injuries.

WARNING!

Warns of a danger that can lead to death or serious injuries.

CAUTION!

Warns of a danger that can lead to minor injuries.

NOTICE!

Warns of property damage on the product or the installation.

Indicates important additional information, tips and recommendations.

Refers to information in this document or in other documents.

- Indicates a step to be carried out.

✓ Indicates a result.

Menu Indicates a software user-interface text.

MAN 1000310733 EN Version: C Status: RL (released | freigegeben) printed: 13.10.2026

valvesgo.com

1.2 Terms and abbreviations

The terms and abbreviations are used in this document to refer to following definitions.

Product	Solenoid valve type 0290

1.3 Manufacturer

Bürkert Fluid Control Systems

Christian-Bürkert-Str. 13–17

74653 Ingelfingen

GERMANY

The contact addresses are available at Contact.

Need more information or additional products?

- Explore the full range of products on our eShop.

valvesgo.com

MAN 1000310733 EN Version: C Status: RL (released | freigegeben) printed: 13.10.2026

valvesgo.com

2 Safety

2.1 Intended use

Improper use of the Type 0290 system may be hazardous to persons, equipment in the vicinity and the environment.

- The device is designed for dosing, blocking, filling and ventilating media.
- With a properly connected and assembled cable plug, e.g. Bürkert Type 2508, the device complies with degree of protection IP65 in accordance with DIN EN 60529/ IEC 60529.
- When using the device, observe the authorised data, and the operating and usage conditions specified in the contract documents and in the operating instructions. These are described in Technical data [▸ 8].
- Use the device only in conjunction with third-party devices and components recommended or approved by Bürkert.
- Prerequisites for safe and trouble-free operation are correct transport, correct storage and installation as well as careful operation and maintenance.
- Only use the device for its intended purpose.

2.2 Basic safety instructions

These safety instructions do not make allowance for any unforeseen circumstances or incidents which may arise during installation, operation and maintenance.

Danger – high pressure

- Before loosening lines or valves, switch off the pressure and drain the lines.

Danger due to electrical voltage

Before accessing the device or the system, switch off the power supply and secure it to prevent reactivation!

Observe the applicable accident prevention and safety regulations for electrical devices.

Risk of burns and fire due to hot device surface if device is operated continuously

- Keep the device away from highly flammable substances and media and do not touch with bare hands.

Risk of injury from malfunctioning valves with alternating current (AC)

A seized core will cause the coil to overheat, which leads to functional failure.

- Monitor the working process for proper function.

Short circuit hazard

Risk of escape of medium due to unsealed fittings

- Make sure valve seats are properly seated.
- Screw valve and connection lines together carefully.

MAN 1000310733 EN Version: C Status: RL (released | freigegeben) printed: 13.10.2026

valvesgo.com

Brief opening of the valve

A sudden increase in pressure when the valve is closed may cause it to open for a short moment.

- If necessary, take protective measures for hazardous media.

General hazardous situations

To prevent injuries, the following must be observed:

- Secure the device against unintentional activation.
- Ensure that only trained technicians carry out installation and maintenance work.
- The device may only be operated in perfect condition and in accordance with the operating instructions.
- Comply with the generally accepted engineering standards.
- In potentially explosive environments, the device must only be used in accordance with the specifications on the separate Ex type label. The additional information and safety instructions relating to Ex areas enclosed with the device must be adhered to when deploying the device.
- The process must be restarted in a defined or controlled manner after an interruption in the power supply or pneumatic supply.

Please observe the following in order to protect against damage to the device:

- Do not subject the device to mechanical loads (e.g. by placing objects on the device to help assembly, as a step or as a lever arm).
- Do not make any external modifications to the device housings. Do not paint housing parts or screws.

MAN 1000310733 EN Version: C Status: RL (released | freigegeben) printed: 13.10.2026

valvesgo.com

valvesgo.com

3 Technical data

3.1 Standards and directives

This product complies with the legal requirements applicable at the time of placing on the market and has been developed and tested in accordance with the relevant European directives/regulations and harmonized standards. The conformity is documented and, if necessary, supported by evidence. The EU Declaration of Conformity can be found behind the respective type on the home page country.burkert.com

3.2 Operating conditions

The following values are indicated on the type label (see Type label [▸ 11]):

- Voltage (tolerance ± 10%) / current type
- Coil power (active power in W – at operating temperature)
- Pressure range
- Body material: brass (MS) or stainless steel (VA)
- Seal material: FKM, EPDM, NBR

Circuit function of 2/2-way valve:

A (NC)	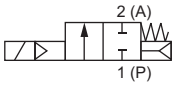	2/2-way valve, direct-acting, currentless Output A relieved

Degree of protection	IP65 according to DIN EN 60529/IEC 60529 with correctly connected and installed cable plug, e.g. Bürkert Type 2508
Ambient temperature	max. +55 °C or see electrical operating conditions
Storage temperature	-40...+80 °C

The following values must also be observed for valves with UL/UR approval:

Medium	Temperatures [°F]	Seal material EPDM	Seal material NBR	Seal material FKM
Air	Media	-22...+194	+14...+176	+32...+194
	Environment	-22...+130	+14...+130	+32...+130
Water	Media	+50...+194	+50...+176	+50...+194
	Environment	+32...+130	+32...+130	+32...+130
Inert gas	Media	-22...+194	+14...+176	+32...+194
	Environment	-22...+130	+14...+130	+32...+130

MAN 1000310733 EN Version: C Status: RL (released | freigegeben) printed: 13.10.2026

valvesgo.com

valvesgo.com

Permissible medium temperature depending on seal material and coil design:

Seal material	Variant with high-power coil or rectifier AC/DC [1]	Variant without electronics assemblies 50 Hz, 60 Hz [1]
NBR	-10...+80 °C	-10...+80 °C
FKM	0...+90 °C	0...+120 °C
EPDM	-30...+90 °C	-30...+100 °C

Permissible media depending on the seal material:

Seal material	Permitted media
NBR	Neutral media, compressed air, water, hydraulic oil
FKM	Per solutions, hot oils
EPDM	Oils and grease-free media, e.g. hot water

Operating duration

Unless otherwise specified on the type label, the solenoid actuator is suitable for continuous operation.
For the variant with a high-power coil, determine the maximum number of switching operations based on the electrical operating conditions.

This applies to devices with the following performance rating (type label specification): 80/6 W 90/7 W 100/9 W 120/8.5 W 120/10 W 130/9 W 145/10 W

Electrical operating conditions

	With high-performance electronics AC/DC	No electronics 50 Hz, 60 Hz
Ambient temperature (see following image)	Max. +70 °C	max. +55 °C
Operating mode (acc. to DIN VDE 0580)	Continuous operation Intermittent operation (for determining the permissible operating parameters, see the images below)	Continuous operation Intermittent operation
Temperature protection switch	The device has a resetting temperature protection switch that shuts off the device in case of impermissible heating during intermittent operation. Switch on again only after cooling down and new switch request.	without

[1] Type label details

MAN 1000310733 EN Version: C Status: RL (released | freigegeben) printed: 13.10.2026

valvesgo.com

Intermittent operation for variant with high-performance electronics AC/DC

Characteristic values (acc. to DIN VDE 0580)

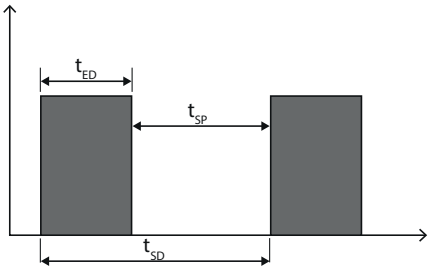

$$t_{SD}[s] = \frac{60}{SH\left[\frac{1}{min}\right]}$$

$$t_{ED}[s] = \frac{ED[\%]}{100} \times t_{SD}[s]$$

$$t_{SP}[s] = t_{SD}[s] - t_{ED}[s]$$

Fig. 1: Intermittent operation characteristics for variants with high-performance electronics

t_{SD} – cycle time
t_{ED} – duty cycle
t_{SP} – currentless break
ED – relative duty cycle
SH – switching frequency

Permissible operating parameters

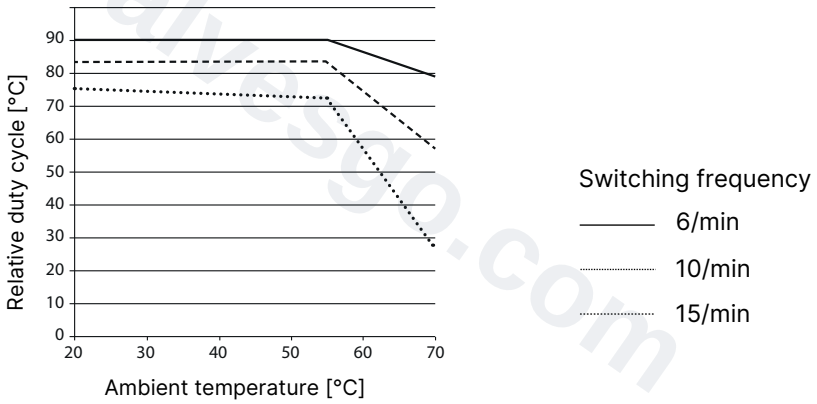

Fig. 2: Relative duty cycle dependent upon switching frequency

NOTICE!

Important information regarding functional reliability during continuous operation!

- During a long downtime at least 1–2 switching operations per day are recommended.

Service life: high switching frequency and high pressure will reduce overall service life.

MAN 1000310733 EN Version: C Status: RL (released | freigegeben) printed: 13.10.2026

valvesgo.com

3.3 Type label

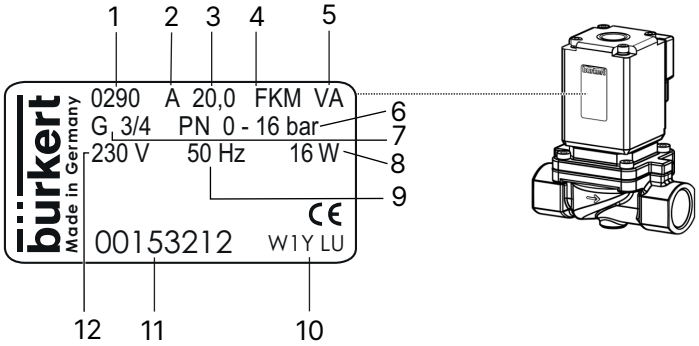

1	Type	2	Circuit function
3	Orifice	4	Sealing material
5	Body material	6	Pressure range
7	Port connection	8	Power
9	Frequency	10	Manufacture code
11	Article number	12	Voltage

MAN 1000310733 EN Version: C Status: RL (released | freigegeben) printed: 13.10.2026

valvesgo.com

valvesgo.com

4 Installation

4.1 Safety instructions

DANGER!

Risk of injury from high pressure in the system

- Before loosening lines or valves, switch off the pressure and vent the lines.

DANGER!

Risk of injury from electric shock

- Before reaching into the device or the system, switch off the power supply and secure it against reactivation.
- Observe the applicable accident prevention and safety regulations for electrical devices.

WARNING!

Risk of injury due to improper installation

- Installation may only be performed by trained technicians and with the appropriate tools.

WARNING!

Risk of injury from unintentional activation of the system and uncontrolled restart

- Secure the system against unintentional activation.
- Ensure a controlled restart after installation.

4.2 Before installation

Installation position: the installation position is flexible. Preferably: actuator at the top.

Dirt trap: for safe operation of the solenoid valve, a dirt trap (≤400µm) must be installed before the valve inlet.

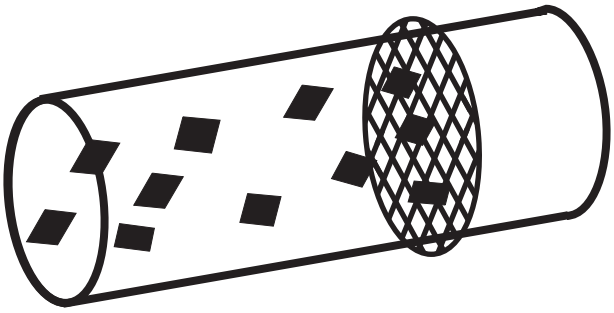

For devices with approval according to the European Gas Appliances Directive, installation of the filter is mandatory.

MAN 1000310733 EN Version: C Status: RL (released | freigegeben) printed: 13.10.2026

valvesgo.com

valvesgo.com

4.3 Installation

Seal material must not get into the device.

- Seal material must not get into the device.

NOTICE!

Breaking hazard

- Do not use the coil as a lever arm.

- Pay attention to flow direction:
  The arrow on the body indicates the flow direction (no function in opposite flow direction).

4.4 Electrical installation

DANGER!

Risk of injury from electric shock

- Before accessing the device or the system, switch off the power supply and secure it to prevent reactivation!
- Observe the applicable accident prevention and safety regulations for electrical devices.

WARNING!

If there is no protective conductor function between the coil and body, there is a risk of injury from electric shock

- Always connect the protective conductor.
- Check the protective conductor function after installing the coil.

WARNING!

Risk of short circuit or media leakage if fittings are not sealed properly

- Make sure valve seats are properly seated.
- Carefully screw the coil and cable plug together, i.e. the valve and pipelines.

Observe the voltage and current type according to the type label.
Maximum residual ripple for direct current is 10%.

MAN 1000310733 EN Version: C Status: RL (released | freigegeben) printed: 13.10.2026

valvesgo.com

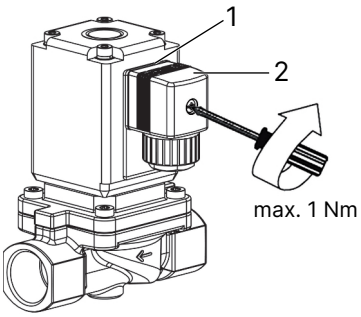

Fig. 3: Electrical installation

1	Seal	2	Approved cable plug, e.g. Type 2508 or other suitable cable plug in accordance with DIN EN 175301-803 Form A

- Screw cable plug tight (for approved types see data sheet), ensuring a maximum torque of 1 Nm.
- Check that the seal is properly fitted.
- Connect protective conductor and check electrical continuity between coil and body.

MAN 1000310733 EN Version: C Status: RL (released | freigegeben) printed: 13.10.2026

valvesgo.com

5 Maintenance, troubleshooting

5.1 Safety instructions

DANGER!

Risk of injury from high pressure in the system

- Before loosening lines and valves, turn off the pressure and vent the lines.

DANGER!

Risk of injury from electric shock

- Before accessing the device or the system, switch off the power supply and secure it to prevent reactivation!
- Observe the applicable accident prevention and safety regulations for electrical devices.

WARNING!

Risk of injury due to improper maintenance work

- Maintenance may be carried out only by trained specialist technicians and with the appropriate tools.

WARNING!

Risk of injury from unintentional activation of the system and uncontrolled restart

- Secure the system against unintentional activation.
- Ensure a controlled restart after maintenance is completed.

5.2 Troubleshooting

In the event of faults, check whether

- the device is installed according to regulations,
- the electrical and fluid connections have been properly set up,
- the device is not damaged,
  all screw-type connections are firmly tightened,
- voltage and pressure have been applied,
- and the pipelines are clean.

Fault	Possible cause
Valve does not actuate	Short circuit or coil interrupted
	Operating pressure outside the permissible pressure range
	Core and/or core area contaminated
Valve does not close	Interior of the valve soiled

If the valve still does not actuate, contact your local Bürkert Service representative.

MAN 1000310733 EN Version: C Status: RL (released | freigegeben) printed: 13.10.2026

valvesgo.com

valvesgo.com

6 Spare parts

CAUTION!

Risk of injury and/or damage to property due to incorrect parts

Incorrect accessories and unsuitable spare parts may cause injuries and damage the device and the surrounding area.

- ▶Use only original accessories and original spare parts from Bürkert.

6.1 Ordering spare parts

The spare parts SET 1 (coil set) or SET 3 (wearing part set) can be ordered based on the identification number of the device.

For variants with approval, repair may only be carried out by Bürkert.

SET 1 = Coil set
SET 3 = Wearing part set

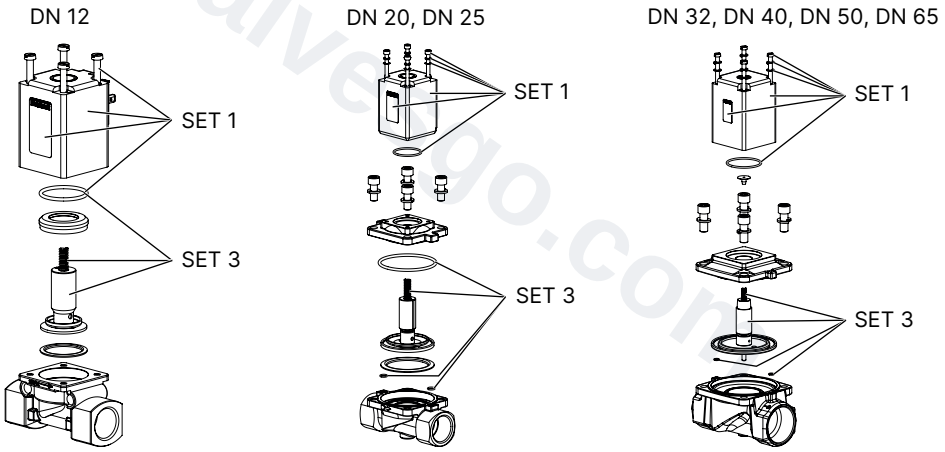

Fig. 4: Overview of spare parts

MAN 1000310733 EN Version: C Status: RL (released | freigegeben) printed: 13.10.2026

valvesgo.com

7 Logistics

7.1 Transport and storage

- Protect the device against moisture and dirt in the original packaging during transportation and storage.
- Avoid UV radiation and direct sunlight.
- Protect connections, if present, from damage with protective caps.
- Observe the permitted storage temperature.

7.2 Return

No work or tests will be carried out on the device until a valid Contamination Declaration has been received.

- To return a used device to Bürkert, contact the Bürkert sales office. A return number is required.

7.3 Disposal

Environmentally friendly disposal

- Follow national regulations regarding disposal and the environment.
- Collect electrical and electronic devices separately and dispose of them as special waste.

Further information at country.burkert.com

MAN 1000310733 EN Version: C Status: RL (released | freigegeben) printed: 13.10.2026

valvesgo.com