Conductivity meter, ELEMENT design

- Perfect for clean water and slightly concentrated liquids
- Compact measuring device for direct connection to the control level (PLC) via analogue 4...20 mA signal or digital IO-Link or Bürkert system bus (büS)/CANopen communication
- Parameterisation, calibration and transfer of parameterisation data all possible thanks to a removable display/configuration module
- Simulation of process values for diagnostics
- Universal process connection, three different cell constants to cover a wide range of applications such as reverse osmosis

Product variants described in the data sheet may differ from the product presentation and description.

Can be combined with

Type 8611
eCONTROL – Universal controller

Type 8619
multiCELL – multi-channel/ multi-function transmitter/ controller

Type 8693
Digital electropneumatic process controller for integrated mounting on process control valves

Type 8802
ELEMENT continuous control valve systems – overview

Type S022
Insertion adapter/fitting for ELEMENT analytical measuring devices

Type description

The Bürkert conductivity meter Type 8222 is designed for measuring the conductivity of liquids.

The sensor element comprises a two-electrode cell and a Pt1000 temperature probe. The sensor itself is available with three different cell constants C. Sensors with C= 0.01 or 0.1 cm^{-1} are fitted with stainless steel electrodes, while those with C= 1.0 cm^{-1} are fitted with graphite electrodes. Thanks to the design of the measuring device, Bürkert has simplified installation and maintenance work.

The Type 8222 device is available in two variants.
The first one, the so-called ELEMENT standard, is proposed with either three adjustable outputs (two digital outputs and one analogue output) or four adjustable outputs (two digital and two analogue), and can be equipped with a display. The display is only required for start-up, configuration (e.g. measuring range, units, calibration, limit values) and for process value display.
The second variant, the so-called ELEMENT neutrino, is a 2-wire device without display, equipped either with a 4...20 mA current output or with a digital communication mode via IO-Link or büS (Bürkert system bus based on CANopen).

Both variants are available with a G 1½ union nut for installation in an adapter with a G 1½ external thread sensor connection that is connected to the process. The ELEMENT neutrino variant is also available with a G ¾ external thread for screwing into an adapter with a G ¾ internal thread sensor connection.

The Type 8222 device converts the measuring signal and calculates the output signals. For the ELEMENT standard variant, these signals are provided via one or two M12 plug connectors, while for the ELEMENT neutrino variant, they are provided via one M12 plug connector or on a terminal strip via a cable gland. The device in the ELEMENT standard variant shows several values in different measurement units (if a display is mounted).

DTS 1000114221 EN Version: Y Status: RL (released | freigegeben | valide) printed: 30.09.2026

© Christian Bürkert GmbH & Co. KG, Subject to alteration

Visit product website

valvesgo.com

Table of contents

1. General technical data 4

1.1. About the device 4
1.2. All variants 4
1.3. ELEMENT standard variant 6
1.4. ELEMENT neutrino variant 8

2. Approvals and conformities 10

2.1. General notes 10
2.2. Conformity 10
2.3. Standards 10
2.4. Pressure Equipment Directive (PED) 10
Device used in a pipe 10
Device used in a vessel 10
2.5. North America (USA/Canada) 10
2.6. Foods and beverages/Hygiene 11

3. Materials 11

3.1. Bürkert resistApp 11
3.2. Material specifications 11
ELEMENT standard variant 11
ELEMENT neutrino variant 12

4. Dimensions 13

4.1. ELEMENT standard variant 13
4.2. ELEMENT neutrino variant 14
With a G 1½ union nut connection 14
With a G ¾ external threaded connection 14

5. Performance specifications 15

5.1. Pressure temperature diagram 15
ELEMENT standard and ELEMENT neutrino variants 15
ELEMENT standard and ELEMENT neutrino variants installed with a Type S022 adapter 15

6. Product installation 16

6.1. Installation notes 16

7. Product operation 17

7.1. Measurement principle 17

8. Product design and assembly 18

8.1. Product assembly 18

9. Product accessories 19

10. Networking and combination with other Bürkert products 19

11. Ordering information 20

11.1. Bürkert eShop 20
11.2. Recommendation regarding product selection 20
11.3. Bürkert product filter 20
11.4. Ordering chart 21
ELEMENT standard variant 21

DTS 1000114221 EN Version: Y Status: RL (released | freigegeben | valide) printed: 30.09.2026

valvesgo.com

ELEMENT neutrino variant with a 4...20 mA output 22
ELEMENT neutrino variant with digital communication 23
11.5. Ordering chart accessories 24

DTS 1000114221 EN Version: Y Status: RL (released | freigegeben | valide) printed: 30.09.2026

valvesgo.com

valvesgo.com

1. General technical data

1.1. About the device

The conductivity measuring device consists of a sensor available with three cell constants C plugged-in and pinned to the transmitter. The device is available in an ELEMENT standard variant or in an ELEMENT neutrino variant. The process connection of both variants is made via a G 1½ union nut in PVC or PVDF; or for the ELEMENT neutrino variant via a G ¾ thread.

The ELEMENT standard variant is available with up to two 4...20 mA analogue outputs or with up to two transistor outputs.
The ELEMENT neutrino variant is available with a 4...20 mA analogue output or with digital communication.

The device with digital communication features a status indicator on the cover, and is available with either a metal housing (metallic variant) or a plastic housing (all-plastic variant). The all-plastic variant is intended for corrosive environmental conditions, like those found in the electronic and semiconductor industry market.
The metallic variant is provided with digital IO-Link and büS communication (Bürkert system bus, CANopen-based), while the all-plastic variant features digital IO-Link communication only (büS is available only for service activities such as configuration or calibration).

1.2. All variants

Note:

- The following data applies to all variants mentioned above.
- If the device is mounted in a humid environment or outside, then the maximum voltage allowed is **35 V DC** instead of 36 V DC.

Product properties	
Material	
Make sure the device materials are compatible with the fluid you are using. Further information can be found in chapter "3.1. Bürkert resistApp" on page 11.	
Further information on the materials can be found in chapter "3.2. Material specifications" on page 11.	
Wetted parts	
Probe holder	PVDF, stainless steel 1.4571 (316Ti)
Electrode	For cell constant: • C = 0.01 cm^{-1}: stainless steel 1.4571 (316Ti) • C= 0.1 cm^{-1}: stainless steel 1.4571 (316Ti) • C = 1 cm^{-1}: graphite
Compatibility	With any pipe which is fitted with Bürkert S022 adapter. See **data sheet Type S022** ▶ for more information.
Pipe diameter	DN 32...DN 110 (DN 06...DN 25 under specific conditions, i.e. when using reducers)
Dimensions	Further information can be found in chapter "4. Dimensions" on page 13.
Probe	With cell constant • C = 0.01 cm^{-1} • C= 0.1 cm^{-1} • C = 1 cm^{-1}
Temperature sensor	Pt1000 integrated within the probe holder
Measuring range	
Conductivity measurement	0.05 µS/cm...10 mS/cm
Temperature measurement	- 20...+ 100 °C (- 4...+ 212 °F)
Performance data	
Conductivity measurement	
Measurement deviation	± 3 % of measured value
Measuring range resolution	1 nS/cm
Temperature measurement	
Measurement deviation	± 1 °C (1.8 °F)
4...20 mA output uncertainty	± 1 % of current range
Electrical data	
Power source (not supplied)	Limited power source according to UL/EN 62368-1 standards or limited energy circuit according to UL/EN 61010-1 paragraph 9.4
DC reverse polarity protection	Yes
Overvoltage protection	Yes

DTS 1000114221 EN Version: Y Status: RL (released | freigegeben | valide) printed: 30.09.2026

valvesgo.com

Medium data	
Fluid temperature	Device with • G 1½ PVC union nut connection: 0...+ 50 °C (+ 32...+ 122 °F) • G 1½ PVDF union nut connection (on request for ELEMENT neutrino variant): - 20...+ 100 °C (- 4...+ 212 °F) restricted by the used adapter Restriction with adapter S022 in: – PVC: 0...+ 50 °C (+ 32...+ 122 °F) – PP: 0...+ 80 °C (+ 32...+ 176 °F) – metal: - 20...+ 100 °C (- 4...+ 212 °F)
Fluid pressure [1.)]	Max. PN 16 (232 PSI) Further information can be found in chapter "5.1. Pressure temperature diagram" on page 15 (depends on selected probe).
Product connections	
Process connection	G 1½ internal thread for use with Type S022 adapter See **data sheet Type S022** ▶ for more information.
Approvals and conformities	
Directives	
CE directive	Further information on the CE directive can be found in chapter "2.3. Standards" on page 10.
Pressure equipment directive	Complying with article 4, paragraph 1 of 2014/68/EU directive Further information on the pressure equipment directive can be found in chapter "2.4. Pressure Equipment Directive (PED)" on page 10.
North America (USA/Canada)	UL Recognized for the USA and Canada
Environment and installation	
Ambient temperature	Operation and storage: - 10...+ 60 °C (+ 14...+ 140 °F)
Relative air humidity	≤ 85 %, without condensation
Height above sea level	Max. 2000 m
Operating condition	Continuous
Equipment mobility	Fixed
Application range	Indoor and outdoor Protect the device against electromagnetic interference, ultraviolet rays and, when installed outdoors, against the effects of climatic conditions.
Installation category	Category I according to UL/EN 61010-1
Pollution degree	Degree 2 according to UL/EN 61010-1

1.) Not evaluated by UL

DTS 1000114221 EN Version: Y Status: RL (released | freigegeben | valide) printed: 30.09.2026

valvesgo.com

1.3. ELEMENT standard variant

Product properties	
Material	
Further information on the materials can be found in chapter "3.2. Material specifications" on page 11.	
Non-wetted parts	
Cover	Polycarbonate (PC), transparent (opaque on request)
Housing	Stainless steel 1.4404 (316L), PPS
Screw	Stainless steel 1.4401 (316 (A4))
Grounding terminal and screw	Stainless steel 1.4301 (304 (A2))
Union nut	PVC or PVDF
Display/configuration module	PC
Menu keys	PBT
Seal	EPDM, silicone
Fixed connector holder	PPS CF30
Fixed connector	Nickel-plated brass
Temperature compensation	• None or • According to a predefined graph – linear or – NaCl or – ultra pure water or • According to a graph defined especially for your process
Concentration	Conversion of conductivity to dissolved electrolyte concentration (Total dissolved solids, TDS) by using a user-adjustable factor
Product accessories	
Display/configuration module	Grey dot matrix 128 × 64 with backlighting
Performance data	
Conductivity measurement	
Minimum scale	2 % of the full scale (i.e. for the sensor with C = 0.1: range from 100...104 µS corresponds to 4...20 mA current output)
Temperature measurement	
Measuring range resolution	0.1 °C (0.18 °F)
Minimal scale	10 °C (i.e. + 10...+ 20 °C (+ 50...+ 68 °F) corresponds to 4...20 mA current output)
Electrical data	
Operating voltage	• 3 outputs transmitter (2-wire) variant: 14...36 V DC, filtered and regulated • 4 outputs transmitter (3-wire) variant: 12...36 V DC, filtered and regulated Connection to main supply: permanent, through external SELV (Safety Extra Low Voltage) and LPS (Limited Power Source) power supply
Current consumption	With sensor • ≤ 1 A (with transistors load) • 3 outputs transmitter (2-wire) variant: ≤ 25 mA (at 14 V DC without transistors load, with current loop) • 4 outputs transmitter (3-wire) variant: ≤ 5 mA (at 12 V DC without transistors load, without current loop)

DTS 1000114221 EN Version: Y Status: RL (released | freigegeben | valide) printed: 30.09.2026

valvesgo.com

Output	
Digital output	Transistor: • adjustable as sourcing or sinking (respectively both as PNP or NPN), open collector • max. 700 mA • 0.5 A max. per transistor if the 2 transistor outputs are wired • NPN-output: 0.2...36 V DC • PNP-output: Power supply • protected against overvoltage, polarity reversals and short circuit
Analogue output	Current: • 4...20 mA adjustable as sourcing or sinking (in the same mode as transistor) • response time (10 %...90 %): 150 ms (standard) • 1 current output (3 outputs transmitter (2-wire) variant) max. loop impedance: 1100 Ω at 36 V DC, 610 Ω at 24 V DC, 180 Ω at 14 V DC • 2 current outputs (4 outputs transmitter (3-wire) variant) max. loop impedance: 1100 Ω at 36 V DC, 610 Ω at 24 V DC, 100 Ω at 12 V DC
Voltage supply cable	The female M12 connector and/or the male M12 connector are not included in the delivery and must be ordered separately, see chapter **"11.5. Ordering chart accessories" on page 24**. For these connectors, use a shielded cable with: • diameter: 3...6.5 mm • cross section of wires: max. 0.75 mm²
Product connections	
Electrical connection	• 3 outputs transmitter (2-wire) variant: 1 × 5-pin M12 male connector • 4 outputs transmitter (3-wire) variant: 1 × 5-pin M12 male and 1 × 5-pin M12 female connectors
Approvals and conformities	
Foods and beverages/Hygiene	FDA declaration of conformity
Environment and installation	
Degree of protection [1.)] according to IEC/EN 60529	IP65, IP67 under the following simultaneous conditions: • device wired • cover screwed tight • M12 connector mounted and tightened

1.) Not evaluated by UL

DTS 1000114221 EN Version: Y Status: RL (released | freigegeben | valide) printed: 30.09.2026

valvesgo.com

valvesgo.com

1.4. ELEMENT neutrino variant

Product properties	
Material	
Further information on the materials can be found in chapter "3.2. Material specifications" on page 11.	
Wetted parts	
Seal	EPDM (only device with G ¾ external threaded connection)
Non-wetted parts	
Cover	PPS
Light guide	Digital communication variant: PC, PMMA and NBR88
Housing	• Analogue output variant: stainless steel 1.4404 (316L), PPS • Digital communication variant: – stainless steel 1.4404 (316L), PPS (metallic variant) – PPS (all-plastic variant)
Grounding terminal	Nickel-plated brass (only metallic variant)
Union nut	PVC (PVDF on request)
Seal	EPDM
Fixed connector	• Analogue output variant: PA66 • Digital communication variant: – nickel-plated brass (metallic variant) – PA66 (all-plastic variant)
Cable gland	Analogue output variant: PA66
Temperature compensation	• None or • According to a predefined graph – linear (only for digital communication variant) or – NaCl or – ultra pure water (only with C = 0.01)
Electrical data	
Operating voltage	12...36 V DC, filtered and regulated Connection to main supply: permanent, through external SELV (Safety Extra Low Voltage) and LPS (Limited Power Source) power supply
Current consumption	• Analogue output variant: ≤ 25 mA (with sensor) • Digital communication variant: ≤ 50 mA (with sensor)
Input/Output	
Digital input/output	Digital communication variant: through the communication interface • Bürkert system bus (büS)/CANopen • IO-Link
Analogue output	Analogue output variant: • current of 4...20 mA • response time (10 %...90 %): 5 s (standard) • max. loop impedance: 1100 Ω at 36 V DC, 610 Ω at 24 V DC, 100 Ω at 12 V DC

DTS 1000114221 EN Version: Y Status: RL (released | freigegeben | valide) printed: 30.09.2026

valvesgo.com

Voltage supply cable	• For connector: The female M12 connector is not included in the delivery and must be ordered separately, see chapter "11.5. Ordering chart accessories" on page 24. For this connector, use according to the output of the device: – a shielded cable with: – diameter of 3...6.5 mm – cross section of wires: max. 0.75 mm² – a CANopen standard cable for Bürkert system bus (büS)/CANopen communication, max. 50 m length – a standardised industrial cable (unshielded 3- or 4-wire cable) for IO-Link communication, max. 20 m length • For terminal strip via a cable gland (measuring data according to CEI 664-1/VDE 0110 (4.97)) use a cable: – solid H05(07) V-U: 0.25...1.5 mm² – flexible H05(07) V-K: 0.25...1.5 mm² – with wire end ferrule without plastic collar: 0.25...1.5 mm² – with wire end ferrule with plastic collar: 0.25...0.75 mm² – diameter: 4...8 mm
Medium data	
Fluid temperature	• Device with G ¾ external threaded connection: - 20...+ 100 °C (- 4...+ 212 °F) restricted by the used adapter • Restriction with adapter S022 in PVC: 0...+ 50 °C (+ 32...+ 122 °F)
Product connections	
Process connection	G ¾ external threaded for use with Type S022 adapter See **data sheet Type S022** ▶ for more information.
Electrical connection	• 1 × 5-pin free positionable M12 male connector or • Terminal strip via 1x cable gland M16 × 1.5
Data transfer	
Digital communication: büS	
External communication	Via büS (Bürkert system bus, CANopen-based)
Digital communication: IO-Link	
Communication interface	IO-Link device V1.1.2
SIO mode	No
Transmission speed (baud rate)	COM 3 (230.4 kBd)
Type of ports	Class A
Cycle time	Min. 5 ms
Process data width	48 input bits, 8 output bits
IO-Link data storage	Yes
Block configuration	No
IO device description (IODD)	The device description is available in the operating instructions which can be found on our website under the "User Manuals" heading for **Type 8222** ▶. Alternatively, see "Device Description Files" under the "Software" heading for **Type 8222** ▶ or at **https://ioddfinder.io-link.com**
Environment and installation	
Degree of protection	• IP65 [1.], IP67 [1.] (according to IEC/EN 60529) • NEMA 4X and NEMA 6P (according to NEMA250) (with device installed on the fitting) • UL50E under the following simultaneous conditions: • device wired • cover screwed tight • M12 connector or glands mounted and tightened • with blind plug on unused cable glands

1.) Not evaluated by UL

DTS 1000114221 EN Version: Y Status: RL (released | freigegeben | valide) printed: 30.09.2026

valvesgo.com

2. Approvals and conformities

2.1. General notes

- The approvals and conformities listed below must be stated when making enquiries. This is the only way to ensure that the product complies with all required specifications.
- Not all available variants of the device can be supplied with the below mentioned approvals or conformities.

2.2. Conformity

In accordance with the EU Declaration of Conformity, the product is compliant with the EU Directives.

2.3. Standards

The applied standards which are used to demonstrate compliance with the EU Directives are listed in the EU-type Examination Certificate and/or the EU Declaration of Conformity.

2.4. Pressure Equipment Directive (PED)

The device conforms to Article 4, Paragraph 1 of the Pressure Equipment Directive 2014/68/EU under the following conditions:

valvesgo.com

Device used in a pipe

Note:
- The data in the table is independent of the chemical compatibility of the material and the fluid.
- PS = maximum admissible pressure (in bar), DN = nominal diameter of the pipe

Type of fluid	Conditions
Fluid group 1, Article 4, Paragraph 1.c.i	DN ≤ 25
Fluid group 2, Article 4, Paragraph 1.c.i	DN ≤ 32 or PS*DN ≤ 1000
Fluid group 1, Article 4, Paragraph 1.c.ii	DN ≤ 25 or PS*DN ≤ 2000
Fluid group 2, Article 4, Paragraph 1.c.ii	DN ≤ 200 or PS ≤ 10 or PS*DN ≤ 5000

Device used in a vessel

Note:
- The data in the table is independent of the chemical compatibility of the material and the fluid.
- PS = maximum admissible pressure (in bar), V = vessel volume

Type of fluid	Conditions
Fluid group 1, Article 4, Paragraph 1.a.i	V > 1 L and PS*V ≤ 25 bar.L or PS ≤ 200 bar
Fluid group 2, Article 4, Paragraph 1.a.i	V > 1 L and PS*V ≤ 50 bar.L or PS ≤ 1000 bar
Fluid group 1, Article 4, Paragraph 1.a.ii	V > 1 L and PS*V ≤ 200 bar.L or PS ≤ 500 bar
Fluid group 2, Article 4, Paragraph 1.a.ii	PS > 10 bar and PS*V ≤ 10000 bar.L or PS ≤ 1000 bar

2.5. North America (USA/Canada)

Approval	Description
c UL us	**Optional: UL Recognized for the USA and Canada** The products are UL Recognized for the USA and Canada according to: • UL 61010-1 • CAN/CSA-C22.2 No. 61010-1

DTS 1000114221 EN Version: Y Status: RL (released | freigegeben | valide) printed: 30.09.2026

valvesgo.com

2.6. Foods and beverages/Hygiene

Conformity	Description
FDA	**FDA – Code of Federal Regulations** The devices are compliant with the Code of Federal Regulations published by the FDA (Food and Drug Administration, USA) according to the manufacturer's declaration.

3. Materials

3.1. Bürkert resistApp

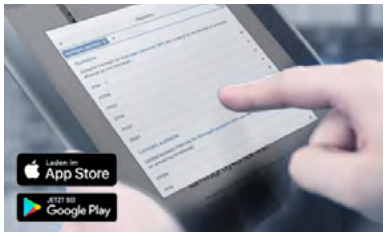

Bürkert resistApp – Chemical resistance chart

You want to ensure the reliability and durability of the materials in your individual application case? Verify your combination of media and materials on our website or in our resistApp.

Start chemical resistance check

3.2. Material specifications

ELEMENT standard variant

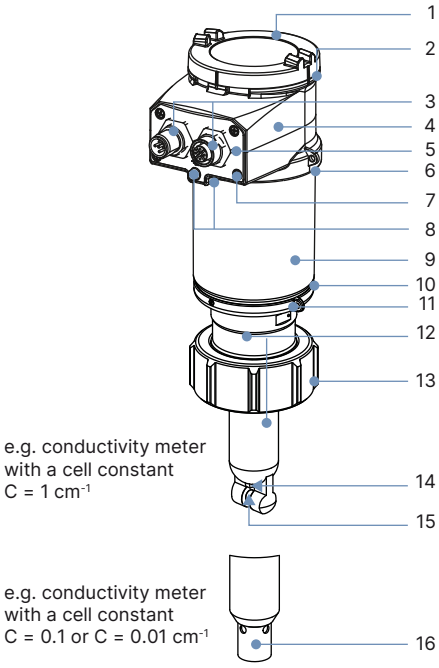

No.	Element	Material
1	Cover	PC
2	Seal	Silicone
3	M12 fixed connector (female/ male)	Nickel-plated brass
4	Housing (top)	PPS
5	Fixed connector holder	PPS CF30
6	Seal	EPDM
7	Screws	Stainless steel 1.4301 (304 (A2))
8	Grounding terminal and screw	Stainless steel 1.4401 (316 (A4))
9	Housing	Stainless steel 1.4404 (316L)
10	Seal	EPDM
11	Housing (base)	PPS
12	Probe holder	PVDF
13	Union nut	PVC or PVDF
14	Pt probe (C= 1 cm^{-1})	Stainless steel 1.4571 (316Ti)
15	Electrode (C= 1 cm^{-1})	Graphite
16	Pt Probe, electrode (C = 0.1 or 0.01 cm^{-1})	Stainless steel 1.4571 (316Ti)

DTS 1000114221 EN Version: Y Status: RL (released | freigegeben | valide) printed: 30.09.2026

valvesgo.com

ELEMENT neutrino variant

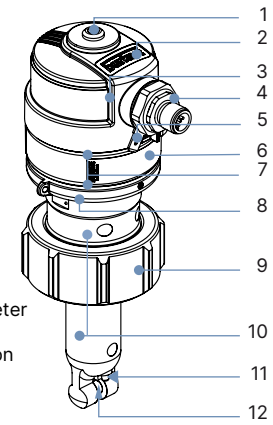

e.g. conductivity meter with a G 1½" nut connection and a cell constant C = 1 cm⁻¹

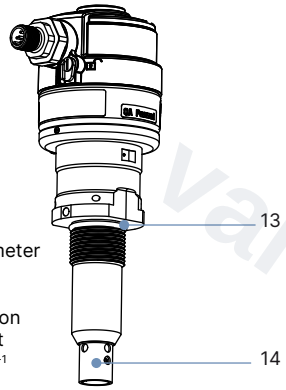

e.g. conductivity meter with a G ¾" external threaded connection and a cell constant C = 0.1 or 0.01 cm⁻¹

No.	Element	Material
1	Light guide	PC, PMMA and NBR88 (only digital communication variant)
2	Cover	PPS
3	Seal	EPDM
4	M12 male fixed connector	• PA66 (4...20 mA output variant and digital communication all-plastic variant) • Nickel-plated brass (digital communication metallic variant)
	or cable gland	PA66 (only 4...20 mA output variant)
5	Ground terminal	Nickel-plated brass (only digital communication metallic variant)
6	Housing	• PPS (digital communication all-plastic variant) • Stainless steel 1.4404 (316 L) and PPS (4...20 mA output variant and digital communication metallic variant)
7	Seal	EPDM
8	Housing (base)	PPS
9	Union nut	PVC (or PVDF on request)
10	Probe holder	PVDF
11	Pt probe (C= 1 cm⁻¹)	Stainless steel 1.4571 (316Ti)
12	Electrode (C= 1 cm⁻¹)	Graphite
13	Seal	EPDM
14	Pt probe, electrode (c= 0.1 or 0.01 cm⁻¹)	Stainless steel 1.4571 (316Ti)

DTS 1000114221 EN Version: Y Status: RL (released | freigegeben | valide) printed: 30.09.2026

valvesgo.com

valvesgo.com

4. Dimensions

4.1. ELEMENT standard variant

Note:
Dimensions in mm, unless otherwise stated

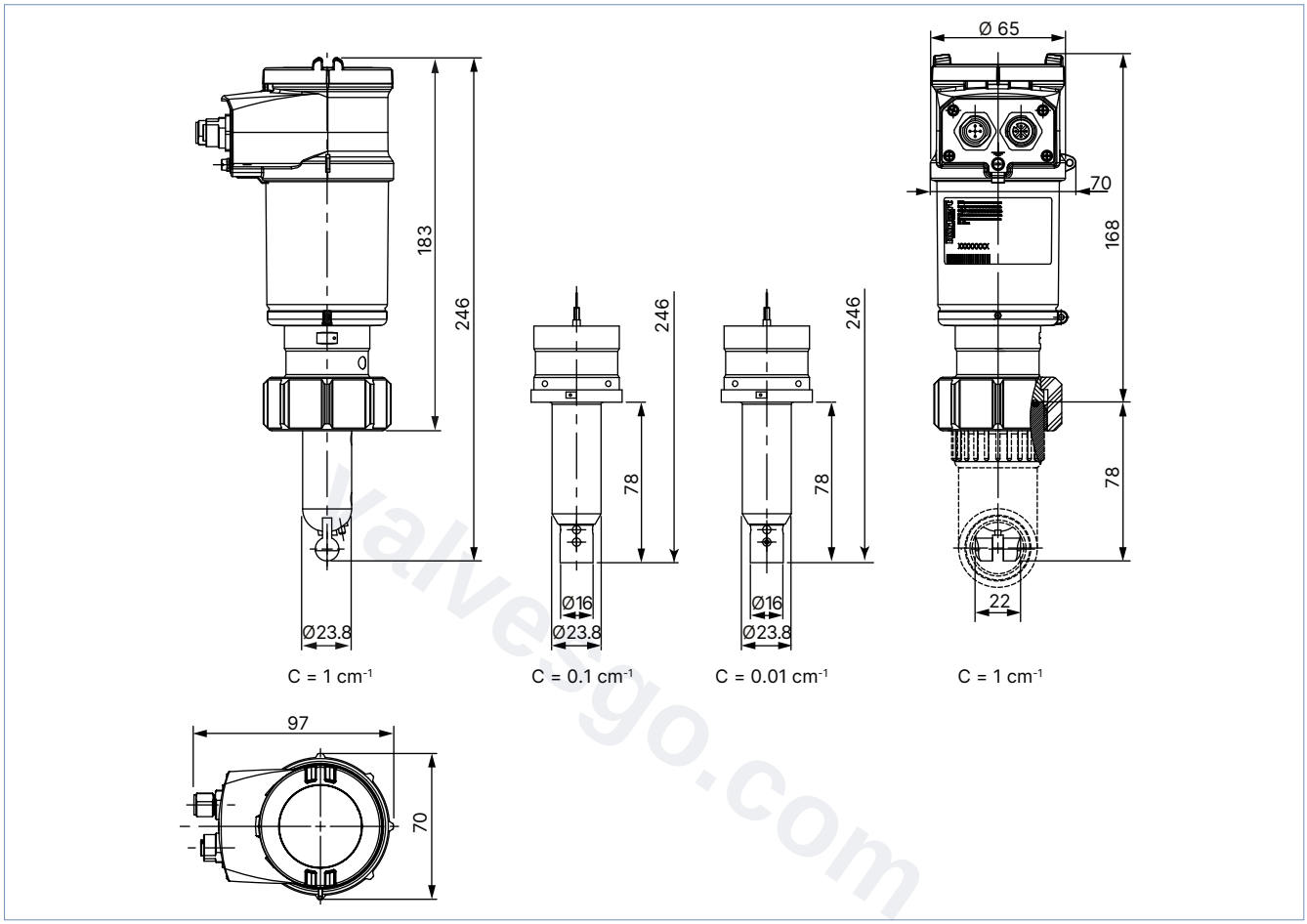

DTS 1000114221 EN Version: Y Status: RL (released | freigegeben | valide) printed: 30.09.2026

valvesgo.com

4.2. ELEMENT neutrino variant

With a G 1½ union nut connection

Note:
Dimensions in mm, unless otherwise stated

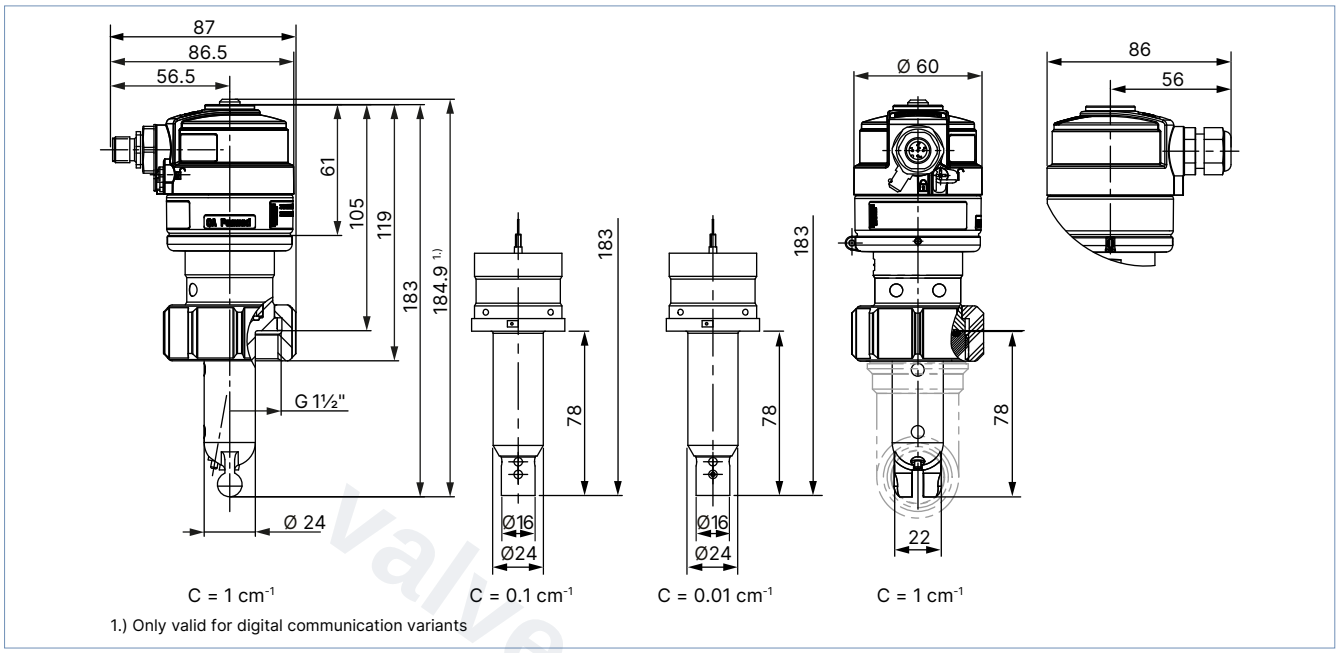

With a G ¾ external threaded connection

Note:
Dimensions in mm, unless otherwise stated

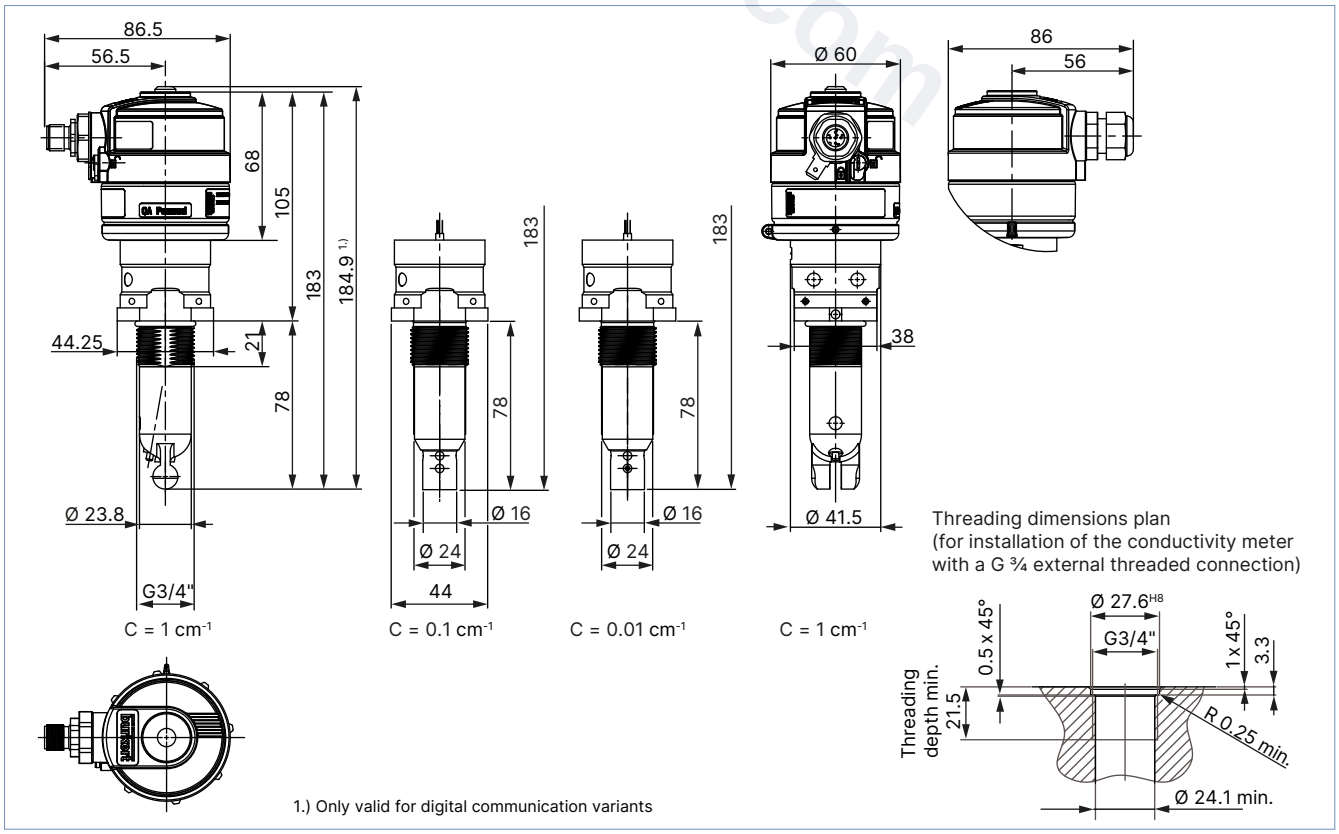

DTS 1000114221 EN Version: Y Status: RL (released | freigegeben | valide) printed: 30.09.2026

valvesgo.com

5. Performance specifications

5.1. Pressure temperature diagram

ELEMENT standard and ELEMENT neutrino variants

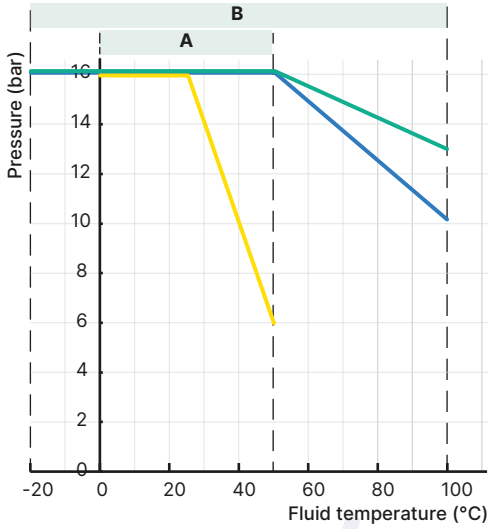

Application range of Type 8222 ELEMENT standard variant and ELEMENT neutrino variant
A: device with PVC union nut
B: device with
- a PVDF union nut connection (on request for ELEMENT neutrino variant) or
- with a G ¾ external threaded connection (only for ELEMENT neutrino variant)

The measures have been made at an ambient temperature of + 60 °C

PVDF (C = 0.01 and C = 0.1)
PVDF (C = 1)
PVC

ELEMENT standard and ELEMENT neutrino variants installed with a Type S022 adapter

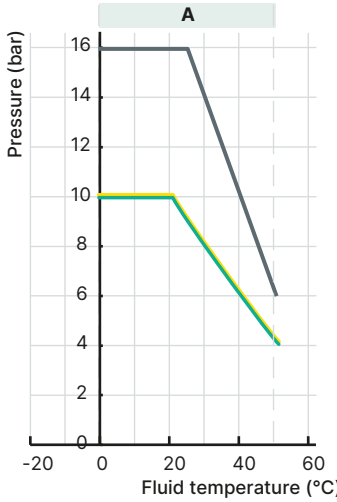

PVC

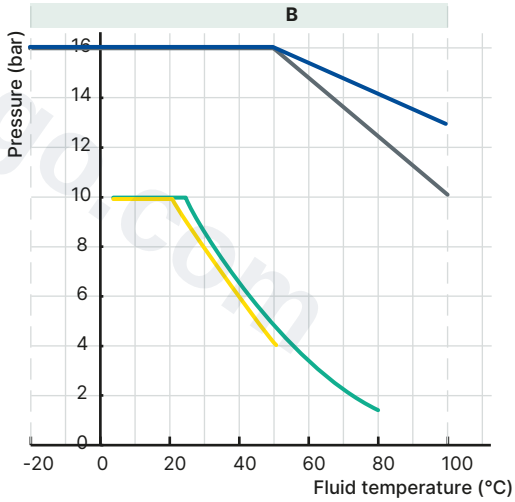

Application range of Type 8222 ELEMENT standard variant and ELEMENT neutrino variant with Type S022 adaptor,
A: device with PVC union nut
PVC **PP** **Metal**

B: device with PVDF union nut (on request, for ELEMENT neutrino variant)
PVC **PP** **Metal** (C = 1)
Metal (C = 0.01 and C = 0.1)

C: device with a G ¾ external threaded connection (only for ELEMENT neutrino variant)
PVC **PP** **Metal**

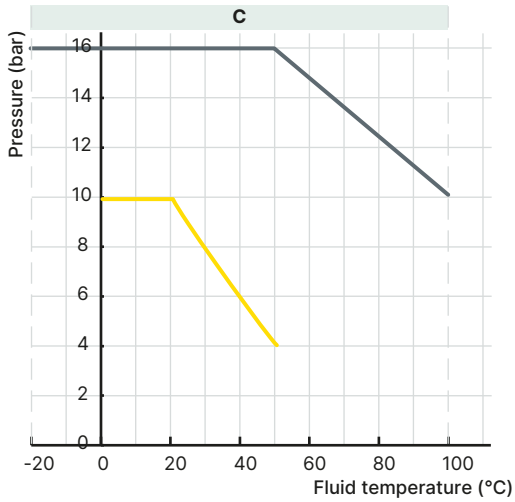

DTS 1000114221 EN Version: Y Status: RL (released | freigegeben | valide) printed: 30.09.2026

valvesgo.com

6. Product installation

6.1. Installation notes

The ELEMENT Type 8222 conductivity meter, in standard or neutrino variant, can be installed into any adapter/fitting with a G 1½ external threaded sensor connection by simply tightening the G 1½ union nut. The ELEMENT conductivity meter, in neutrino variant with G ¾ external threaded connection, can be installed into any adapter with a G ¾ internal threaded (further information on the threading dimensions plan can be found in chapter **"With a G ¾ external threaded connection" on page 14**).
Select the appropriate adapter, taking into account the specific requirements of the measuring device and the adapter material (temperature and pressure), and install it on a pipe.

For a mounting on a tank or a direct mounting on a pipe (DN 100 or DN 110), an adapter with a G 1½ external threaded sensor connection or with a G ¾ internal threaded sensor connection (depending on conductivity meter variant) must be used.

The use of our Type S022 analysis measurement chamber represents an alternative. It is specifically designed for the installation of the ELEMENT conductivity meter in all pipe systems, either directly in the main stream or in a by-pass line.

See **data sheet Type S022** ▶ for more information.

Carefully install the unit on the fitting. It can be installed in any position **(prefer "A" mounting to install a Type 8222 with sensor C = 0.1 or C = 0.01 cm**$^{-1}$).

In order obtain reliable measurements, air bubbles must be avoided.
Ensure that the mounting location provides a continuous and complete immersion of the probe in the flow stream.

ELEMENT standard variant

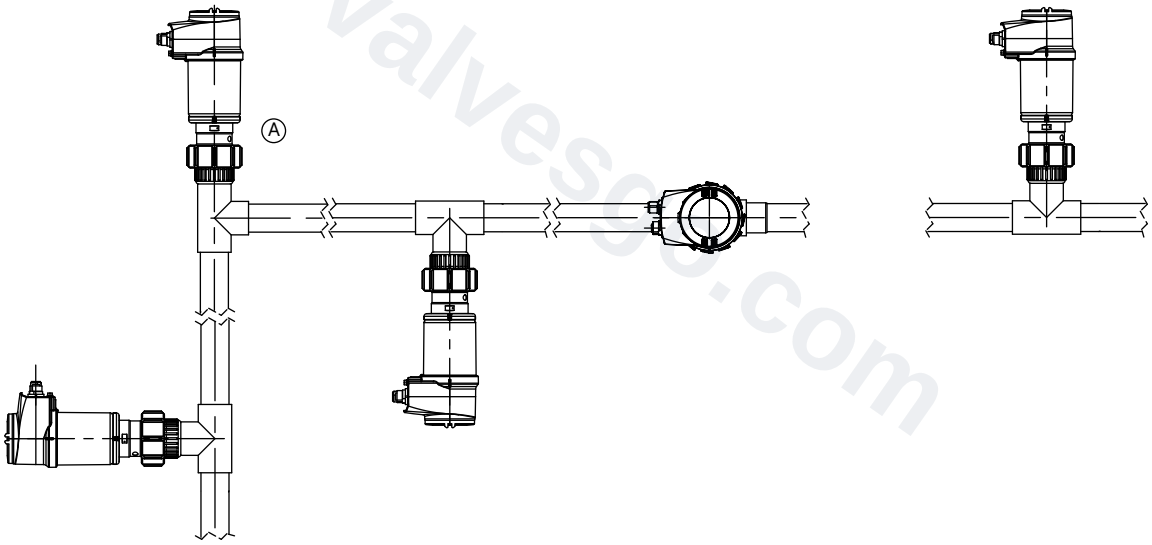

ELEMENT neutrino variant

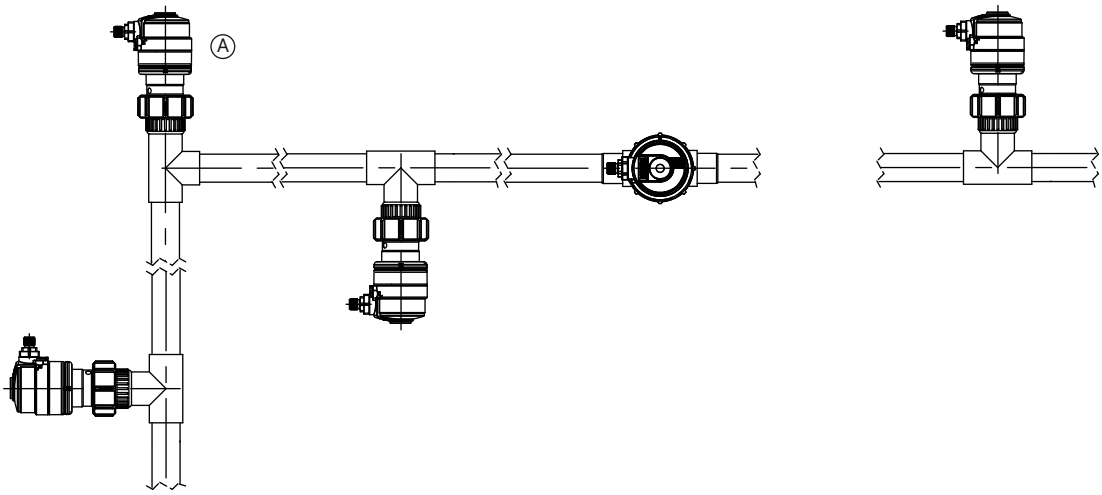

The device must be protected from constant heat radiation and other environmental influences, such as direct exposure to sunlight.

DTS 1000114221 EN Version: Y Status: RL (released | freigegeben | valide) printed: 30.09.2026

valvesgo.com

7. Product operation

7.1. Measurement principle

Conductivity is defined by the property of a solution to conduct electrical current. The charge carriers are ions (e.g. dissolved salts or acids).

Regarding this device, the measuring cell consists of two metal electrodes which are set at a fixed distance apart and with a known specified surface. The measured current is a direct function of the quantity of ions contained in the solution. The conductivity is calculated using Ohm's law.

There are many types of conductivity probes, whose measurement range varies greatly depending on the electrode arrangement. To compensate for the geometry of the conductivity cell, a cell constant is used: Conductivity [S/cm] = Measurement [S] x Cell constant [1/cm].

The conductivity sensor can be equipped with 3 measuring cells of different constants: C = 0.01; 0.1 and 1.0 cm^{-1}.

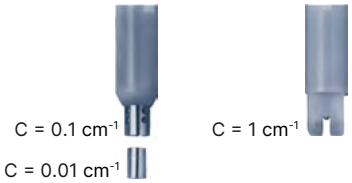

The sensor is selected according to the measuring range and medium using the table below.

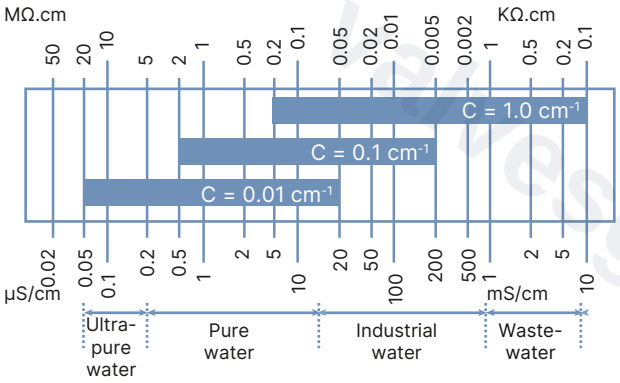

The meter is either a two wire device (3 outputs transmitter ELEMENT standard variant or ELEMENT neutrino variant) or a three wire device (4 outputs transmitter ELEMENT standard variant) which requires a power supply of 14 V DC (3 outputs transmitter ELEMENT standard variant) or 12 V DC (4 outputs transmitter ELEMENT standard variant or ELEMENT neutrino variant) up to 36 V DC and delivers a 4...20 mA standard signal proportional to the conductivity and/or to the temperature of the fluid as output signal.

The measuring range on which the 4...20 mA output must match is selectable for

- the ELEMENT standard variant through a display/configuration module and
- the ELEMENT neutrino variant through a rotary switch. This measuring range can also be customized on request (contact your nearest Bürkert office).

The electrical connection is provided via one or two M12 connectors for the ELEMENT standard variant or via one free positionable M12 male connector or terminal strip through cable gland for the ELEMENT neutrino variant.

DTS 1000114221 EN Version: Y Status: RL (released | freigegeben | valide) printed: 30.09.2026

valvesgo.com

8. Product design and assembly

8.1. Product assembly

Note:
The Type 8222 device can be installed with the help of the Type S022 adapter or fitting with

- G 1½ external threaded sensor connection for ELEMENT standard and ELEMENT neutrino variant or
- G ¾ internal threaded connection only for ELEMENT neutrino variant

into pipe systems or containers.

See **data sheet Type S022** ▶ for more information.

The conductivity meter consists of a sensor available with three different cell constants C, plugged-in and pined to an enclosure with cover, containing the electronic module. The sensor holder comprises a cell with two electrodes and a Pt1000 temperature sensor.

A removable display/configuration module complements the ELEMENT standard device variant. The conductivity meter can operate independently of this module, but it will be required for configuration of the device (i.e. set parameters, restore default parameters, configure information to be displayed, enter access codes, adjust 4...20 mA output(s) ...) and also for visualizing continuously the measured and processed data.

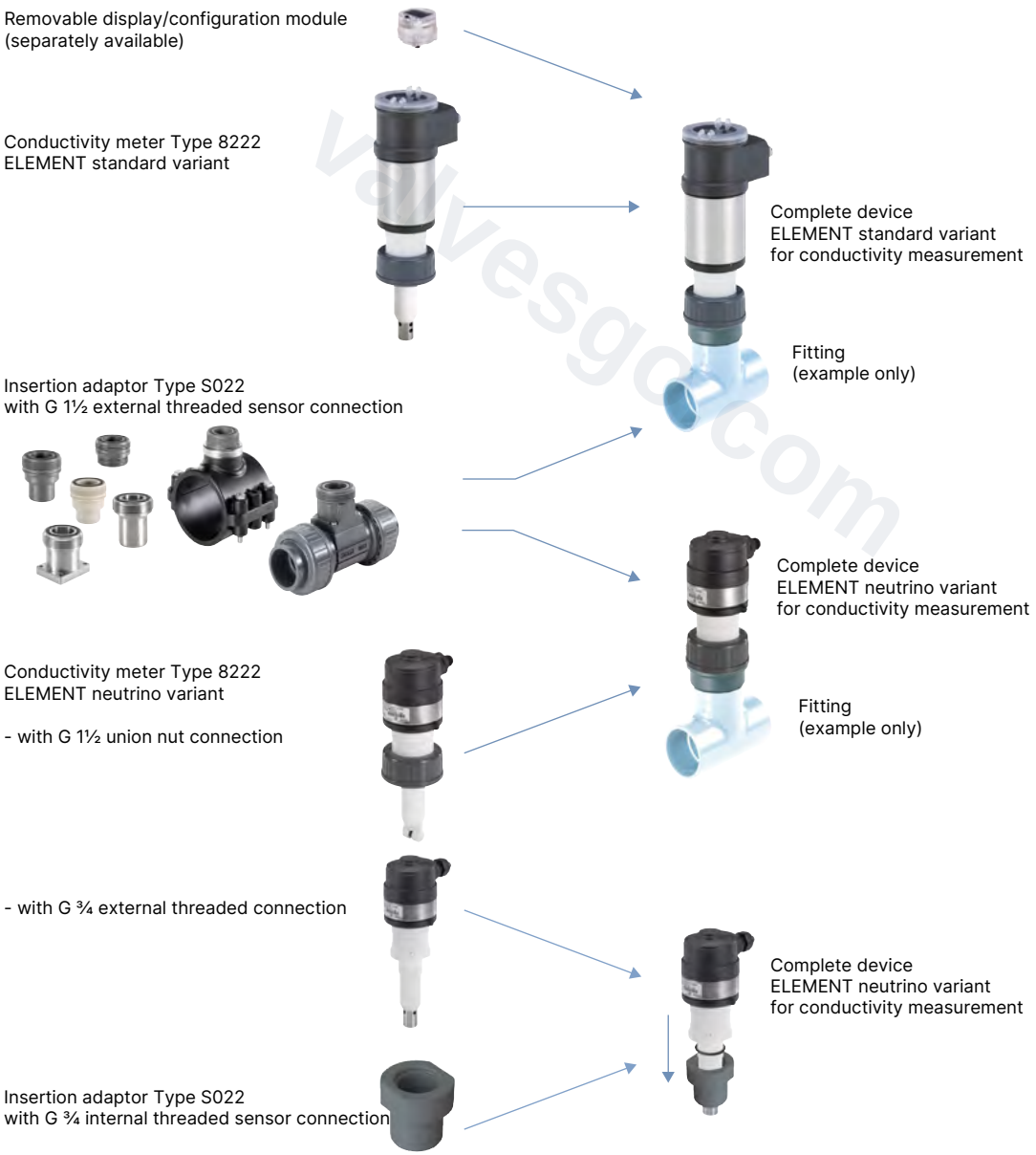

DTS 1000114221 EN Version: Y Status: RL (released | freigegeben | valide) printed: 30.09.2026

valvesgo.com

9. Product accessories

Note:
To configure a device with a digital communication, use the USB-büS-Interface set Type 8923 and the Bürkert Communicator software Type 8920.

See **"11.5. Ordering chart accessories" on page 24** for ordering information and **Software manual Type 8920** ▶ for more information.

Accessories	No.	Description
USB-büS interface set 1	**1**	Quick-Start
	2	Power supply: 100...240 V AC/24 V DC 1 A and power supply adapters for worldwide use
	3	büS terminating resistor on büS Y-splitter
	4	5-pin M12 male connector wired on free end cable, cable length: 0.2 m
	5	büS connection cable with 5-pin M12 male connector, micro USB B plug, cable length: 0.3 m
	6	büS adapter with 5-pin M12 male connector, A-coded to 5-pin M12 male connector, A-coded
	7	büS stick (USB to büS/CANopen adapter)
	8	büS service cable with 5-pin M12 female connector, mini USB plug and circular female connector for power supply, cable length: 0.7 m
	9	Magnetic key
USB-büS interface set 2 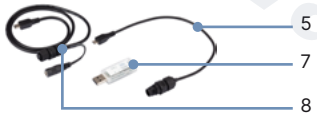		The Bürkert Communicator software can be downloaded from our website under the "Software" heading of **Type 8920** ▶.

10. Networking and combination with other Bürkert products

Example:

Type 8222

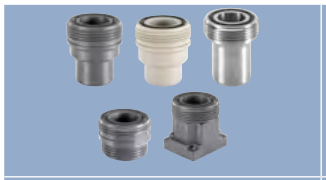			
Type S022 ▶ Insertion adapter/fitting for ELEMENT analytical measuring devices	**Type 8802** ▶ ELEMENT continuous control valve systems	**Type 8611** ▶ eCONTROL - Universal controller	**Type 8619** ▶ multiCELL - transmitter/controller

DTS 1000114221 EN Version: Y Status: RL (released | freigegeben | valide) printed: 30.09.2026

valvesgo.com

11. Ordering information

11.1. Bürkert eShop

Bürkert eShop – Easy ordering and quick delivery

You want to find your desired Bürkert product or spare part quickly and order directly? Our online shop is available for you 24/7. Sign up and enjoy all the benefits.

Order online now

11.2. Recommendation regarding product selection

Note:
When only ordering devices without a display/configuration module, make sure that you have a display/configuration module at least for parameterising the device. Otherwise you must also order one (see chapter "11.5. Ordering chart accessories" on page 24).

A complete conductivity measurement equipment consists of an conductivity meter Type 8222 (ELEMENT standard variant or ELEMENT neutrino variant), a removable display/configuration module (only for ELEMENT standard variant) and a Bürkert Insertion adapter Type S022 with a G 1½ external threaded (for ELEMENT standard variant or ELEMENT neutrino variant) or G ¾ internal threaded sensor connection (only for ELEMENT neutrino variant).

See **data sheet Type S022** ▶ for more information.

Two or three different components must be ordered to obtain a complete device. The following information is required:

- **Article no.** of the desired conductivity meter Type 8222 in the ELEMENT standard variant without display/configuration module or in the ELEMENT neutrino variant (see chapter "11.4. Ordering chart" on page 21)
- **Article no.** of the removable display/configuration module, if necessary (see chapter "11.5. Ordering chart accessories" on page 24)
- **Article no.** of the selected S022 Insertion adapter with G 1½ external threaded (for ELEMENT standard or ELEMENT neutrino variant with union nut) or G ¾ internal threaded sensor connection (only for ELEMENT neutrino variant to be screwed). See **data sheet Type S022** ▶.

11.3. Bürkert product filter

Bürkert product filter – Get quickly to the right product

You want to select products comfortably based on your technical requirements?
Use the Bürkert product filter and find suitable articles for your application quickly and easily.

Try out our product filter

DTS 1000114221 EN Version: Y Status: RL (released | freigegeben | valide) printed: 30.09.2026

valvesgo.com

11.4. Ordering chart

ELEMENT standard variant

Note:

- All settings as well as the digital output have to be configured with the display/configuration module (must be ordered separately).
- The following article nos. have a transparent cover and an integrated Pt1000 as standard.

Operating voltage	Probe	Output	Nut material	UL approval	Electrical connection [1.)]	Article no.
14...36 V DC	C = 0.01 cm^{-1}	3 outputs: 2 x transistors NPN/PNP + 1 × 4...20 mA (2 wires)	PVC	–	5-pin M12 male connector	559618
				UL Recognized		562394
			PVDF	–		559620
				UL Recognized		562396
	C = 0.1 cm^{-1}		PVC	–		559614
				UL Recognized		559624
			PVDF	–		559616
				UL Recognized		559626
	C = 1.0 cm^{-1}		PVC	–		559610
				UL Recognized		559638
			PVDF	–		559612
				UL Recognized		559622
12...36 V DC	C = 0.01 cm^{-1}	4 outputs: 2 x transistors NPN/PNP + 2 × 4...20 mA (3 wires)	PVC	–	5-pin M12 male and 5-pin M12 female connectors	559619
				UL Recognized		562395
			PVDF	–		559621
				UL Recognized		562397
	C = 0.1 cm^{-1}		PVC	–		559615
				UL Recognized		559625
			PVDF	–		559617
				UL Recognized		559627
	C = 1.0 cm^{-1}		PVC	–		559611
				UL Recognized		559639
			PVDF	–		559613
				UL Recognized		559623

1.) Must be ordered separately (see chapter "11.5. Ordering chart accessories" on page 24): M12 male/female connectors (only female for the variant with one 4...20 mA output, 1 male + 1 female for the variant with two 4...20 mA outputs of the device)

Further variants on request

Additional

- Pre-parameterized devices with configuration: 2- or 4-outputs, filter, temperature compensation, threshold, etc.
- With display/configuration module

Certification and Calibration

Calibration certificates

DTS 1000114221 EN Version: Y Status: RL (released | freigegeben | valide) printed: 30.09.2026

valvesgo.com

ELEMENT neutrino variant with a 4...20 mA output

Operating voltage	Probe	Output	Nut material	UL approval	Electrical connection [1.)]	Article no.
Variant with G 1½ union nut						
12...36 V DC	C = 0.01 cm^{-1}	1 × 4...20 mA (2 wires)	PVC	–	5-pin M12 male connector	561661
				UL Recognized		562545
			PVDF	–		562503
				UL Recognized		On request
			PVC	–	Cable gland	561662
				UL Recognized		562546
			PVDF	–		562652
				UL Recognized		567396
	C = 0.1 cm^{-1}		PVC	–	5-pin M12 male connector	561663
				UL Recognized		562547
			PVDF	–		562478
				UL Recognized		On request
			PVC	–	Cable gland	561664
				UL Recognized		562548
			PVDF	–		562479
				UL Recognized		567357
	C = 1.0 cm^{-1}		PVC	–	5-pin M12 male connector	561665
				UL Recognized		562549
			PVDF	–		562271
				UL Recognized		On request
			PVC	–	Cable gland	561666
				UL Recognized		562550
			PVDF	–		562653
				UL Recognized		568024
Variant with G ¾ external threaded						
12...36 V DC	C = 0.01 cm^{-1}	1 × 4...20 mA (2 wires)	–	–	5-pin M12 male connector	561667
				UL Recognized		562551
				–	Cable gland	561668
				UL Recognized		562552
	C = 0.1 cm^{-1}			–	5-pin M12 male connector	561669
				UL Recognized		562553
				–	Cable gland	561670
				UL Recognized		562554
	C = 1.0 cm^{-1}			–	5-pin M12 male connector	561671
				UL Recognized		562555
				–	Cable gland	561672
				UL Recognized		562556

1.) Must be ordered separately (see chapter "11.5. Ordering chart accessories" on page 24): M12 female connector

DTS 1000114221 EN Version: Y Status: RL (released | freigegeben | valide) printed: 30.09.2026

valvesgo.com

valvesgo.com

ELEMENT neutrino variant with digital communication

Note:
The communication protocol is selected automatically by the device depending on the master controlling it.

Operating voltage	Probe	Output	Nut material	UL approval	Electrical connection [1.)]	Article no.
Metallic variant with G 1½ union nut						
12...36 V DC	C = 0.01 cm^{-1}	Digital IO-Link and büS/CANopen communication	PVC	–	5-pin M12 male connector	574248
				UL Recognized		574249
			PVDF	–		574254
				UL Recognized		–
	C = 0.1 cm^{-1}		PVC	–		574250
				UL Recognized		574251
			PVDF	–		574255
				UL Recognized		–
	C = 1.0 cm^{-1}		PVC	–		574252
				UL Recognized		574253
			PVDF	–		574256
				UL Recognized		–
Metallic variant with G ¾ external threaded						
12...36 V DC	C = 0.01 cm^{-1}	Digital IO-Link and büS/CANopen communication	–	–	5-pin M12 male connector	574257
				UL Recognized		574258
	C = 0.1 cm^{-1}			–		574259
				UL Recognized		574260
	C = 1.0 cm^{-1}			–		574261
				UL Recognized		574262
All-plastic variant with G 1½ union nut						
12...36 V DC	C = 0.01 cm^{-1}	Digital IO-Link communication	PVC	–	5-pin M12 male connector	574263
				UL Recognized		574264
			PVDF	–		574269
				UL Recognized		–
	C = 0.1 cm^{-1}		PVC	–		574265
				UL Recognized		574266
			PVDF	–		574270
				UL Recognized		–
	C = 1.0 cm^{-1}		PVC	–		574267
				UL Recognized		574268
			PVDF	–		574271
				UL Recognized		–
All-plastic variant with G ¾ external threaded						
12...36 V DC	C = 0.01 cm^{-1}	Digital IO-Link communication	–	–	5-pin M12 male connector	574272
				UL Recognized		574273
	C = 0.1 cm^{-1}			–		574274
				UL Recognized		574275
	C = 1.0 cm^{-1}			–		574276
				UL Recognized		574277

1.) Must be ordered separately (see chapter "11.5. Ordering chart accessories" on page 24): M12 female connector

DTS 1000114221 EN Version: Y Status: RL (released | freigegeben | valide) printed: 30.09.2026

valvesgo.com

11.5. Ordering chart accessories

Description	Article no.
Seals	
For ELEMENT neutrino variant	
EPDM seal for measuring device with G ¾ external thread process connection [1.)]	561955
EPDM seal for sealing between the cover and the housing	561752
Spare part	
For ELEMENT standard variant	
Opaque cover with seal (1 screw cover with EPDM seal + 1 bayonet catch cover with silicone seal)	560948
Transparent cover with seal (1 screw cover with EPDM seal + 1 bayonet catch cover with silicone seal)	561843
Electrical connection	
For all variants	
M12 female connector with plastic threaded clamping ring, 5-pin, straight, to be wired	917116
M12 female connector with moulded cable (shielded), 5-pin, straight, cable length: 2 m	438680
For ELEMENT standard variant	
M12 male connector with plastic threaded clamping ring, 5-pin, straight, to be wired	560946
M12 male connector with moulded cable (shielded), 5-pin, straight, cable length: 2 m	559177
Configuration accessory	
For ELEMENT standard variant	
Removable display/configuration module (with instruction sheet)	559168
For all variants	
Calibration solution, 250 ml, conductivity standard value: 5 µS/cm, ± 1 % accuracy	440015
Calibration solution, 250 ml, conductivity standard value: 15 µS/cm, ± 1 % accuracy	440016
Calibration solution, 250 ml, conductivity standard value: 100 µS/cm, ± 1 % accuracy	440017
Calibration solution, 250 ml, conductivity standard value: 706 µS/cm, ± 2 % accuracy	440018
Calibration solution, 250 ml, conductivity standard value: 1413 µS/cm, ± 1 % accuracy	440019
System Connect	
Type ME43 Gateway/Interface	
Industrial Ethernet gateway (PROFINET IO, EtherNet/IP, Modbus TCP, EtherCAT®)	307390
PROFIBUS gateway (PROFIBUS DPV1)	307393
Type ME61 Display	
FieldConnect 3.5" display (8.9 cm)	368544
EDIP Accessories	
USB-büS-Interface set	
USB-büS-Interface set 1 (Type 8923) Further information can be found in chapter "9. Product accessories" on page 19.	772426
USB-büS-Interface set 2 (Type 8923) Further information can be found in chapter "9. Product accessories" on page 19.	772551
Connectors	
büS M12 female connector [2.)], 5-pin, straight, A-coded	772416
büS M12 male connector [2.)], 5-pin, straight, A-coded	772417
büS M12 female connector [2.)], 5-pin, angled, A-coded	772418
büS M12 male connector [2.)], 5-pin, angled, A-coded	772419
büS Y-distributor [3.)] (M12 female connector, 5-pin to M12 male and female connectors, 5-pin)	772420
büS Y-distributor [3.)] with power interrupt (M12 female connector, 5-pin to M12 male and female connectors, 5-pin)	772421
büS adapter [3.)] (M12 male connector, 5-pin, A-coded to M12 male connector, 5-pin, A-coded)	772867
büS terminating resistor [3.)] 120 Ω, M12 male connector, 5-pin	772424
büS terminating resistor [3.)] 120 Ω, M12 female connector, 5-pin	772425

DTS 1000114221 EN Version: Y Status: RL (released | freigegeben | valide) printed: 30.09.2026

valvesgo.com

Description			Article no.
Connectors with cable			
Adapter cable with M12 female connector, 8-pin to M12 male connector, 5-pin		0.5 m	773286
M12 female connector [3.], 5-pin, angled, moulded on büS cable, with open leads		0.7 m	772626
M12 female connector [3.], 5-pin, straight, moulded on büS cable, with open leads		1 m	772409
		3 m	772410
		5 m	772411
		10 m	772412
M12 male connector [3.], 5-pin straight and micro USB connector, moulded on büS cable		0.3 m	773254
M12 female connector, 8-pin, straight, moulded on büS cable, with open leads		2 m	919061
Extensions			
	M12 female and male connectors [3.], 5-pin, straight, moulded on büS cable, shielded	0.1 m	772492
		0.2 m	772402
		0.5 m	772403
		1 m	772404
		3 m	772405
		5 m	772406
		10 m	772407
		20 m	772408
Power supply unit Type 1573 for standard rail			
100...240 V AC / 24 V DC, 1 A, class 2 according to NEC			772361
100...240 V AC / 24 V DC, 2 A, class 2 according to NEC			772362
100...240 V AC / 24 V DC, 3.8 A, class 2 according to NEC			772898
100...240 V AC / 24 V DC, 10 A			772698

1.) **Important: only use this O-ring to ensure tightness between the measuring device with G ¾ external thread and the Type S022 Insertion adapter.**
2.) The connector is also suitable for IO-Link communication.
3.) The accessory is not suitable for IO-Link communication.

DTS 1000114221 EN Version: Y Status: RL (released | freigegeben | valide) printed: 30.09.2026

valvesgo.com

valvesgo.com