Insertion adapter/fitting for ELEMENT analytical measurement devices

- Universal adapter/fitting for Type 8202 and Type 8222 ELEMENT measuring devices in pure, aggressive or contaminated liquids
- Adaptation into standard piping systems or conversion of Bürkert Type S020 fittings into Type S022 fittings
- Pipe diameters from DN 06 (with reduction) up to DN 110 (plastic) or bigger (stainless steel)

Product variants described in the data sheet may differ from the product presentation and description.

Can be combined with

Type 8222
Conductivity meter, ELEMENT design

Type 8202
pH or oxidation-reduction potential (ORP) transmitter, ELEMENT design

Type description

The adapter/fitting or analysis measurement chamber is used to connect the compact analytical ELEMENT measuring device into piping systems or vessels.

Different variants of adapters/fittings are available:

Adapters:
- PVC-U adapter to stick into equal or reduced standard metric or ASTM T-fitting
- PP adapter to weld into equal d32 standard metric T-fitting
- Stainless steel adapter for welding
- PVC threaded adapter to screw on vessel or pipe
- PVC, PP, stainless steel adapter for conversion of Type S020 Bürkert fitting into Type S022 fitting.

Fittings in PVC:
- Metric or ASTM T-fitting: true union connection or solvent end connection
- Saddle.

DTS 1000118437 EN Version: Q Status: RL (released | freigegeben | valide) printed: 21.05.2026

© Christian Bürkert GmbH & Co. KG, Subject to alteration

valvesgo.com

Table of contents

1. General technical data 3

2. Approvals and conformities 4

2.1. Conformity 4
2.2. Standards 4
2.3. Pressure Equipment Directive (PED) 4
Device used in a pipe 4
Device used in a vessel 4

3. Materials 4

3.1. Bürkert resistApp 4

4. Dimensions 5

4.1. Insertion adapter for connection into T-fitting or pipe 5
Metric solvent adapter 5
ASTM solvent adapter 6
Metric fusion adapter 6
Metric welding 6
4.2. Insertion adapter for connection on tank or pipe 7
4.3. Insertion fitting 7
Fitting with metric solvent ends connection 7
Fitting with metric or ASTM true union connection 8
Fitting with saddle 8
4.4. Adapter to convert Type S020 T-fitting to Type S022 9
4.5. Analysis measurement chamber 10

5. Performance specifications 10

5.1. Pressure temperature diagram 10

6. Product installation 11

6.1. Installation notes 11
Analysis measurement 11
6.2. Mounting options 12
Adapters mounting overview 12
Fittings mounting overview 12

7. Ordering information 13

7.1. Bürkert eShop 13
7.2. Bürkert product filter 13
7.3. Ordering chart 13
Insertion adapter for connection into T-fitting or pipe 13
Insertion adapter for connection on tank or pipe 14
Insertion fitting for connection on pipe 14
Adapter to convert Type S020 T-fitting to Type S022 14
Analysis measurement chamber 15
7.4. Ordering chart accessories 15

DTS 1000118437 EN Version: Q Status: RL (released | freigegeben | valide) printed: 21.05.2026

valvesgo.com

1. General technical data

Product properties	
Material	
Adapter	• PVC • PP • Stainless steel Delivered with 2 seals, 1 FKM and EPDM
Fitting	• Body & adapter in PVC & PVC or PP & PP • Seal in FKM or EPDM
Dimensions	Further information can be found in chapter "4. Dimensions" on page 5.
Compatibility	With pH or redox potential measuring device Type 8202 or conductivity meter Type 8222. See **data sheet Type 8202** ▶ or **Type 8222** ▶.
Pipe diameter	DN 06 (with reduction) to DN 110 (plastic) or bigger (stainless steel)
Product accessory	
Further accessory	Further information can be found in chapter "7.4. Ordering chart accessories" on page 15.
Medium data	
Fluid temperature	Temperature limits may depend on inserted measuring device [1.]. Further information can be found in chapter "5.1. Pressure temperature diagram" on page 10.
Fluid pressure	Pressure limits may depend on inserted measuring device [1.]. • PN 10 (plastic) • PN 16 (metal) Further information can be found in chapter "5.1. Pressure temperature diagram" on page 10.
Product connections	
Process connection	
Adapter	• Solvent • Fusion welding • Welding • Threaded • To connect with screws to Type S020 fitting body. Further information can be found in chapter "6.2. Mounting options" on page 12 or see **data sheet Type S020** ▶.
Fitting	• Metric or ASTM true union • Solvent ends • Saddle
Approvals and conformities	
Directives	
CE directive	Further information on the CE directive can be found in chapter "2.2. Standards" on page 4.
Pressure equipment directive	Complying with article 4, paragraph 1 of 2014/68/EU directive Further information can be found in chapter "2.3. Pressure Equipment Directive (PED)" on page 4.
Environment and installation	
Ambient temperature	Temperature limits may depend on inserted measuring device [1.].

1.) Further information can be found in the user manual or data sheet of the inserted device.

DTS 1000118437 EN Version: Q Status: RL (released | freigegeben | valide) printed: 21.05.2026

valvesgo.com

valvesgo.com

2. Approvals and conformities

2.1. Conformity

In accordance with the Declaration of Conformity, the product is compliant with the EU Directives.

2.2. Standards

The applied standards which are used to demonstrate compliance with the EU Directives are listed in the EU-Type Examination Certificate and/or the EU Declaration of Conformity.

2.3. Pressure Equipment Directive (PED)

The device conforms to article 4, paragraph 1 of the Pressure Equipment Directive (PED) 2014/68/EU under the following conditions:

Device used in a pipe

Note:

- The data in the table is independent of the chemical compatibility of the material and the fluid.
- PS = maximum admissible pressure (in bar), DN = nominal diameter of the pipe

Type of fluid	Conditions
Fluid group 1, article 4, paragraph 1.c.i	DN ≤ 25
Fluid group 2, article 4, paragraph 1.c.i	DN ≤ 32 or PS*DN ≤ 1000
Fluid group 1, article 4, paragraph 1.c.ii	DN ≤ 25 or PS*DN ≤ 2000
Fluid group 2, article 4, paragraph 1.c.ii	DN ≤ 200 or PS ≤ 10 or PS*DN ≤ 5000

Device used in a vessel

Note:

- The data in the table is independent of the chemical compatibility of the material and the fluid.
- PS = maximum admissible pressure (in bar), V = vessel volume

Type of fluid	Conditions
Fluid group 1, article 4, paragraph 1.a.i	V > 1 L and PS*V ≤ 25 bar.L or PS ≤ 200 bar
Fluid group 2, article 4, paragraph 1.a.i	V > 1 L and PS*V ≤ 50 bar.L or PS ≤ 1000 bar
Fluid group 1, article 4, paragraph 1.a.ii	V > 1 L and PS*V ≤ 200 bar.L or PS ≤ 500 bar
Fluid group 2, article 4, paragraph 1.a.ii	PS > 10 bar and PS*V ≤ 10000 bar.L or PS ≤ 1000 bar

3. Materials

3.1. Bürkert resistApp

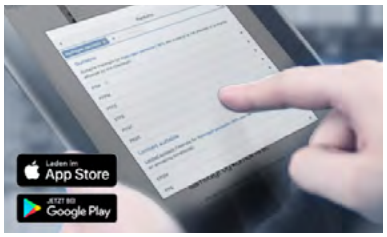

Bürkert resistApp – Chemical resistance chart

You want to ensure the reliability and durability of the materials in your individual application case? Verify your combination of media and materials on our website or in our resistApp.

Start chemical resistance check

DTS 1000118437 EN Version: Q Status: RL (released | freigegeben | valide) printed: 21.05.2026

valvesgo.com

4. Dimensions

4.1. Insertion adapter for connection into T-fitting or pipe

Note:

- Dimensions in mm, unless otherwise stated
- T-fitting to use for mounting the an adapters Type S022, shown in the following drawing.

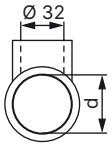

Metric solvent adapter

In PVC-U / FKM, EPDM, to stick on T-fitting d32 × 32 or d40 × 32 with solvent socket (variable d: see note at the beginning of the chapter)

With G 1½" external thread
for ELEMENT analyse device

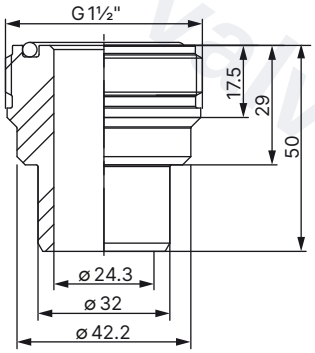

With G ¾" internal thread
for ELEMENT neutrino conductivity meter Type 8222

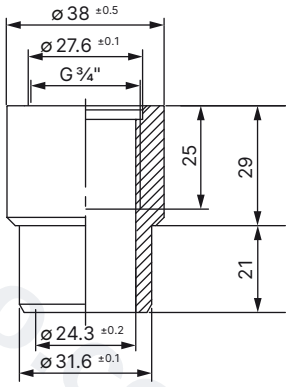

In PVC-U / FKM, EPDM, to stick on T-fitting d50 × 32 to d110 × 32 with solvent socket (variable d: see note at the beginning of the chapter)

With G 1½" external threaded
for ELEMENT analyse device

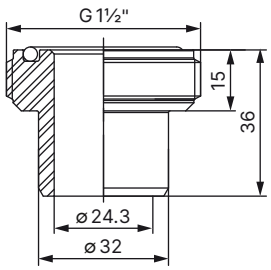

With G ¾" internal thread
for ELEMENT neutrino conductivity meter Type 8222

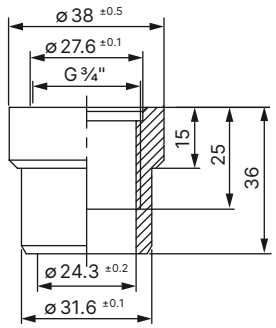

DTS 1000118437 EN Version: Q Status: RL (released | freigegeben | valide) printed: 21.05.2026

valvesgo.com

ASTM solvent adapter

In PVC-U / FKM, EPDM, to stick on T-fitting 1”x 1” to 3”x 1” with solvent socket

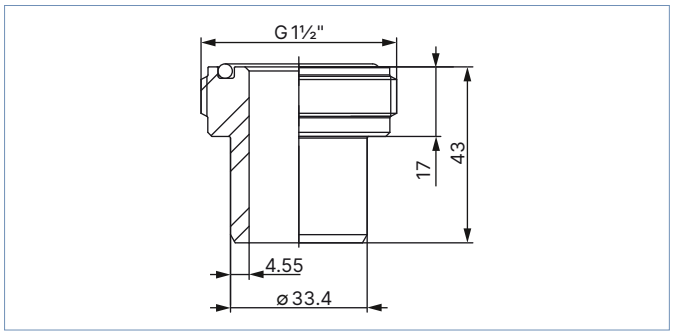

Metric fusion adapter

In PP / FKM, EPDM, to weld on T-fitting d32 × 32 with fusion socket (variable d: see note at the beginning of this chapter)

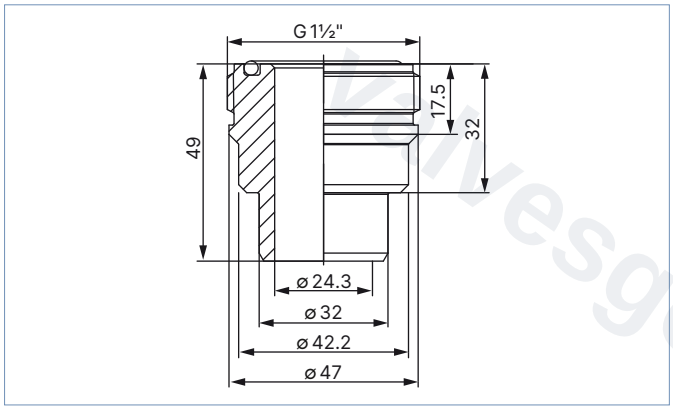

Metric welding

In stainless steel / FKM, EPDM, to weld directly on pipe[1.)]

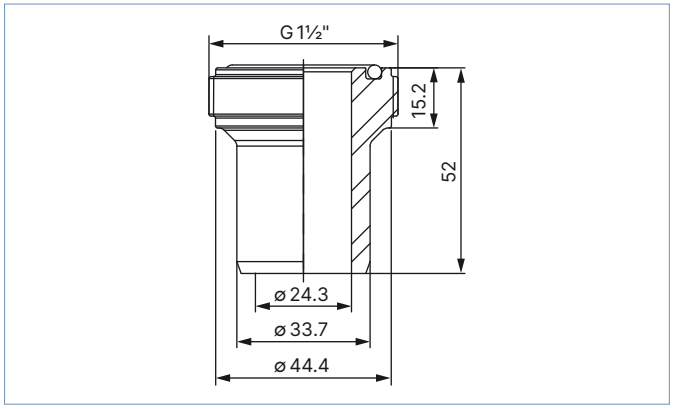

1.) May also be welded onto tanks, provided it is used in conjunction with a ELEMENT conductivity meter, Type 8222.

DTS 1000118437 EN Version: Q Status: RL (released | freigegeben | valide) printed: 21.05.2026

valvesgo.com

4.2. Insertion adapter for connection on tank or pipe

Note:
Dimensions in mm, unless otherwise stated

In PVC-U / FKM, EPDM, to screw on tank or pipe

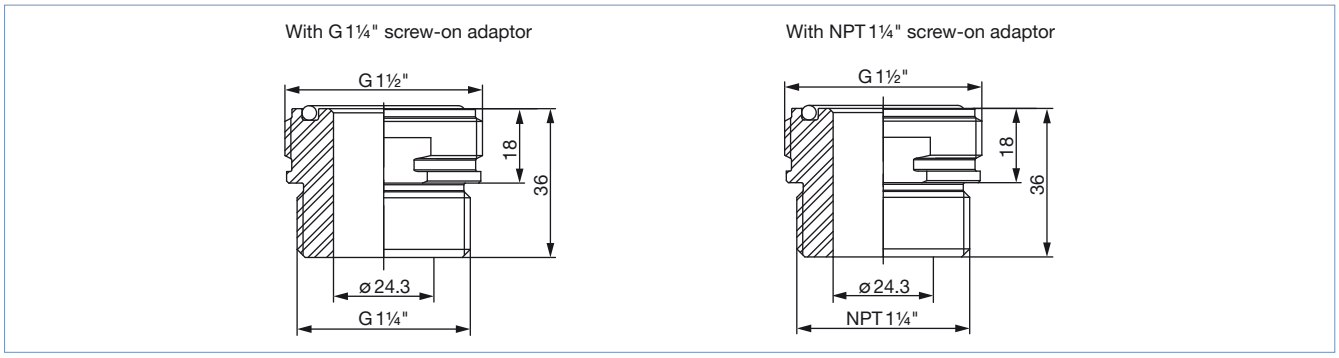

4.3. Insertion fitting

Note:
Dimensions in mm, unless otherwise stated

Fitting with metric solvent ends connection

In PVC

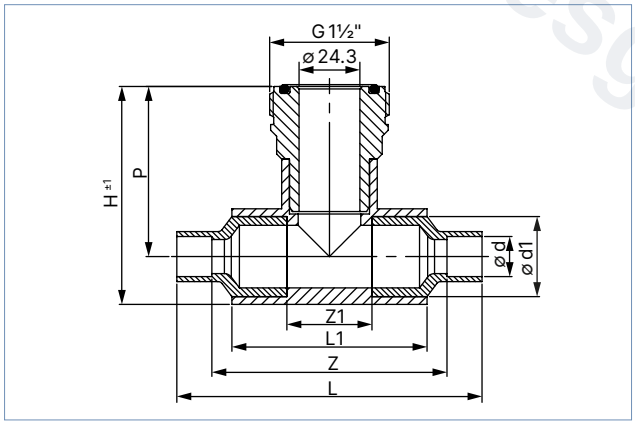

DN	P	H	L	L1	Z	Z1	Ø d	Ø d1
10	68	87	122	78	94	34	16	32
15	68	87	126	78	94	34	20	32
20	68	87	132	78	94	34	25	32
25	68	87	–	78	–	34	–	32
32	70	99	–	98	–	46	–	40
40	65	96	–	118	–	56	–	50
50	71	110	–	146	–	70	–	63
65	78	124	–	168	–	80	–	75
80	92	147	–	194	–	92	–	90
100	104	171	–	234	–	112	–	110

DTS 1000118437 EN Version: Q Status: RL (released | freigegeben | valide) printed: 21.05.2026

valvesgo.com

Fitting with metric or ASTM true union connection

Spigot and nut in PVC

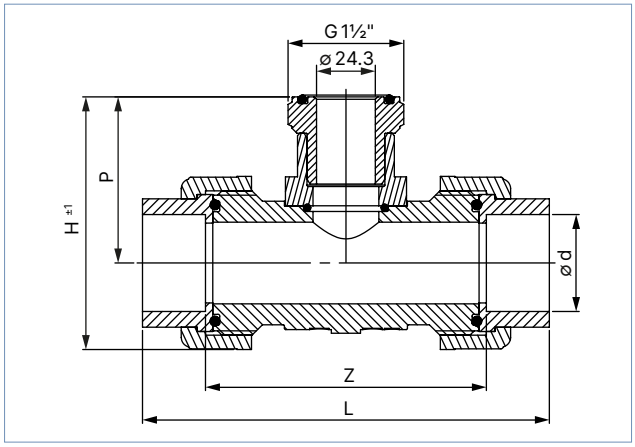

DN	P	H	Standard	L	Z	Ø d
15	69	104	Metric	148	116	20
			ASTM	162	116	½"
20	69	104	Metric	154	116	25
			ASTM	168	116	¾"
25	69	104	Metric	160	116	32
			ASTM	174	116	1"
32	69	104	Metric	168	116	40
			ASTM	170	116	1¼"
40	72	113	Metric	188	126	50
			ASTM	190	126	1½"
50	79	129	Metric	212	136	63
			ASTM	214	136	2"

Fitting with saddle

- PP body material & PP adapter
- EPDM seal material

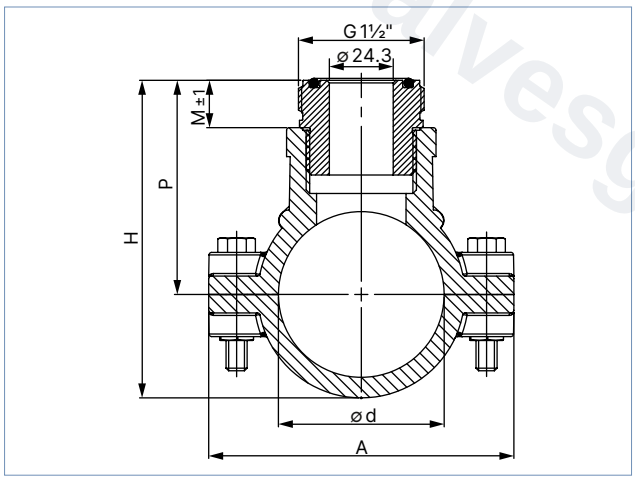

DN	M	P	H	A	Ø d
50	18	82	121	116	63
65	18	89	134	129	75
80	18	96	148	144	90
100	18	107	170	166	110
110	18	113	184	181	125

valvesgo.com

DTS 1000118437 EN Version: Q Status: RL (released | freigegeben | valide) printed: 21.05.2026

valvesgo.com

4.4. Adapter to convert Type S020 T-fitting to Type S022

Note:

- Dimensions in mm, unless otherwise stated
- Adapter for Bürkert fitting body DN 32 or bigger

In PVC-U or PP / FKM, EPDM

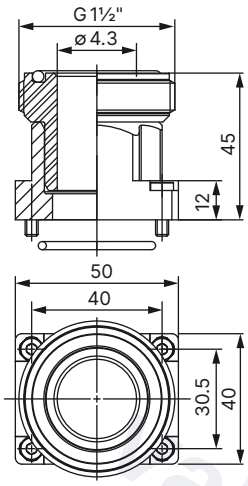

In stainless steel / FKM, EPDM

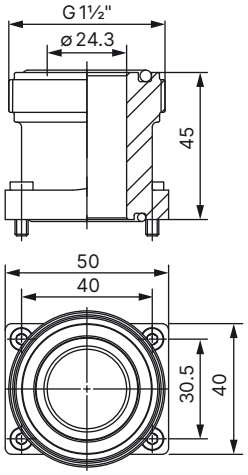

DTS 1000118437 EN Version: Q Status: RL (released | freigegeben | valide) printed: 21.05.2026

valvesgo.com

valvesgo.com

4.5. Analysis measurement chamber

Note:
Dimensions in mm, unless otherwise stated

In stainless steel 316L – 1.4404

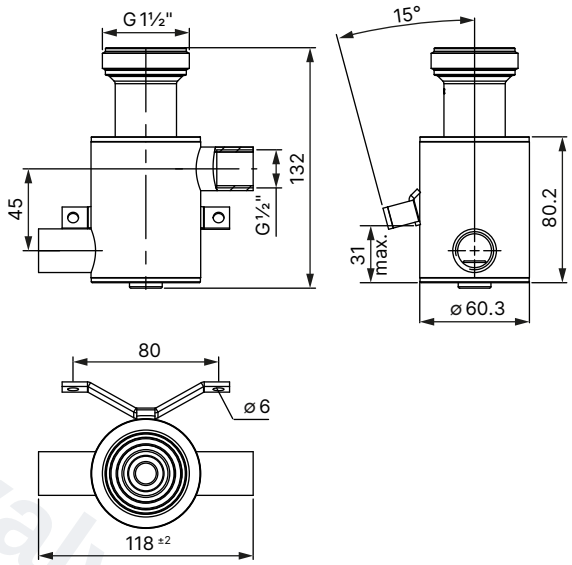

5. Performance specifications

5.1. Pressure temperature diagram

Note:
The pressure and temperature limits also depend on the measuring device inserted. Further information can be found in the user manual or data sheet of the inserted device.

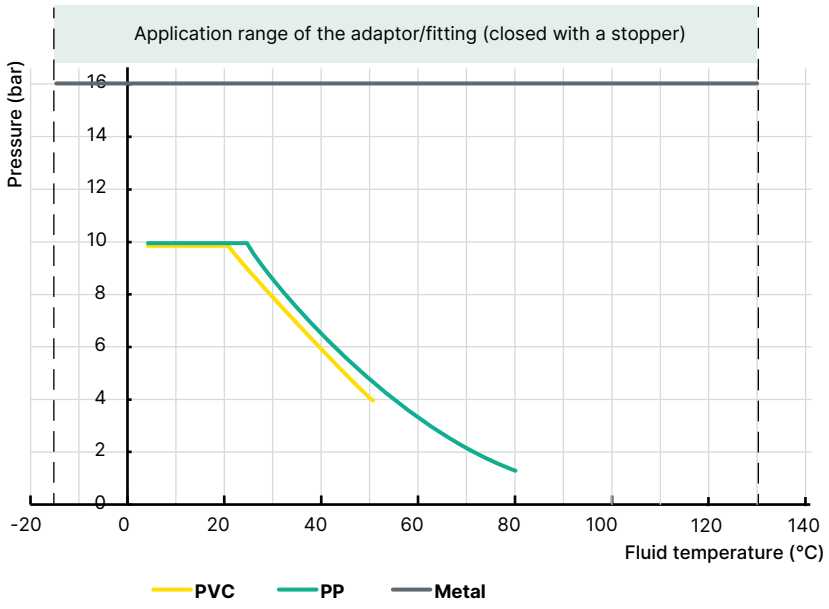

DTS 1000118437 EN Version: Q Status: RL (released | freigegeben | valide) printed: 21.05.2026

valvesgo.com

6. Product installation

6.1. Installation notes

Analysis measurement

For pH and ORP measurements, we recommend a “U”- form bypass installation to ensure that the electrode is maintained in a wet condition and enable the customer to calibrate the unit without stopping the whole process or to use the special designed analysis measurement chamber.

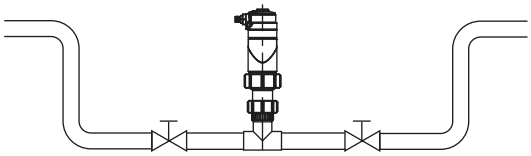

The specially designed analysis measurement chamber enables the installation of the measuring device Type 8202 or Type 8222 in all pipe systems, either directly in the main stream or in a by-pass line. Additionally it keeps the electrode always wet and isolates it easily from the main stream for calibration purposes.

It must also be ensured that:

- the pressure and temperature ratings are respected according to the selected adapter material (see chapter “5.1. Pressure temperature diagram” on page 10).
- the sensor element is completely covered with liquid. Avoid dead legs which interfere with the local fluid exchange.

When mounting the adapter into a T-fitting, a tank or directly into a pipe, please ensure that the minimum immersion depth of the electrode of the measuring device used is respected (refer to the following drawing). The installation recommendations for the pH/ORP meter Type 8202 do not allow mounting the adapter for this measuring device on a tank.

Type S022 used with Type 8202 pH/O.R.P. meter

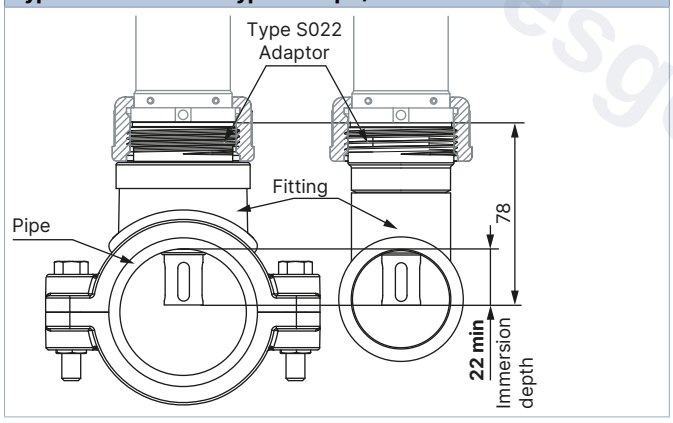

Type S022 used with Type 8222 conductivity meter with C = 0.01 or 0.1

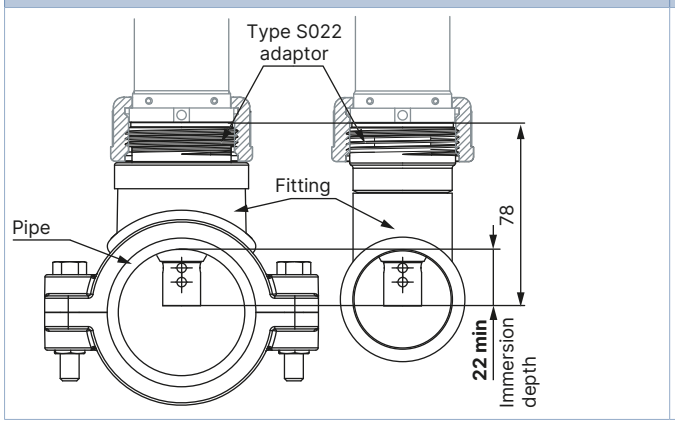

Type S022 used with Type 8222 conductivity meter with C = 1

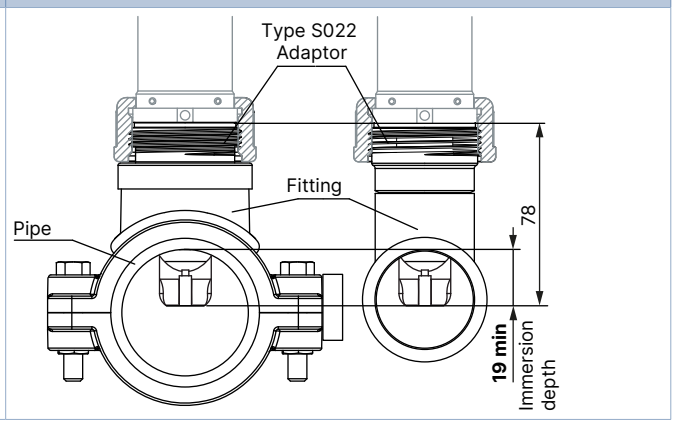

DTS 1000118437 EN Version: Q Status: RL (released | freigegeben | valide) printed: 21.05.2026

valvesgo.com

6.2. Mounting options

Adapters mounting overview

Adapter Type S022				
	PVC-U, PP, metric or ASTM	**Stainless steel**	**PVC-U, G or NPT 1¼ screw-on**	**PVC-U, PP or stainless steel**
For connection on piping systems		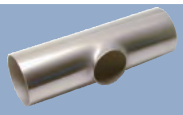	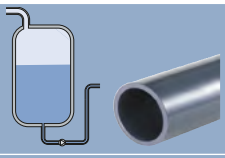	
	Fitting and reduction not supplied			Bürkert fitting body Type S020
Final products		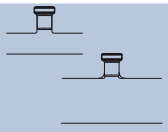	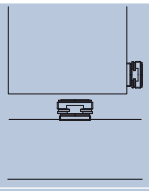	
DN	32...110 (06...25 with reduction)	Respect recommendations for installation. Further information can be found in chapter "6.1. Installation notes" on page 11.	Respect recommendations for installation. Further information can be found in chapter "6.1. Installation notes" on page 11.	For Bürkert fitting body ≥ DN 32 or analytical true union fitting (DN 15...DN 25)

Fittings mounting overview

Fitting Type S022			
	PVC / FKM, metric	**PVC / FKM, metric or ASTM**	**PP body & PP adapter / EPDM**
For connection on piping systems	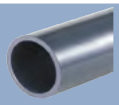	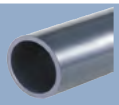	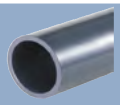
DN	10...100	15...50	50...110

valvesgo.com

DTS 1000118437 EN Version: Q Status: RL (released | freigegeben | valide) printed: 21.05.2026

valvesgo.com

7. Ordering information

7.1. Bürkert eShop

Bürkert eShop – Easy ordering and quick delivery

You want to find your desired Bürkert product or spare part quickly and order directly? Our online shop is available for you 24/7. Sign up and enjoy all the benefits.

Order online now

7.2. Bürkert product filter

Bürkert product filter – Get quickly to the right product

You want to select products comfortably based on your technical requirements?
Use the Bürkert product filter and find suitable articles for your application quickly and easily.

Try out our product filter

7.3. Ordering chart

Insertion adapter for connection into T-fitting or pipe

Insertion adapter	Description	Material Body / Seal [1.)]	Type of installation	Article no.
	Metric solvent adapter with G 1½" external thread for ELEMENT measuring device connection	PVC-U / FKM, EPDM	To stick on T-fitting d32 × 32 or d40 × 32 with solvent socket	560705
	Metric solvent adapter with G ¾" internal thread for ELEMENT neutrino conductivity meter, Type 8222, connection	PVC-U / FKM, EPDM	To stick on T-fitting d32 × 32 or d40 × 32 with solvent socket	568931
	Metric solvent adapter with G 1½" external thread for ELEMENT measuring device connection	PVC-U / FKM, EPDM	To stick on T-fitting d50 × 32 to d50...110 × 32 with solvent socket	560706
	Metric solvent adapter with G ¾" internal thread for ELEMENT neutrino conductivity meter, Type 8222, connection	PVC-U / FKM, EPDM	To stick on T-fitting d50 × 32 to d50...110 × 32 with solvent socket	568932
	ASTM solvent adapter with G 1½" external thread for ELEMENT measuring device connection	PVC-U / FKM, EPDM	To stick on T-fitting 1" x 1" to 3" x 1" with solvent socket	561227
	Metric fusion adapter with G 1½" external thread for ELEMENT measuring device connection	PP / FKM, EPDM	To weld on T-fitting d32 × 32 with fusion socket	561229
	Metric welding adapter Ø 33.7 with G 1½" external thread for ELEMENT measuring device connection	Stainless steel / FKM, EPDM	To weld directly on pipe[2.)]	561232

1.) The following is supplied with every adapter: 1 FKM and 1 EPDM seals for the measuring device connection.
2.) May also be welded onto tanks, provided it is used in conjunction with a ELEMENT conductivity meter, Type 8222.

DTS 1000118437 EN Version: Q Status: RL (released | freigegeben | valide) printed: 21.05.2026

valvesgo.com

Insertion adapter for connection on tank or pipe

Insertion adapter	Description	Material Body / Seal [1.)]	Type of installation	Article no.
	G 1¼" screw-on adapter with G 1½" external thread for ELEMENT measuring device connection	PVC-U / FKM, EPDM	To screw on tank[2.)] or pipe	560707
	NPT 1¼" screw-on adapter with G 1½" external thread for ELEMENT measuring device connection	PVC-U / FKM, EPDM	To screw on tank[2.)] or pipe	561228

1.) The following is supplied with every adapter: 1 FKM and 1 EPDM seals for the measuring device connection.
2.) Provided it is used in conjunction with a ELEMENT conductivity meter, Type 8222.

Insertion fitting for connection on pipe

Insertion fitting	Description	Material Body / Seal	DN	Article no.
	Fitting with metric solvent ends connection with G 1½" external thread for ELEMENT measuring device connection	PVC / FKM	10	559640
			15	559641
			20	559642
			25	559643
			32	559644
			40	559645
			50	559646
			65	559647
			80	559648
			100	559649
	Fitting with metric true union connection with spigot and nut for pipe connection and with G 1½" external thread for ELEMENT measuring device connection	PVC / FKM	15	560671
			20	560672
			25	560673
			32	560674
			40	560675
			50	560676
	Fitting with ASTM true union connection with spigot and nut for pipe connection and with G 1½" external thread for ELEMENT measuring device connection	PVC / FKM	15	560691
			20	560692
			25	560693
			32	560694
			40	560695
			50	560696
	Fitting with saddle with G 1½" external thread for ELEMENT measuring device connection	PP body & PP adapter / EPDM	50	560700
			65	560701
			80	560702
			100	560703
			110	560704

Adapter to convert Type S020 T-fitting to Type S022

Adapter	Description	Material Body / Seal [1.)]	Type of installation	Article no.
	Adapter with G 1½" external thread for ELEMENT measuring device connection	PVC-U / FKM, EPDM	For Bürkert fitting body ≥ DN 32 [2.)]	560854
	Adapter with G 1½" external thread for ELEMENT measuring device connection	PP / FKM, EPDM	For Bürkert fitting body ≥ DN 32 [2.)]	561230
	Adapter with G 1½" external thread for ELEMENT measuring device connection	Stainless steel / FKM, EPDM	For Bürkert fitting body ≥ DN 32 [2.)]	561233

1.) The following is supplied with every adapter: 1 FKM and 1 EPDM seals for the measuring device connection.
2.) Or with true union fitting (DN 15...DN 25) in analysis variant

DTS 1000118437 EN Version: Q Status: RL (released | freigegeben | valide) printed: 21.05.2026

valvesgo.com

Analysis measurement chamber

Description		Material Body	Type of installation	Article no.
	Analysis measurement chamber with G 1½" external thread for ELEMENT measuring device connection	Stainless steel 316L – 1.4404	Pipe connection: G ½"	563552

Further variants on request	
	Material PVDF with seal made of FKM or EPDM

7.4. Ordering chart accessories

Accessories	No.	Description		Article no.
Metal adaptor 	–	Sealing plug made of stainless steel with union nut and O-ring (EPDM and FKM)		562625
	–	Sealing plug made of in PVC with union nut and O-ring (EPDM and FKM)		562541
	Seal set			
	1	O-ring made of FKM for metal adapter		561654
	1	O-ring made of EPDM for metal adapter		561653
Plastic adaptor, Solvent end fittings and saddle 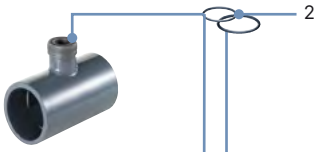	**2**	O-ring made of FKM for plastic adapter, solvent end fittings and saddle		561399
	2	O-ring made of EPDM for plastic adapter, solvent end fittings and saddle		561398
	3	O-ring [1.] made of FKM for plastic adapter or true union fitting	DN 15...DN 32	431558
			DN 40	431559
			DN 50	431560
Plastic adaptor for conversion or true union fitting 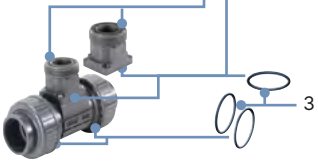	**3**	O-ring [1.] made of EPDM for plastic adapter or true union fitting	DN 15...DN 32	431564
			DN 40	431565
			DN 50	431566

1.) The O-ring is only intented for fitting body with flat bottom groove. The O-ring is not suitable for fitting body with ribbed groove (old variant).

DTS 1000118437 EN Version: Q Status: RL (released | freigegeben | valide) printed: 21.05.2026

valvesgo.com