bürkert
FLUID CONTROL SYSTEMS

MAN 1000361981 EN Version: D Status: RL (released | freigegeben) printed: 24.08.2026

Type S022

valvesgo.com

Insertion adaptor or fitting for ELEMENT measuring devices

Operating Instructions

MAN 1000361981 EN Version: D Status: RL (released | freigegeben) printed: 24.08.2026

valvesgo.com

We reserve the right to make technical changes without notice.
© Bürkert SAS 2009-2025
Technical documentation 2508/04_GBen_00561327_1044764171_18014399554728587 / Original EN

Table of contents

1 About this document 4
1.1 Symbols 4
1.2 Terms and abbreviations 5
1.3 Manufacturer 5

2 Safety 6
2.1 Intended use 6
2.2 Safety instructions 6

3 Technical data 8
3.1 Standards and directives 8
3.2 Conditions of use 8
3.3 Conformity to the pressure equipment directive 9
3.4 Dimensions 9
3.5 Mechanical data of adapters 10

4 Installation and commissioning 12
4.1 Safety instructions 12
4.2 Installation onto the pipe 13
4.2.1 Recommandations for installing the product on the pipe 13
4.2.2 Installation of a PVC-U or PP, metric or ASTM adapter on a T-fitting 16
4.2.3 Installation of a stainless steel metric adapter on a vessel or on a pipe 16
4.2.4 Installation of an adapter with G 1¼'' or NPT 1¼'' external threading on a vessel, a pipe or a saddle 16
4.2.5 Replace the adapter of an S020 T-fitting with an S022 adapter with G 1½" external thread 17
4.2.6 Installation of a PVC true union connection on a pipe 17
4.2.7 Installation of a PVC fitting with weld-end connections on a pipe 18
4.2.8 Installation of a saddle on a pipe 19
4.2.9 Installation of a measurement chamber 19

5 Maintenance and troubleshooting 20
5.1 Safety instructions 20
5.2 Cleaning 20

6 Spare parts and accessories 21

7 Logistics 23
7.1 Transport and storage 23
7.2 Return 23
7.3 Disposal 23

MAN 1000361981 EN Version: D Status: RL (released | freigegeben) printed: 24.08.2026

valvesgo.com

1 About this document

The document is an important part of the product and guides the user to safe installation and operation. The information and instructions in this document are binding for the use of the product.

- Before using the product for the first time, read and observe the whole safety chapter.
- Before starting any work on the product, read and observe the respective sections of the document.
- Keep the document available for reference and give it to the next user.
- Contact the Bürkert sales office for any questions.

Further information concerning the product at Products.

- Enter the article number from the type label in the search bar.

The illustrations in these instructions may vary depending on the product variant.

1.1 Symbols

DANGER!

Warns of a danger that leads to death or serious injuries.

WARNING!

Warns of a danger that can lead to death or serious injuries.

CAUTION!

Warns of a danger that can lead to minor injuries.

NOTICE!

Warns of property damage on the product or the installation.

Indicates important additional information, tips and recommendations.

Refers to information in this document or in other documents.

- Indicates a step to be carried out.

✓ Indicates a result.

Menu Indicates a software user-interface text.

MAN 1000361981 EN Version: D Status: RL (released | freigegeben) printed: 24.08.2026

valvesgo.com

1.2 Terms and abbreviations

The terms and abbreviations are used in this document to refer to following definitions.

Product	Type S022 fitting or Type S022 adapter or Type S022 measurement chamber

1.3 Manufacturer

Bürkert SAS

20, rue du Giessen

67220 TRIEMBACH-AU VAL

FRANCE

The contact addresses are available at Contact.

Need more information or additional products?

- Explore the full range of products on our eShop.

valvesgo.com

MAN 1000361981 EN Version: D Status: RL (released | freigegeben) printed: 24.08.2026

valvesgo.com

2 Safety

2.1 Intended use

Use of the product that does not comply with the instructions could present risks to people, nearby installations and the environment.

The Type S022 fitting and the Type S022 adpater are intended for the installation of ELEMENT insertion measuring devices (Type 8202 or 8222) for measuring the pH, the oxidation reduction potential (ORP) or the conductivity on a pipe.

The Type S022 measurement chamber is intended on the one hand, to install an ELEMENT insertion measuring device (Type 8202 or 8222) in a pipe and, on the other hand, to guarantee that the measurement sensor of the measuring device is fully covered by the fluid.

- Use the product in compliance with the specifications and conditions of commissioning and use given in the contractual documents, in the Operating Instructions of the product and in the Operating Instructions of the combined instrument.
- Store, transport, install and operate the product properly.
- Only operate a product in perfect working order.
- Only use this product as intended.

2.2 Safety instructions

This safety information does not take into account any contingencies or occurences that may arise during installation, use and maintenance of the product.

The operating company is responsible for the respect of the local safety regulations including staff safety.

Risk of injury due to high pressure in the installation.

Risk of burns due to high temperatures of the fluid.

Risk of injury due to the nature of the fluid.

Various dangerous situations

- Prevent any unintentional power supply switch-on.
- Ensure that installation and maintenance work are carried out by qualified, authorised personnel in possession of the appropriate tools.
- Guarantee a set or controlled restarting of the process, after a power supply interruption.
- Use the product only if in perfect working order and in compliance with the instructions provided in the Operating Instructions.
- Observe the general technical rules when installing and using the product.
- Do not use the product in explosive atmospheres.
- Do not use fluid that is incompatible with the materials from which the product is made.
- Do not use the product in an environment incompatible with the materials from which it is made.
- Do not subject the product to mechanical loads.
- Do not make any modifications to the product.

MAN 1000361981 EN Version: D Status: RL (released | freigegeben) printed: 24.08.2026

valvesgo.com

The product may be damaged by the measured fluid

- Systematically check the chemical compatibility of the component materials of the product and the fluids likely to come into contact with the materials of the product (for example: alcohols, strong or concentrated acids, aldehydes, alkaline compounds, esters, aliphatic compounds, ketones, halogenated aromatics or hydrocarbons, oxidants and chlorinated agents).

MAN 1000361981 EN Version: D Status: RL (released | freigegeben) printed: 24.08.2026

valvesgo.com

3 Technical data

3.1 Standards and directives

This product complies with the legal requirements applicable at the time of placing on the market and has been developed and tested in accordance with the relevant European directives/regulations and harmonized standards. The conformity is documented and, if necessary, supported by evidence. The EU Declaration of Conformity can be found behind the respective type on the home page country.burkert.com

3.2 Conditions of use

Fluid temperature	depends on the device inserted into the Type S022. Refer to the re-leated Operating Instructions.
Ambient temperature	Dedepends on the device inserted and the materials from which the product is made. Refer to the related Operating Instructions and to the diagram in Safety instructions [▸ 12]. If the ranges are different, use the most restrictive range.
Pressure class	depends on the device inserted and the material from which the product is made. Refer to the related Operating Instructions and to the diagram in Safety instructions [▸ 12]. If the pressure classes are different, take the lowest value into account.
Storage temperature	–15...+60°C

MAN 1000361981 EN Version: D Status: RL (released | freigegeben) printed: 24.08.2026

valvesgo.com

valvesgo.com

3.3 Conformity to the pressure equipment directive

- Make sure the product materials are compatible with the fluid.
- Make sure the pipe DN and the PN are adapted for the product.

The product conforms to Article 4, Paragraph 1 of the Pressure Equipment Directive 2014/68/EU under the following conditions:

Product used on a piping

(PS = maximum admissible pressure; DN = nominal diameter of the pipe)

Type of fluid	Conditions
Fluid group 1, Article 4, Paragraph 1.c.i	DN ≤ 25
Fluid group 2, Article 4, Paragraph 1.c.i	DN ≤ 32 or PSxDN ≤ 1000
Fluid group 1, Article 4, Paragraph 1.c.ii	DN ≤ 25 or PSxDN ≤ 2000
Fluid group 2, Article 4, Paragraph 1.c.ii	DN ≤ 200 or PS ≤ 10 or PSxDN ≤ 5000

Product used on a vessel

(PS = maximum admissible pressure)

Type of fluid	Conditions
Fluid group 1, Article 4, Paragraph 1.a.i	PS ≤ 200 bar
Fluid group 2,Article 4, Paragraph 1.a.i	PS ≤ 1000 bar
Fluid group 1, Article 4, Paragraph 1.a.ii	PS ≤ 500 bar
Fluid group 2, Article 4, Paragraph 1.a.ii	PS ≤ 1000 bar

3.4 Dimensions

Refer to the related datasheet at country.burkert.com

MAN 1000361981 EN Version: D Status: RL (released | freigegeben) printed: 24.08.2026

valvesgo.com

3.5 Mechanical data of adapters

	Description	Body / Seal materials[1]	Installation type
	Metric solvent adapter, with G 1½" external thread for the connection of the measuring device	PVC-U / FKM, EPDM	To be stuck to a T-fitting d32x32 or d40x32 with solvent socket 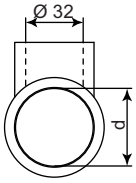
	Metric solvent adapter, with G 1½" external thread for the connection of the measuring device	PVC-U / FKM, EPDM	To be stuck to a T-fitting d50x32 or d110x32 with solvent socket 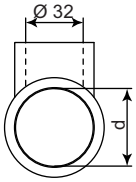
	ASTM solvent adapter, with G 1½" external thread for the connection of the measuring device	PVC-U / FKM, EPDM	To be stuck to a T-fitting 1"x1" or 3"x1" with solvent socket
	Metric fusion adapter, with G 1½" external thread for the connection of the measuring device	PP / FKM, EPDM	To be welded to a T-fitting d32x32 with fusion socket 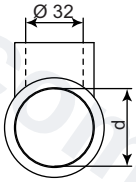
	Metric welding adapter Ø 33.7 with G 1½" external thread for the connection of the measuring device	Stainless steel / FKM, EPDM	To be directly welded onto the pipe
	G 1¼" screw-on adapter with G 1½" external thread for the connection of the measuring device	PVC-U / FKM, EPDM	To be screwed on a vessel, a pipe or a saddle
	NPT 1¼" screw-on adapter with G 1½" external thread for the connection of the measuring device	PVC-U / FKM, EPDM	To be screwed on a vessel, a pipe or a saddle
	Adapter with G 1½" external thread for the connection of the measuring device	PVC-U / FKM, EPDM	To be screwed onto a Bürkert fitting body - DN32 or more

[1] 1 FKM seal and 1 EPDM seal are delivered with each adapter: use one or the other to render the interface between the adapter and measuring device leak proof or the Bürkert fitting leak proof.

MAN 1000361981 EN Version: D Status: RL (released | freigegeben) printed: 24.08.2026

valvesgo.com

valvesgo.com

	Description	Body / Seal materials[1)]	Installation type
	Adapter with G 1½" external thread for the connection of the measuring device	PP / FKM, EPDM	To be screwed onto a Bürkert fitting body - DN32 or more
	Adapter with G 1½" external thread for the connection of the measuring device	Stainless steel / FKM, EPDM	To be screwed onto a Bürkert fitting body - DN32 or more

valvesgo.com

MAN 1000361981 EN Version: D Status: RL (released | freigegeben) printed: 24.08.2026

4 Installation and commissioning

4.1 Safety instructions

DANGER!

Risk of injury due to high pressure in the installation.

- Stop the circulation of fluid, cut off the pressure and drain the pipe before loosening the process connections.

DANGER!

Risk of burns due to high fluid temperatures.

- Do not touch with bare hands the parts of the product that are in contact with the fluid.
- Stop the circulation of fluid and drain the pipe before loosening the process connections.

DANGER!

Risk of injury due to the nature of the fluid.

- Respect the prevailing regulations on accident prevention and safety relating to the use of dangerous fluids.

WARNING!

Risk of injury due to non-conforming installation.

- Fluid installation must only be carried out by qualified and authorised personnel with the appropriate tools.
- Observe the installation instructions for the measuring device inserted into the product.

WARNING!

Risk of injury due to an uncontrolled restart.

- Ensure that the restart of the installation is controlled after any interventions on it.

WARNING!

Risk of injury if the fluid pressure / temperature dependency is not respected.

- Take into account the dependency between the fluid pressure and the fluid temperature according to the materials from which the product is made (see following diagram) and to the measuring device used (see the related Operating Instructions).
- Observe the Pressure Equipment Directive 2014/68/EU.

MAN 1000361981 EN Version: D Status: RL (released | freigegeben) printed: 24.08.2026

valvesgo.com

WARNING!

Danger due to non-conforming commissioning.

Non-conforming commissioning may lead to injuries and damage the product and its surroundings.

- Before commissioning, make sure that the staff in charge have read and fully understood the contents of the Operating Instructions.
- In particular, observe the safety recommendations and intended use.
- The installation must only be commissioned by suitably trained staff.

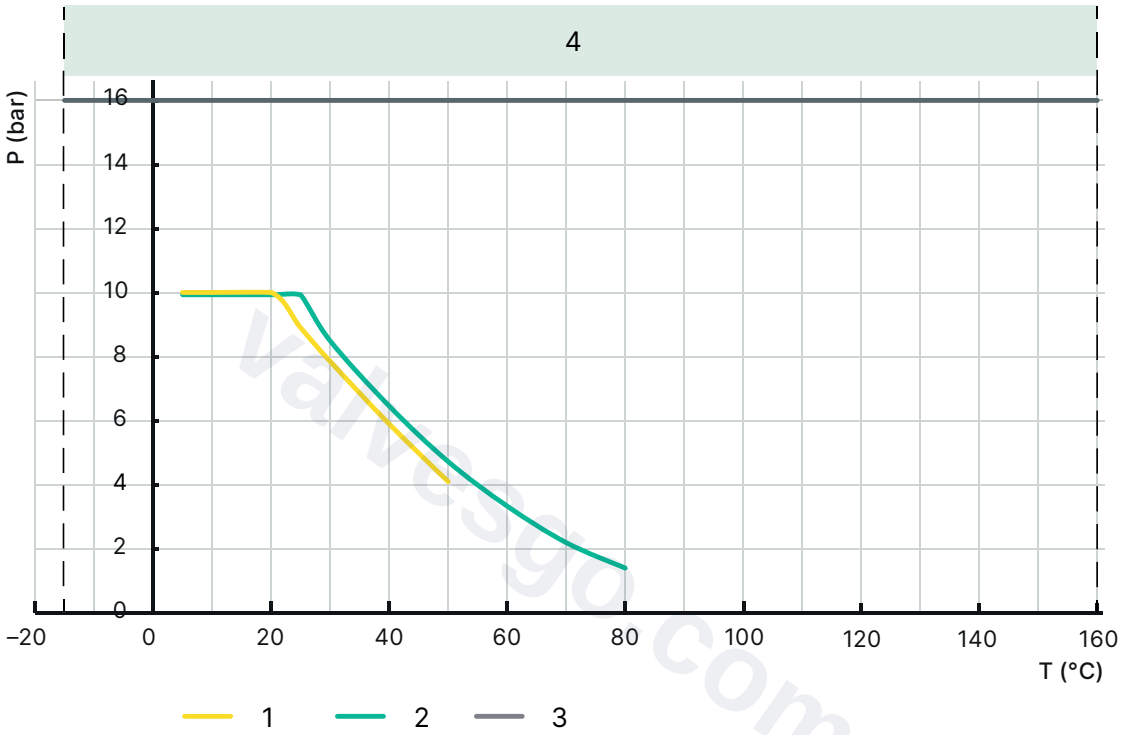

Fig. 1: Fluid pressure / fluid temperature dependency curve for Type S022 adapters and fittings

1	PVC	2	PP
3	Metal	4	Application range of the adaptor/fitting (closed with a stopper)

4.2 Installation onto the pipe

4.2.1 Recommandations for installing the product on the pipe

- To measure the pH or the oxidation reduction potential, install a U-shaped bypass in order to prevent the electrode drying out and to allow calibration without stopping the process.

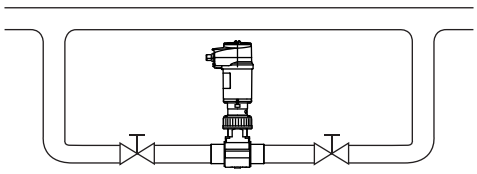

Fig. 2: Bypass installation of the product

MAN 1000361981 EN Version: D Status: RL (released | freigegeben) printed: 24.08.2026

- For all types of measurement, respect the following additional assembly conditions to ensure that the measuring device operates correctly:
- Respect the minimum distance between the measuring device and an injection point.

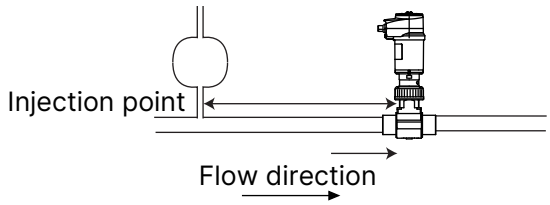

Fig. 3: Minimum distance between the measuring device and an injection point

- Prevent the formation of air bubbles in the pipe in the section around the product.

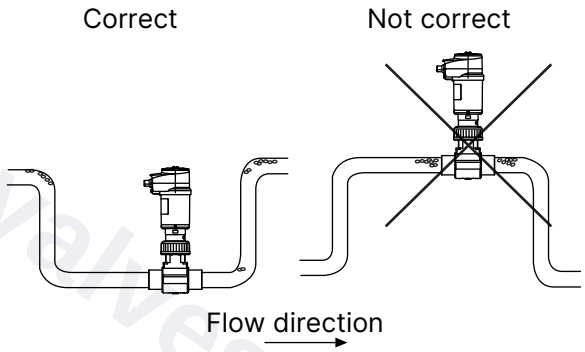

Fig. 4: Air bubbles in the pipe

- Ensure that the pipe is always filled in the section around the product.

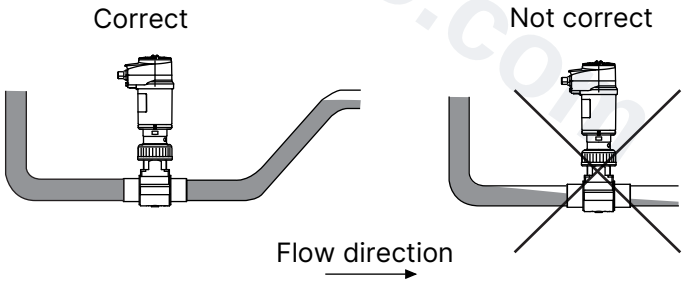

Fig. 5: Filling of the pipe

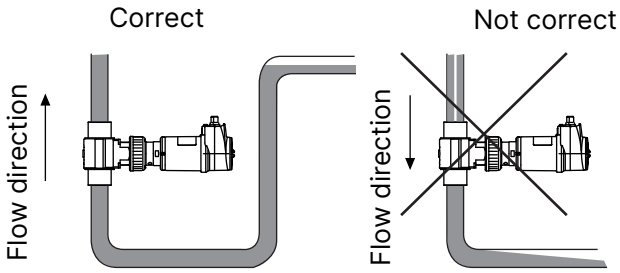

Fig. 6: Filling of the pipe, when using a Type 8222 conductivity meter installed horizontally

MAN 1000361981 EN Version: D Status: RL (released | freigegeben) printed: 24.08.2026

valvesgo.com

- Make sure the minimum insertion depth of the measuring electrode is respected when installing the S022 adapter on a T-fitting, a vessel or directly onto the pipe. The minimum insertion depth depends on the type of the inserted device.

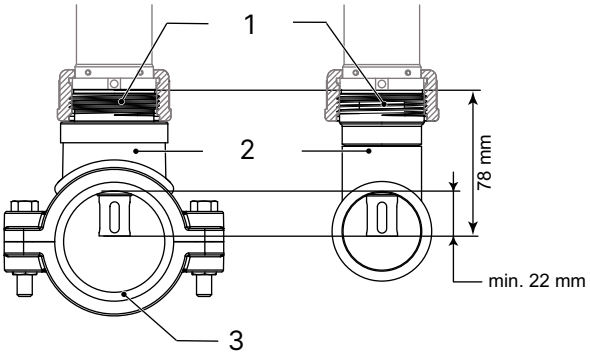

Fig. 7: Insertion of 22 mm minimum of the electrode on a Type 8202 pH-/Redox-meter

1 S022 adapter	2 Fitting
3 Pipe	

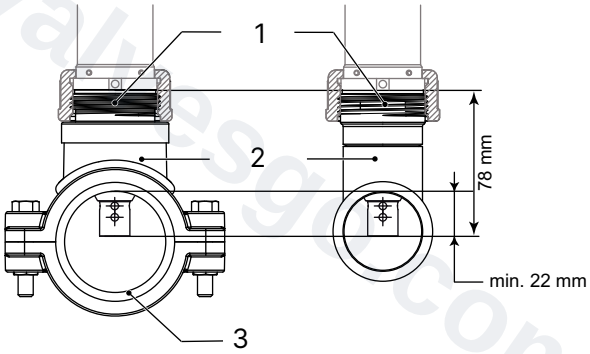

Fig. 8: Insertion of 22 mm minimum of electrode C = 0.1 or 0.01 on an Type 8222 conductivity meter

1 S022 adapter	2 Fitting
3 Pipe	

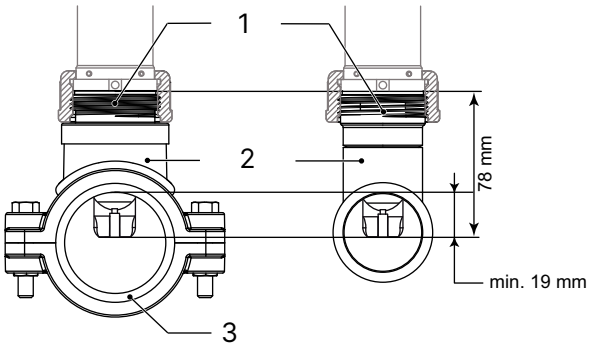

Fig. 9: Insertion of 19 mm minimum of the electrode on an Type 8222 conductivity meter

1 S022 adapter	2 Fitting
3 Pipe	

MAN 1000361981 EN Version: D Status: RL (released | freigegeben) printed: 24.08.2026

valvesgo.com

4.2.2 Installation of a PVC-U or PP, metric or ASTM adapter on a T-fitting

1 S022 adapter	2 Metric adapter stuck

- Stick the PVC-U adapter to a T-fitting of appropriate dimensions in PVC-U, or
- Weld the PP adapter to a T-fitting d32x32 in PP with weld ends

4.2.3 Installation of a stainless steel metric adapter on a vessel or on a pipe

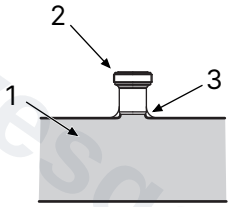

1 Pipe	2 S022 adapter
3 Weld	

- Drill the vessel or pipe to a suitable diameter.
- Weld the stainless steel adapter directly onto the vessel or pipe.

4.2.4 Installation of an adapter with G 1¼" or NPT 1¼" external threading on a vessel, a pipe or a saddle

- To make sure the assembly is tight and strong, install the product on a pipe or on a vessel with a wall thickness of min. 4 mm.

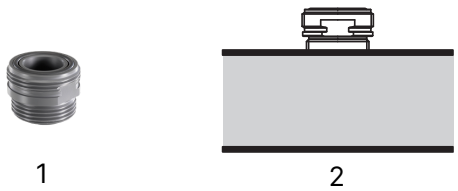

1 S022 adapter with external thread	2 Adapter with external thread, installed on a pipe

- Drill and thread the vessel or the pipe to a suitable diameter.
- Screw the PVC-U adapter directly onto the vessel, the pipe or the saddle.

MAN 1000361981 EN Version: D Status: RL (released | freigegeben) printed: 24.08.2026

valvesgo.com

- Render leak proof using a suitable material.

4.2.5 Replace the adapter of an S020 T-fitting with an S022 adapter with G 1½" external thread

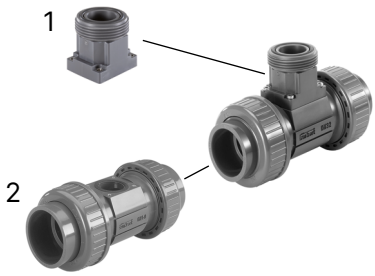

1 S022 adapter	2 S020 T-fitting body

- Unscrew the 4 screws of the S020 adapter and remove it from the fitting.
- Remove the seal in place.
- Clean the surfaces on which the seal rests.
- Insert the O-ring, delivered with the S022, under the fitting body.
- Position the S022 adapter on the S020 T-fitting body.
- Insert the 4 screws into the adapter.
- Tighten the 4 screws in an alternating pattern to a torque of 1.5 N·m (1.1 ft·lbf).

4.2.6 Installation of a PVC true union connection on a pipe

Use a PVC appropriate glue and respect the glue manufacturer's instructions.

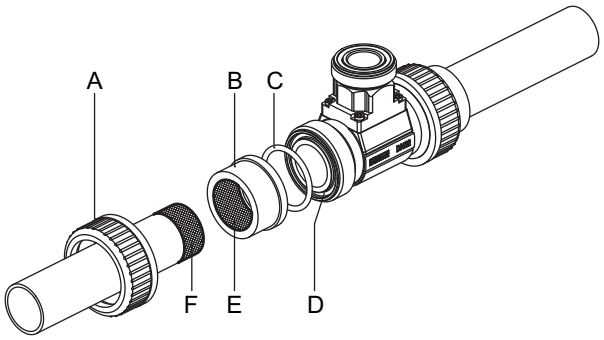

- Roughen the surface "F" and the internal surface "E" of the workpiece "B" with an emery cloth.
- Wipe the surfaces"E" and "F" with blotting paper.
- Scour the surfaces "E" and "F" then clean them with blotting paper.
- Let dry.
- Eliminate any trace of humidity due to condensation.
- Insert the "A" nut on the pipe.
- Apply a layer of glue on surface "E".

MAN 1000361981 EN Version: D Status: RL (released | freigegeben) printed: 24.08.2026

valvesgo.com

- Apply a thicker layer of glue on surface "F", strongly pressing the brush in the direction of the axis.
- Assemble the 2 glued workpieces to the stop, keeping them aligned and without turning the workpieces.
- Keep the workpieces together until the glue sets.
- Immediately remove the unwanted adhesive with blotting paper.
- Insert seal "C" into groove "D".
- Put the previously glued assembly on the seal.
- Screw nut "A" with the hand to make the assembly solid.
- Before charging the pipe let the assembly dry for at least 15 hours.

4.2.7 Installation of a PVC fitting with weld-end connections on a pipe

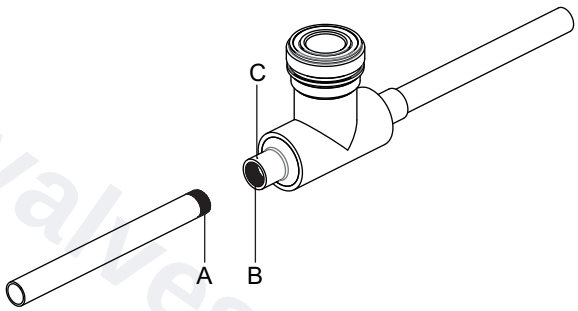

- Take the glass off the surface "A" and the internal surface "B" of the connection "C" of the fitting with emery cloth.
- Wipe the surfaces"A" and "B" with blotting paper.
- Scour the surfaces "A" and "B" then clean them with blotting paper.
- Let dry.
- Eliminate any trace of humidity due to condensation.
- Coat the surface "A" with glue.
- Apply a thicker layer of glue on surface "B", strongly pressing the brush in the direction of the axis.
- Assemble the 2 glued workpieces to the stop, keeping them aligned and without turning the workpieces.
- Keep the workpieces together until the glue sets.
- Immediately remove the unwanted adhesive with blotting paper.
- Before charging the pipe let the assembly dry for at least 15 hours.

MAN 1000361981 EN Version: D Status: RL (released | freigegeben) printed: 24.08.2026

valvesgo.com

4.2.8 Installation of a saddle on a pipe

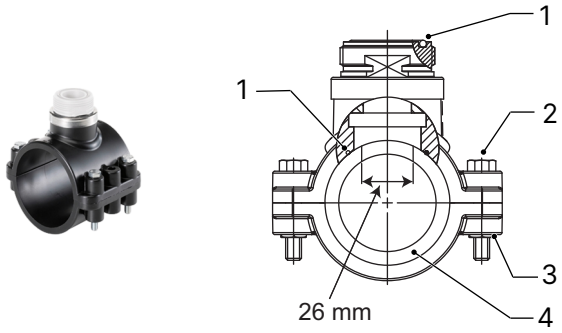

1	Seal	2	Screws
3	Nut	4	Pipe

- Drill a hole 26 mm in diameter in the pipe.
- Insert the seal provided in the saddle groove.
- Fix the saddle to the pipe.
- Insert the nuts into their housing.
- Insert the screws into the nuts and tighten them.

4.2.9 Installation of a measurement chamber

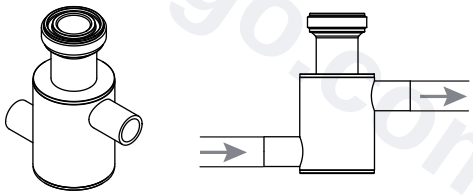

- Install the measurement chamber in the main pipe or in the bypass.
- Pay attention to the flow direction of the fluid indicated by the arrows.
- Screw the G 1/2'' connections to the pipe.

MAN 1000361981 EN Version: D Status: RL (released | freigegeben) printed: 24.08.2026

valvesgo.com

5 Maintenance and troubleshooting

5.1 Safety instructions

DANGER!

Risk of injury due to high pressure in the installation.

- Stop the circulation of fluid, cut off the pressure and drain the pipe before loosening the process connections.

DANGER!

Risk of burns due to high fluid temperatures.

- Do not touch with bare hands the parts of the product that are in contact with the fluid.
- Stop the circulation of fluid and drain the pipe before loosening the process connections.
- Keep all easily flammable fluid or material away from the product.

DANGER!

Risk of injury due to the nature of the fluid.

- Respect the prevailing regulations on accident prevention and safety relating to the use of dangerous fluids.

WARNING!

Risk of injury due to non-conforming maintenance.

- Maintenance must only be carried out by qualified and skilled staff with the appropriate tools.
- Ensure that the restart of the installation is controlled after any interventions.

5.2 Cleaning

CAUTION!

The product may be damaged by the cleaning solution.

- Clean the product with a cloth dampened with water or a detergent compatible with the materials the product is made of.

MAN 1000361981 EN Version: D Status: RL (released | freigegeben) printed: 24.08.2026

valvesgo.com

6 Spare parts and accessories

CAUTION!

Risk of injury and/or damage caused by the use of unsuitable parts.

Incorrect accessories and unsuitable spare parts may cause injuries and damage the product and the surrounding area.

- Use only original accessories and original spare parts from Bürkert.

Sealing plug	Article number
Sealing plug made of stainless steel with union nut and O-ring (EPDM and FKM)	562625
Sealing plug made of in PVC with union nut and O-ring (EPDM and FKM)	562541

Seal set	Article number
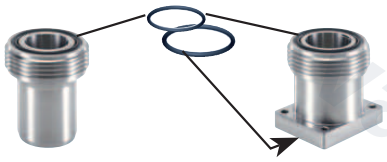	
O-ring made of FKM for metal adaptor	561654
O-ring made of EPDM for metal adaptor	561653

Seal set	Article number
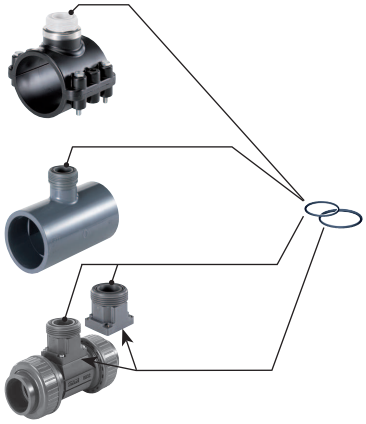	
O-ring made of FKM for plastic adaptor, solvent end fittings and saddle	561399
O-ring made of EPDM for plastic adaptor, solvent end fittings and saddle	561398

MAN 1000361981 EN Version: D Status: RL (released | freigegeben) printed: 24.08.2026

valvesgo.com

valvesgo.com

Seal set	Article number
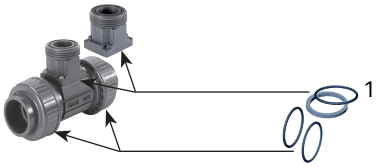	
O-ring[2] made of FKM for plastic adaptor or true union fitting DN15 to 32	431558
O-ring[2] made of FKM for plastic adaptor or true union fitting DN40	431559
O-ring[2] made of FKM for plastic adaptor or true union fitting DN50	431560
O-ring[2] made of EPDM for plastic adaptor or true union fitting DN15 to 32	431564
O-ring[2] made of EPDM for plastic adaptor or true union fitting DN40	431565
O-ring[2] made of EPDM for plastic adaptor or true union fitting DN50	431566

[2] The O-ring is only intented for fitting body with flat bottom groove. The O-ring is not suitable for fitting body with ribbed groove (old variant).

MAN 1000361981 EN Version: D Status: RL (released | freigegeben) printed: 24.08.2026

valvesgo.com

valvesgo.com

7 Logistics

7.1 Transport and storage

- Protect the device against moisture and dirt in the original packaging during transportation and storage.
- Avoid UV radiation and direct sunlight.
- Protect connections from damage with protective caps.
- Observe permitted storage temperature.

7.2 Return

No work or tests will be carried out on the device until a valid Contamination Declaration has been received.

- To return a used device to Bürkert, contact the Bürkert sales office. A return number is required.

7.3 Disposal

Environmentally friendly disposal

- Follow national regulations regarding disposal and the environment.
- Collect electrical and electronic devices separately and dispose of them as special waste.

Further information at country.burkert.com

MAN 1000361981 EN Version: D Status: RL (released | freigegeben) printed: 24.08.2026

valvesgo.com