bürkert
FLUID CONTROL SYSTEMS

Insertion flowmeter with paddle wheel, ELEMENT design

- Up to PN 10, measurement tube size DN 20 to DN 400
- Configurable outputs: one to two transistor outputs and one to two current outputs of 4 mA to 20 mA
- Removable display/configuration module with backlight for showing flow rate and volume with two totalisers
- Automatic calibration via teach-in, inspection of all outputs without the need for volume flow

Product variants described in the data sheet may differ from the product presentation and description.

Can be combined with

Type 8692
Digital electro-pneumatic positioner for integrated mounting on process control valves

Type 2030
2/2-way diaphragm valve with pneumatic plastic actuator (Type CLASSIC)

Type 8644
AirLINE SP electropneumatic automation system

Type 2101
Pneumatically operated 2/2-way globe valve ELEMENT for decentralised automation

Type 8611
eCONTROL – Universal controller

Type S020
Insertion fitting for volume flow rate or analytical measurements

Type 8619
multiCELL – multi-channel/ multi-function transmitter/ controller

Type description

Device Type 8026 is designed especially for flow measurement of particle-free liquids in a variety of applications such as water treatment, wastewater monitoring, chemical processing, and more. Bürkert's proprietary fitting system permits simple installation of the devices into pipelines from DN 20 to DN 400.

The device is available with either 2 configurable outputs (1 transistor output (NPN) and 1 current output 4 mA to 20 mA, 2-wire), or with 3 configurable outputs (2 transistor outputs (NPN/PNP) and 1 current output 4 mA to 20 mA, 2-wire), or with 4 configurable outputs (2 transistor outputs (NPN/PNP) and two 4 mA to 20 mA current outputs, 3-wire).

The device converts the measurement signal, displays various values in different units (if the display/configuration module is installed), and calculates the output signals transmitted via one or two M12 connectors. With the help of either one or two transistor outputs, the measuring device can control an electrical valve, activate an alarm, and establish one or two control loops using one or two current outputs.

DTS 1000128705 EN Version: - Status: RL (released | freigegeben | valide) printed: 06.10.2026

© Christian Bürkert GmbH & Co. KG, Subject to alteration

valvesgo.com

Table of contents

1. General technical data 3

2. Approvals and conformities 5

2.1. General notes 5
2.2. Conformity 5
2.3. Standards 5
2.4. Pressure Equipment Directive (PED) 5
Device used on a pipe 5
2.5. North America (USA/Canada) 5

3. Materials 6

3.1. Bürkert resistApp 6
3.2. Material specifications 6

4. Dimensions 7

4.1. Flowmeter 7
4.2. Flowmeter installed in an Insertion fitting Type S020 8

5. Performance specifications 8

5.1. Pressure temperature diagram 8

6. Product installation 9

6.1. Installation notes 9
Flow measurement 9

7. Product operation 10

7.1. Measuring principle 10

8. Product design and assembly 10

8.1. Product assembly 10

9. Networking and combination with other Bürkert products 11

9.1. Networking and combination of the device 11
9.2. Combination of the device with available Type S020 Insertion fittings DN 11

10. Ordering information 11

10.1. Bürkert eShop 11
10.2. Recommendation regarding product selection 12
10.3. Bürkert product filter 12
10.4. Ordering chart 12
10.5. Ordering chart accessories 13

DTS 1000128705 EN Version: - Status: RL (released | freigegeben | valide) printed: 06.10.2026

valvesgo.com

valvesgo.com

1. General technical data

Note:
If the device is mounted in a humid environment or outside, then the maximum voltage allowed is **35 V DC** instead of 36 V DC.

Product properties	
Material	
Make sure the device materials are compatible with the fluid you are using. Further information can be found in chapter "3.1. Bürkert resistApp" on page 6.	
Further information on the materials can be found in chapter "3.2. Material specifications" on page 6.	
Non-wetted parts	
Cover	Polycarbonate (PC), transparent (opaque on request)
Housing	Stainless steel 1.4404, PPS
Screw	Stainless steel 1.4401 (316 (A4))
Grounding terminal and screw	Stainless steel 1.4301 (304 (A2))
Display/configuration module	PC
Menu key	PBT
Union nut	PC
Seal	EPDM, silicone
Fixed connector holder	PPS CF30
Fixed connector	Nickel-plated brass (stainless steel on request)
Wetted parts	
Sensor armature	PVDF
Axis and bearing	Ceramics (Al_2O_3)
Paddle wheel	PVDF
Seal	FKM standard (EPDM included, but not mounted)
Compatibility	Any pipe from DN 20 [1.)]...DN 400 which is fitted with Bürkert Type S020 Insertion fitting. For the selection of the nominal diameter of the fittings, see **data sheet Type S020** ▶.
Pipe diameter	DN 20 [1.)]...DN 400
Dimensions	Further information can be found in chapter "4. Dimensions" on page 7.
Measuring principle	Paddle wheel
Measuring range	• Flow rate: 0.5...75000 l/min (0.13...19813 gpm) • Flow velocity: 0.3...10 m/s
Product accessory	
Display/configuration module	Grey dot matrix 128 × 64 with backlighting
Performance data	
Measurement deviation	• Teach-in: ± 1 % of the measured value [2.)] at teach-in flow rate value • Standard K factor: ± 2.5 % of the measured value [2.)]
Linearity	± 0.5 % of full scale [2.)]
Repeatability	± 0.4 % of the measured value [2.)]
4...20 mA output uncertainty	± 1 % of current range
Electrical data	
Operating voltage	• 2 or 3 outputs transmitter (2-wire) variant: 14...36 V DC, filtered and regulated • 4 outputs transmitter (3-wire) variant: 12...36 V DC, filtered and regulated Connection to main supply: permanent, through external SELV (Safety Extra Low Voltage) and LPS (Limited Power Source) power supply
Power source (not supplied)	Limited power source according to UL/EN 62368-1 standards or limited energy circuit according to UL/EN 61010-1 paragraph 9.4
DC reverse polarity protection	Yes
Overvoltage protection	Yes
Current consumption	With sensor • ≤ 1 A (with transistors load) • 2 or 3 outputs transmitter (2-wire) variant: ≤ 25 mA (at 14 V DC without transistors load, with current loop) • 4 outputs transmitter (3-wire) variant: ≤ 5 mA (at 12 V DC without transistors load, without current loop)
Power consumption	Max. 40 W

DTS 1000128705 EN Version: - Status: RL (released | freigegeben | valide) printed: 06.10.2026

valvesgo.com

Output	• Transistor (digital output): – 1 transistor output (transmitter 2-wire): – NPN, open collector – max. 700 mA – 1...36 V DC – 2 transistor outputs (transmitter 2 or 3-wire): – adjustable as sourcing or sinking (respectively both as PNP or NPN), open collector – max. 700 mA – 0.5 A max. per transistor if the 2 transistor outputs are wired – NPN-output: 1...36 V DC – PNP-output: Power supply • Current (analogue output): – 4...20 mA – adjustable as sourcing or sinking (in the same mode as transistor) – max. loop impedance: – 1 current output (transmitter 2-wire): 1100 Ω at 36 V DC, 610 Ω at 24 V DC, 180 Ω at 14 V DC – 2 current outputs (transmitter 3-wire): 1100 Ω at 36 V DC, 610 Ω at 24 V DC, 100 Ω at 12 V DC
Voltage supply cable	The female M12 connector and/or the male M12 connector are not included in the delivery and must be ordered separately, see chapter "10.5. Ordering chart accessories" on page 13. For these connectors, use a shielded cable with: • diameter: 3...6.5 mm • cross section of wires: max. 0.75 mm²
Medium data	
Fluid temperature	With fitting Type S020 in: • PVC: 0...+ 50 °C (+ 32...+ 122 °F) • PP: 0...+ 80 °C (+ 32...+ 176 °F) • PVDF, stainless steel or brass: - 15...+ 100 °C (+ 5...+ 212 °F) See **data sheet Type S020** ▶ for more information.
Fluid pressure	Max. PN 10 (145 PSI) See **data sheet Type S020** ▶ for more information.
Viscosity	Max. 300 cSt
Rate of solid particles	Max. 1 %
Maximum particle size	0.5 mm
Product connections	
Process connection	G 2" for use with Type S020 Insertion fitting See **data sheet Type S020** ▶ for more information.
Electrical connection	• 2 or 3 outputs transmitter (2-wire) variant: 1 × 5-pin M12 male connector • 4 outputs transmitter (3-wire) variant: 1 × 5-pin M12 male and 1 × 5-pin M12 female connectors
Approvals and conformities	
Directives	
CE directive	Further information on the CE directive can be found in chapter "2.3. Standards" on page 5.
Pressure equipment directive	Complying with article 4, paragraph 1 of 2014/68/EU directive Further information on the pressure equipment directive can be found in chapter "2.4. Pressure Equipment Directive (PED)" on page 5.
North America (USA/Canada)	UL Recognized for the USA and Canada
Environment and installation	
Ambient temperature	Operation and storage: - 10...+ 60 °C (+ 14...+ 140 °F)
Relative air humidity	≤ 85 %, without condensation
Height above sea level	Max. 2000 m
Operating condition	Continuous
Equipment mobility	Fixed
Application range	Indoor and outdoor Protect the device against electromagnetic interference, ultraviolet rays and, when installed outdoors, against the effects of climatic conditions.

DTS 1000128705 EN Version: - Status: RL (released | freigegeben | valide) printed: 06.10.2026

valvesgo.com

Degree of protection [3.)]	IP65, IP67 (according to EN60529), NEMA 4X (according to NEMA250) under the following simultaneous conditions: • device wired • cover screwed tight • M12 connector mounted and tightened
Installation category	Category I according to UL/EN 61010-1
Pollution degree	Degree 2 according to UL/EN 61010-1

1.) Restricted to some Insertion fitting process connections
2.) Under reference conditions i.e. measuring medium = water, ambient and water temperature = + 20 °C (+ 68 °F), observing the minimum the minimum inlet and outlet sections and the appropriate inner diameter of the pipe.
3.) Not evaluated by UL

2. Approvals and conformities

2.1. General notes

- The approvals and conformities listed below must be stated when making enquiries. This is the only way to ensure that the product complies with all required specifications.
- Not all available variants of the device can be supplied with the below mentioned approvals or conformities.

2.2. Conformity

In accordance with the Declaration of Conformity, the product is compliant with the EU Directives.

2.3. Standards

The applied standards which are used to demonstrate compliance with the EU Directives are listed in the EU-Type Examination Certificate and/or the EU Declaration of Conformity.

2.4. Pressure Equipment Directive (PED)

The device conforms to article 4, paragraph 1 of the Pressure Equipment Directive (PED) 2014/68/EU under the following conditions:

Device used on a pipe

Note:
- The data in the table is independent of the chemical compatibility of the material and the fluid.
- PS = maximum admissible pressure (in bar), DN = nominal diameter of the pipe

Type of fluid	Conditions
Fluid group 1, Article 4, Paragraph 1.c.i	DN ≤ 25
Fluid group 2, Article 4, Paragraph 1.c.i	DN ≤ 32 or PS*DN ≤ 1000
Fluid group 1, Article 4, Paragraph 1.c.ii	DN ≤ 25 or PS*DN ≤ 2000
Fluid group 2, Article 4, Paragraph 1.c.ii	DN ≤ 200 or PS ≤ 10 or PS*DN ≤ 5000

2.5. North America (USA/Canada)

Approval	Description
c US	**Optional: UL Recognized for the USA and Canada** The products are UL Recognized for the USA and Canada according to: • UL 61010-1 (ELECTRICAL EQUIPMENT FOR MEASUREMENT, CONTROL, AND LABORATORY USE – Part 1: General Requirements) • CAN/CSA-C22.2 No. 61010-1

DTS 1000128705 EN Version: - Status: RL (released | freigegeben | valide) printed: 06.10.2026

valvesgo.com

3. Materials

3.1. Bürkert resistApp

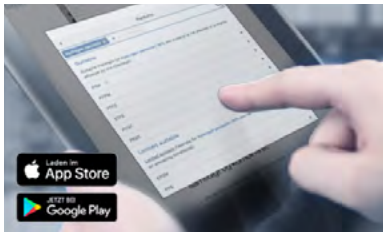

Bürkert resistApp – Chemical resistance chart

You want to ensure the reliability and durability of the materials in your individual application case? Verify your combination of media and materials on our website or in our resistApp.

Start chemical resistance check

3.2. Material specifications

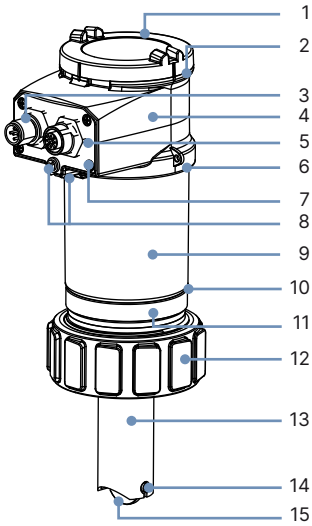

No.	Element	Material
1	Cover	PC
2	Seal	Silicone
3	Circular connector (female /male M12)	Nickel-plated brass
4	Housing (top)	PPS
5	Connector holder	PPS CF30
6	Seal	EPDM
7	Screws	Stainless steel 1.4301 (304 (A2))
8	Grounding terminal and screw	Stainless steel 1.4401 (316 (A4))
9	Housing (body)	Stainless steel
10	Seal	EPDM
11	Housing (base)	PPS
12	Union nut	PC
13	Sensor armature	PVDF
14	Axis and bearing	Ceramics (Al_2O_3)
15	Paddle wheel	PVDF

DTS 1000128705 EN Version: - Status: RL (released | freigegeben | valide) printed: 06.10.2026

valvesgo.com

4. Dimensions

4.1. Flowmeter

Note:

- Dimensions in mm, unless otherwise stated
- The length of the flow probe depends on the used Insertion fitting Type S020 and its nominal diameter, see **data sheet Type S020** ▶ for more information.

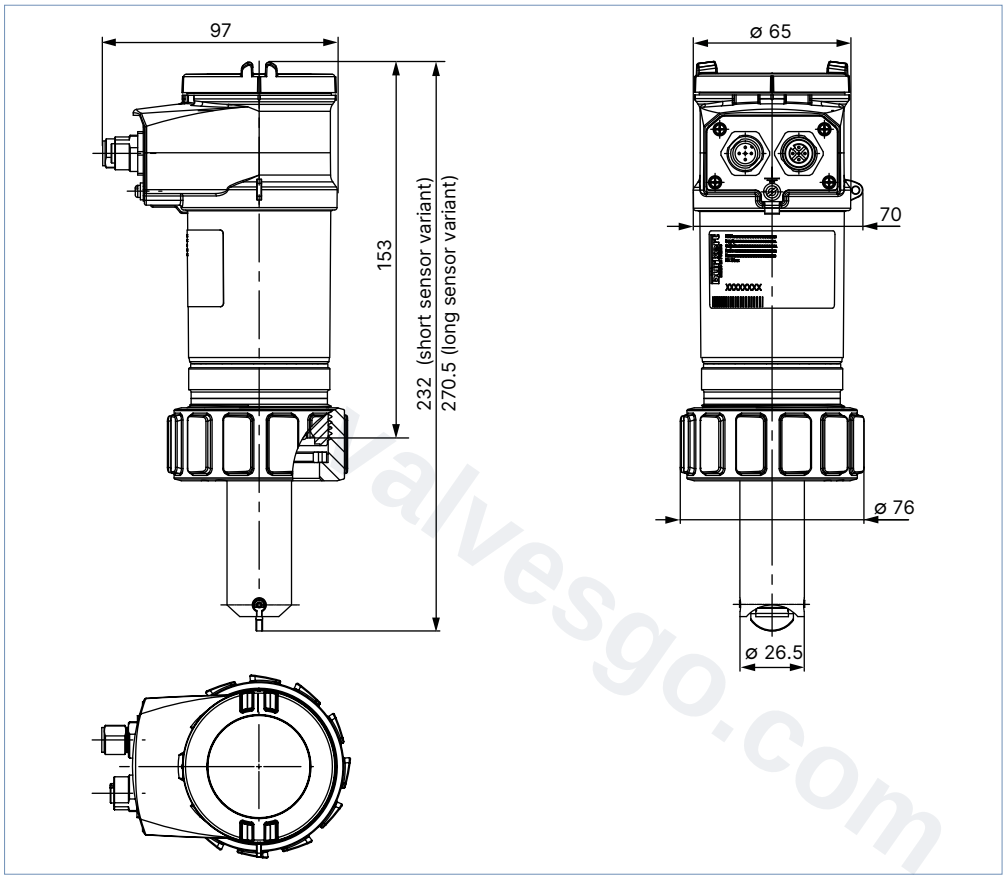

DTS 1000128705 EN Version: - Status: RL (released | freigegeben | valide) printed: 06.10.2026

valvesgo.com

4.2. Flowmeter installed in an Insertion fitting Type S020

Note:
Dimensions in mm, unless otherwise stated

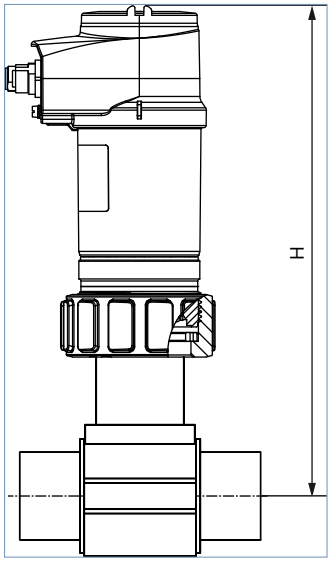

DN	H			
	T-Fitting	Saddle	Plastic spigot	Metal spigot
20	231.5	–	–	–
25	231.5	–	–	–
32	234.5	–	–	–
40	238.5	–	–	–
50	244.5	269.5	–	239.5
65	244.5	267.5	252.5	245.5
80	–	272.5	258.5	250.5
100	–	277.5	265.5	260.5
110	–	273.5	–	–
125	–	280.5	300.5	271.5
150	–	250.5	307.5	282.5
180	–	314.5	–	–
200	–	326.5	328.5	303.5
250	–	–	346.5	363.5
300	–	–	358.5	382.5
350	–	–	371.5	394.5
400	–	–	386.5	–

5. Performance specifications

5.1. Pressure temperature diagram

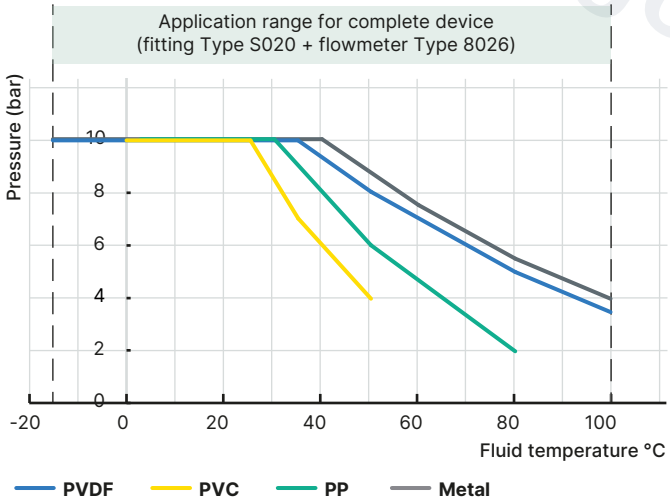

DTS 1000128705 EN Version: - Status: RL (released | freigegeben | valide) printed: 06.10.2026

valvesgo.com

6. Product installation

6.1. Installation notes

Flow measurement

Note:
The device is not suitable for use in gaseous media and steam.

Minimum straight distances upstream and downstream of the sensor must be observed. These stabilizing distances depend on the pipe's design. Increasing these distances or installing a flow conditioner may be necessary to obtain the best accuracy. Fore more information, refer to EN ISO 5167-1.

EN ISO 5167-1 specifies the straight inlet and outlet distances that must be complied with when installing fittings in pipe lines in order to achieve calm flow conditions. The most commonly used elements that could lead to turbulence in the flow are shown below. The related minimum inlet and outlet distances that ensure a calm flow are also specified.

Make sure that the measuring conditions at the point of measurement are calm and problem-free.

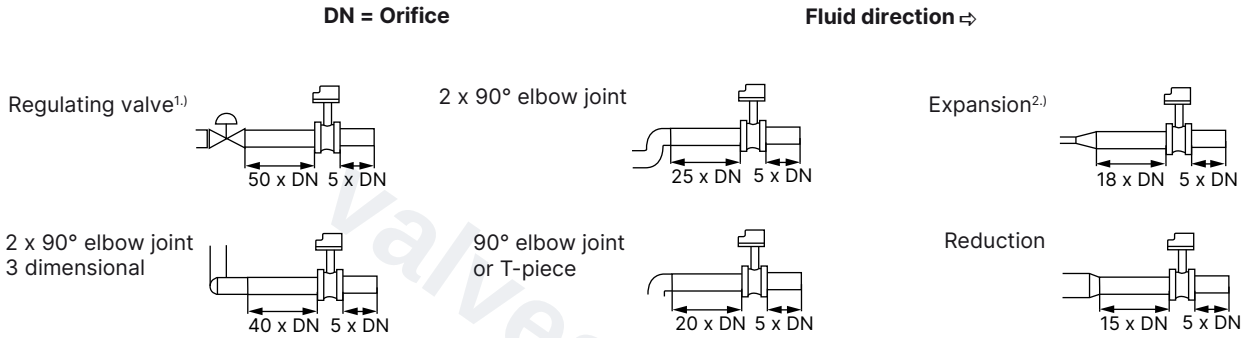

1.) If the valve cannot be mounted after the measuring device, the minimal distances have to be respected.
2.) If an expansion cannot be avoided, the minimal distances have to be respected.
Please note minimum flow velocity

The device can be installed in either horizontal or vertical pipes, but following additional conditions should be respected:

- The pipe always has to be filled with fluid at all times near the device.
- The pipe design must be such that no air bubbles or cavitation can form within the medium near the device at any time.

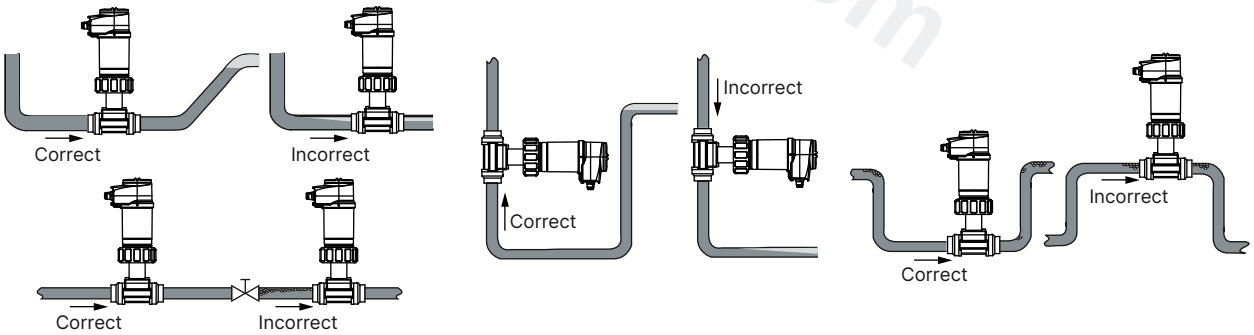

Pressure and temperature ratings must be respected according to the selected fitting material. The suitable pipe size is selected using the diagram in the chapter "Nominal size selection" of the **data sheet Type S020** ▶.

DTS 1000128705 EN Version: - Status: RL (released | freigegeben | valide) printed: 06.10.2026

valvesgo.com

7. Product operation

7.1. Measuring principle

When liquid flows through the pipe, the paddle wheel with 4 inserted magnets is set in rotation, producing a measuring signal in the sensor (Hall sensor). The frequency modulated induced voltage is proportional to the flow velocity of the fluid.
A K factor, specific to each pipe, enables the conversion of this frequency into a flow rate/volume.
This K factor is available in the fittings' operating instructions, see **Type S020** ▶.

The electronic component converts the measured signal into several outputs (according to the device variant) and displays the actual value.
Totalizers are used to obtain the volume of fluid passed through the pipe.
The electrical connection is provided via a male connector or via male connector M12 and a female connector M12, depending on variant.

8. Product design and assembly

8.1. Product assembly

Note:

- The device Type 8026 is installed into a Bürkert Insertion fitting Type S020 and fastened with a union nut.
- The Insertion fitting Type S020 ensures simple installation into pipes from DN 20...DN 400, see **data sheet Type S020** ▶ for more information.

The device is equipped with a sensor with a paddle wheel, available in long or short variant (depending on the size of the used fitting). The sensor armature, which cannot be dismantled, is plugged-in and pinned to a housing, which contains the electronics board and a removable display/configuration module.

The device operates without the display/configuration module, but it is required for device configuration (i.e. set or restore parameters, configure information to be displayed, enter access codes...) and also for visualizing continuously the measured and processed data.

DTS 1000128705 EN Version: - Status: RL (released | freigegeben | valide) printed: 06.10.2026

valvesgo.com

9. Networking and combination with other Bürkert products

9.1. Networking and combination of the device

Example:

Type 8026

Type S020 ▸	Type 8801 ▸	Type 0142 ▸	Type 8611 ▸	Type 8619 ▸
Insertion fitting for flow or analysis measurements	Valve system On/Off ELEMENT	Diaphragm valve 2/2-way servo-assisted	eCONTROL - Universal controller	multiCELL - transmitter/controller

9.2. Combination of the device with available Type S020 Insertion fittings DN

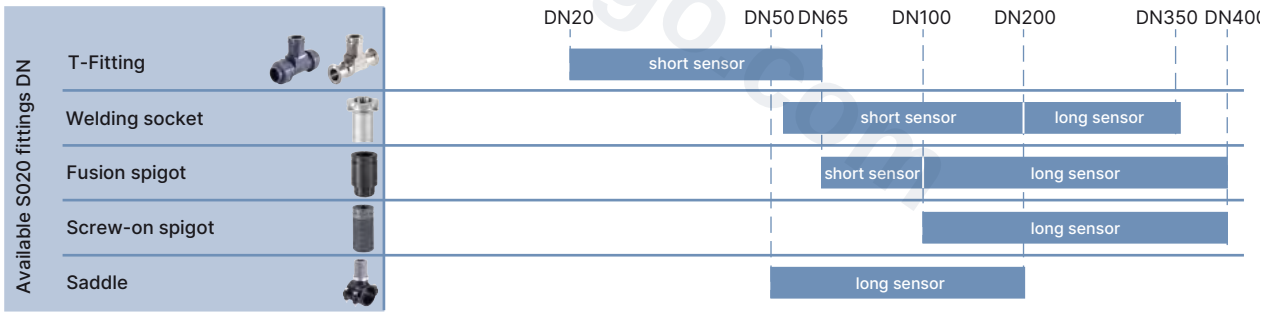

10. Ordering information

10.1. Bürkert eShop

Bürkert eShop – Easy ordering and quick delivery

You want to find your desired Bürkert product or spare part quickly and order directly? Our online shop is available for you 24/7. Sign up and enjoy all the benefits.

Order online now

DTS 1000128705 EN Version: - Status: RL (released | freigegeben | valide) printed: 06.10.2026

valvesgo.com

10.2. Recommendation regarding product selection

Note:
When only ordering devices without a display/configuration module, make sure that you have at least one display/configuration module to configure the device. Otherwise you must also order one (see chapter "10.5. Ordering chart accessories" on page 13).

A complete flow measurement equipment consists of a ELEMENT flowmeter Type 8026, a removable display/configuration module and a Bürkert Insertion fitting Type S020.

See **data sheet Type S020** ▶ for more information.

Two or three different components must be ordered to obtain a complete device. The following information is required:

- **Article no.** of the desired flowmeter Type 8026 available with or without display/configuration module (see chapter "10.4. Ordering chart" on page 12)
- **Article no.** of the removable display/configuration module, if necessary (see chapter "10.5. Ordering chart accessories" on page 13)
- **Article no.** of the selected Type S020 Insertion fitting (see **data sheet Type S020** ▶)

10.3. Bürkert product filter

Bürkert product filter – Get quickly to the right product

You want to select products comfortably based on your technical requirements?
Use the Bürkert product filter and find suitable articles for your application quickly and easily.

Try out our product filter

10.4. Ordering chart

Note:

- All settings as well as the digital output have to be configured with the display/configuration module (must be ordered separately).
- The following article no.s. have a transparent cover as standard.
- The following is supplied with every device: FKM seal as standard (already mounted), 1 set with a green FKM seal and a black EPDM seal and a mounting instruction sheet.

Operating voltage	Sensor variant	Output	UL approval	Electrical connection [1.)]	Article no.	
					Without display/ configuration module	With display/ configuration module
14...36 V DC	Short	2 outputs: 1 x transistor NPN + 1 × 4...20 mA (2 wires)	–	5-pin M12 male connector	560860	561860
			UL Recognized		560863	561863
	Long		–		560870	561870
			UL Recognized		560873	561873
	Short	3 outputs: 2 x transistors NPN/PNP + 1 × 4...20 mA (2 wires)	–		560861	561861
			UL Recognized		560864	561864
	Long		–		560871	561871
			UL Recognized		560874	561874
12...36 V DC	Short	4 outputs: 2 x transistors NPN/PNP + 2 × 4...20 mA (3 wires)	–	5-pin M12 male and 5-pin M12 female connectors	560862	561862
			UL Recognized		560865	561865
	Long		–		560872	561872
			UL Recognized		560875	561875

1.) Must be ordered separately (see chapter "11.5. Ordering chart accessories" on page 10): M12 male/female connectors (only 1 M12 female for the variant with one 4...20 mA output, 1 M12 male and 1 M12 female for the variant with two 4...20 mA outputs of the device)

DTS 1000128705 EN Version: - Status: RL (released | freigegeben | valide) printed: 06.10.2026

valvesgo.com

10.5. Ordering chart accessories

Description	Article no.
Spare part	
Opaque cover with seal (1 screw cover with EPDM seal + 1 quarter turn closing cover with silicone seal)	560948
Transparent cover with seal (1 screw cover with EPDM seal + 1 quarter turn closing cover with silicone seal)	561843
Mounting accessory	
Fastening ring (open) for Type S020 Insertion fitting	619205
PC union nut for Type S020 Insertion fitting	619204
Electrical connection	
M12 female connector with plastic threaded clamping ring, 5-pin, straight, to be wired	917116
M12 male connector with plastic threaded clamping ring, 5-pin, straight, to be wired	560946
M12 female connector with moulded cable (shielded), 5-pin, straight, cable length: 2 m	438680
M12 male connector with moulded cable (shielded), 5-pin, straight, cable length: 2 m	559177
Configuration accessory	
Removable display/configuration module (with instruction sheet)	559168

DTS 1000128705 EN Version: - Status: RL (released | freigegeben | valide) printed: 06.10.2026

valvesgo.com

valvesgo.com